U.2 (SFF-8639) PCIe SSD ER-1 DWPD 1.2 Datasheet

(SQF-CU2xx-xxxGDG1x)

CONTENTS

Safety Instructions 4
Consignes de sécurité 4
1. Overview 5
2. Features 6
3. Specification Table 7
4. General Description 10
5. Pin Assignment and Description 13
6. SMART Atrributes 15
7. System Power Consumption 17
8. Physical Dimension 18
Appendix: Part Number Table 19

Revision History

Rev.	Date	History
0.1	2022/8/10	1. Preliminary release
0.2	2022/9/27	1. Update description

Advantech reserves the right to make changes without further notice to any products or data herein to improve reliability, function, or design. Information furnished by Advantech is believed to be accurate and reliable. However, Advantech does not assure any liability arising out of the application or use of this information, nor the application or use of any product or circuit described herein, neither does it convey any license under its patent rights nor the rights of others.
Copyright © 1983-2021 Advantech Co., Ltd. All rights reserved.

Safety Instructions

1. Read these safety instructions carefully.
2. Keep this User Manual for later reference.
3. Disconnect this equipment from any AC outlet before cleaning. Use a damp cloth. Do not use liquid or spray detergents for cleaning.
4. For plug-in equipment, the power outlet socket must be located near the equipment and must be easily accessible.
5. Keep this equipment away from humidity.
6. Put this equipment on a reliable surface during installation. Dropping it or letting it fall may cause damage.
7. The openings on the enclosure are for air convection. Protect the equipment from overheating. DO NOT COVER THE OPENINGS.
8. Make sure the voltage of the power source is correct before connecting the equipment to the power outlet.
9. Position the power cord so that people cannot step on it. Do not place anything over the power cord.
10. All cautions and warnings on the equipment should be noted.
11. If the equipment is not used for a long time, disconnect it from the power source to avoid damage by transient overvoltage.
12. Never pour any liquid into an opening. This may cause fire or electrical shock.
13. Never open the equipment. For safety reasons, the equipment should be opened only by qualified service personnel.
14. If one of the following situations arises, get the equipment checked by service personnel:
    - The power cord or plug is damaged.
    - Liquid has penetrated the equipment.
    - The equipment has been exposed to moisture.
    - The equipment does not work well, or you cannot get it to work according to the user's manual.
    - The equipment has been dropped and damaged.
    - The equipment has obvious signs of breakage.
15. DO NOT LEAVE THIS EQUIPMENT IN AN ENVIRONMENT WHERE THE STORAGE TEMPERATURE MAY GO BELOW -20° C (-4° F) OR ABOVE 60° C (140° F). THIS COULD DAMAGE THE EQUIPMENT. THE EQUIPMENT SHOULD BE IN A CONTROLLED ENVIRONMENT.
16. CAUTION: DANGER OF EXPLOSION IF BATTERY IS INCORRECTLY REPLACED. REPLACE ONLY WITH THE SAME OR EQUIVALENT TYPE RECOMMENDED BY THE MANUFACTURER, DISCARD USED BATTERIES ACCORDING TO THE MANUFACTURER'S INSTRUCTIONS.

Consignes de sécurité

1. Lisez attentivement ces instructions de sécurité.
2. Conservez ce manuel pour référence ultérieure.
3. Débranchez cet appareil de toute prise secteur avant le nettoyage. Utilisez un chiffon humide. Ne pas utiliser de détergents liquides ou en aérosol pour le nettoyage
4. Pour les équipements enfichables, la prise de courant doit être située près de l'équipement et doit être facilement accessible.
5. Gardez cet équipement à l'abri de l'humidité.
6. Placez cet équipement sur une surface fiable lors de l'installation. Le laisser tomber ou le laisser tomber peut causer des dommages.
7. Les ouvertures sur l'enceinte sont destinées à la convection de l'air. Protégez l'équipement de la surchauffe. NE COUVREZ PAS LES OUVERTURES.
8. Assurez-vous que la tension de la source d'alimentation est correcte avant de connecter l'équipement à la prise de courant.
9. Positionnez le cordon d'alimentation de sorte que personne ne puisse marcher dessus. Ne placez rien sur le cordon d'alimentation.
10. Toutes les mises en garde et avertissements sur l'équipement doivent être notés..
11. Si l'appareil n'est pas utilisé pendant une longue période, débranchez-le de la source d'alimentation pour éviter tout dommage dû à une surtension transitoire.
12. Ne jamais verser de liquide dans une ouverture. Cela pourrait provoquer un incendie ou un choc électrique.
13. N'ouvrez jamais l'équipement. Pour des raisons de sécurité, l'équipement ne doit être ouvert que par du personnel qualifié.
14. Si l'une des situations suivantes se produit, faites vérifier l'équipement par le personnel de service:l:
    - Le cordon d'alimentation ou la fiche est endommagé Liquid has penetrated the equipment.
    - L'équipement a été exposé à l'humidité.
    - L'équipement ne fonctionne pas bien ou vous ne pouvez pas le faire fonctionner conformément au manuel d'utilisation..
    - L'équipement est tombé et endommagé..
    - L'équipement présente des signes évidents de rupture.
15. NE PAS LAISSER CET APPAREIL DANS UN ENVIRONNEMENT O LA TEMPÉRATURE DE STOCKAGE PEUT ÊTRE INFÉRIEURE À -20 ° C (-4 ° F) OU SUPÉRIEURE À 60 ° C (140 ° F). CELA POURRAIT ENDOMMAGER L'ÉQUIPEMENT. L'ÉQUIPEMENT DOIT ÊTRE DANS UN ENVIRONNEMENT CONTRÔLÉ.
16. ATTENTION: DANGER D'EXPLOSION EN CAS DE REMPLACEMENT INCORRECT DE LA PILE. REMPLACEZ UNIQUEMENT AVEC LE MÊME TYPE OU LE TYPE ÉQUIVALENT RECOMMANDÉ PAR LE FABRICANT, DÉJETTEZ LES PILES UTILISÉES SELON LES INSTRUCTIONS DU FABRICANT.

1. Overview

Advantech SQFlash ER-1 series U.2 PCIe SSD (Solid State Drive) is an NVM Express SSD designed as the standard PCIe SFF-8639 form factor with PCIe interface and 3D TLC NAND Flash. SQFlash ER-1 supports PCIe Gen 4 x4, and it is compliant with NVMe 1.4 providing excellent performance. SQFlash ER-1 with sophisticated error detection and correction (ECC) functions, the module can ensure full End-to-end Data Path Protection that secures the data transmission between host system and NAND Flash.

In addition, SQFlash ER-1 series provides ultra-speed and high IOPS and offers maximum capacity up to 6.4TB, making the SSD optimal for server and heavy data workload applications.

2. Features

- **PCIe Interface**
  - Compliant with NVMe1.4
  - PCIe Express Base Ver 4.0
  - PCIe Gen 4 x 4 lane & backward compatible to PCIe Gen3, Gen 2 and Gen 1
  - Support power management
- **Operating Voltage：12.0V**
- **Support fourth LDPC generation of ECC algorithm**
- **AES256、TCG-OPAL、TRIM supported**
- **Temperature Ranges[1]**
  - Commercial Temperature
    - 0℃ to 70℃ for operating
    - -40℃ to 85℃ for storage
  - Industrial Temperature
    - -40℃ to 85℃ for operating
    - -40℃ to 85℃ for storage

  *Note : 1. Based on SMART Attribute (Byte index [2 :1] of PCIe-SIG standard, which measured by thermal sensor
- **Mechanical Specification**
  - Shock：1,500G / 0.5ms
  - Vibration：20G / 7~2,000Hz
- **Humidty**
  - Humidity：up to 95% on 40℃
- **Acquired RoHS、WHQL、CE、FCC Certificate**
- **Acoustic：0 dB**
- **Dimension (w/ heatsink)：100.0 mm x 69.85 mm x 15 mm**

3. Specification Table

■ Performance

		Sequential (MB/sec)		Random (IOPS @4K)	
		Read	Write	Read	Write
3D TLC (BiCS5)	400 GB	5,500	2,200	446K	571K
	800 GB	6,900	3,700	778K	739K
	1600 GB	6,700	5,700	779K	761K
	3200 GB	6,400	6,000	767K	780K
	6400 GB	6,400	5,700	756K	759K

Note. Performance results are based on CrystalDiskMark 7.0.0 with file size 1000MB of Queue Depth 32.

■ Sustain Performance

		Steady Sequential (MB/sec)	
		Read	Write
3D TLC (BiCS5)	400 GB	2,900	404
	800 GB	4,500	736
	1600 GB	4,200	1,200
	3200 GB	3,600	1,000
	6400 GB	TBD	TBD

Note. Sustain Performance based on Linux FIO Test Result.

■ Latency (QD1)

		Sequential (us)		Random (us)	
		Read	Write	Read	Write
3D TLC (BiCS5)	400 GB	10	9	10	70
	800 GB	10	9	10	70
	1600 GB	10	9	10	71
	3200 GB	10	9	10	89
	6400 GB	TBD	TBD	TBD	TBD

Note. Latency measured using 4KB(4,096 Bytes) transfer size with Queue Depth equal to 1 on a sequential and random workload

■ Quality of Service (QoS)

		Quality of Service[1,2] (99.9%) (ms)	
		Read Queue Depth 1	**Write Queue Depth 1**
3D TLC (BiCS5)	400 GB	0.02	0.08
	800 GB	0.02	0.08
	1600 GB	0.02	0.08
	3200 GB	0.02	0.1
	6400 GB	TBD	TBD

Note.

1. Quality of Service measured using 4KB (4,096 bytes) transfer size on a random workload on a full Logical Block Address (LBA) span of the drive once the workload has reached steady state but including all background activities required for normal operation and data reliability.

2. Based on Random 4KB QD=1 workloads, measured as the time taken for 99.9 percentile of commands to finish the round-trip from host to drive and back to host.

■ Endurance

JEDEC defined an endurance rating TBW (TeraByte Written), following by the equation below, for indicating the number of terabytes a SSD can be written which is a measurement of SSDs' expected lifespan, represents the amount of data written to the device.

TBW = [(NAND Endurance) x (SSD Capacity)] / WAF

- **NAND Endurance**: Program / Erase cycle of a NAND flash.
  - 3D TLC (BiCS3/ BiCS4/ BiCS5): 3,000 cycles
- **SSD Capacity**: SSD physical capacity in total of a SSD.
- **WAF**: Write Amplification Factor (WAF), as the equation shown below, is a numerical value representing the ratio between the amount of data that a SSD controller needs to write and the amount of data that the host's flash controller writes. A better WAF, which is near to 1, guarantees better endurance and lower frequency of data written to flash memory.

WAF = (Lifetime write to flash) / (Lifetime write to host)

- **Endurance measurement is based on JESD218 Test method and JESD219A Workload, tested by ULINK**

3D TLC (BiCS5)	Enterprise workload
400 GB	855
800 GB	1,710
1600 GB	3,421
3200 GB	6,843
6400 GB	13,687

Note.

1. Sequential: Mainly sequential write are estimated by PassMark Burnin Test v8.1 pro.

2. Client: Follow JESD218 Test method and JESD219A Workload, tested by ULINK. (The capacity lower than 64GB client workload is not specified in JEDEC219A, the values are estimated.)

3. Based on out-of-box performance.

4. Current TBW Values are for reference only. Actual figures will be released after MP.

4. General Description

Error Detection and Correction

Flash memory cells will deteriorate with use, which might generate random bit errors in the stored data. Thus, SQFlash ER-1 series PCIe SSD is designed with hardware LDPC ECC engine with hard-decision and soft-decision decoding. Low-density parity-check (LDPC) codes have excellent error correcting performance close to the limit when decoded with the belief-propagation (BP) algorithm using soft-decision information.

Wear Leveling

NAND flash devices can only undergo a limited number of program/erase cycles, and in most cases, the flash media are not used evenly. If some areas get updated more frequently than others, the lifetime of the device would be reduced significantly. Thus, Wear Leveling is applied to extend the lifespan of NAND Flash by evenly distributing write and erase cycles across the media.

SQFlash provides advanced Wear Leveling algorithm, which can efficiently spread out the flash usage through the whole flash media area. Moreover, by implementing both dynamic and static Wear Leveling algorithms, the life expectancy of the NAND flash is greatly improved.

Bad Block Management

Bad blocks are blocks that include one or more invalid bits, and their reliability is not guaranteed. Blocks that are identified and marked as bad by the manufacturer are referred to as “Initial Bad Blocks”. Bad blocks that are developed during the lifespan of the flash are named “Later Bad Blocks”. SQFlash implements an efficient bad block management algorithm to detect the factory-produced bad blocks and manages any bad blocks that appear with use. This practice further prevents data being stored into bad blocks and improves the data reliability.

Garbage Collection / TRIM

Garbage collection and TRIM technology is used to maintain data consistency and perform continual data cleansing on SSDs. It runs as a background process, freeing up valuable controller resources while sorting good data into available blocks, and deleting bad blocks. It also significantly reduces write operations to the drive, thereby increasing the SSD’s speed and lifespan.

SMART

SMART, an acronym for Self-Monitoring, Analysis and Reporting Technology, is an open standard that allows a hard disk drive to automatically detect its health and report potential failures. When a failure is recorded by SMART, users can choose to replace the drive to prevent unexpected outage or data loss. Moreover, SMART can inform users of impending failures while there is still time to perform proactive actions, such as copy data to another device.

Over-Provision

Over Provisioning refers to the inclusion of extra NAND capacity in a SSD, which is not visible and cannot be used by users. With Over Provisioning, the performance and IOPS (Input/Output Operations per Second) are improved by providing the controller additional space to manage P/E cycles, which enhances the reliability and endurance as well. Moreover, the write amplification of the SSD becomes lower when the controller writes data to the flash.

Thermal Throttling

Thermal Throttling function is for protecting the drive and reducing the possibility of read / write error due to overheat. The temperature is monitored by the thermal sensor. As the operating temperature continues to increase to threshold temperature, the Thermal Throttling mechanism is activated. At this time, the performance of the drive will be significantly decreased to avoid continuous heating. When the operating temperature falls below threshold temperature, the drive can resume to normal operation.

SLC Cache

SQFlash ER-1 series adopt hybrid mode which enables SLC Cache up to 3% of total user capacity followed by TLC direct write to strike balance between burst performance and steady overall stability. The SLC Cache buffer size are defined as table below.

3D TLC (BiCS5)	SLC cache (GB)	SLC cache (%)
400 GB	15.36	3
800 GB	30.72	3
1600 GB	61.44	3
3200 GB	122.88	3
6400 GB	214.62	3

■ Block Diagram

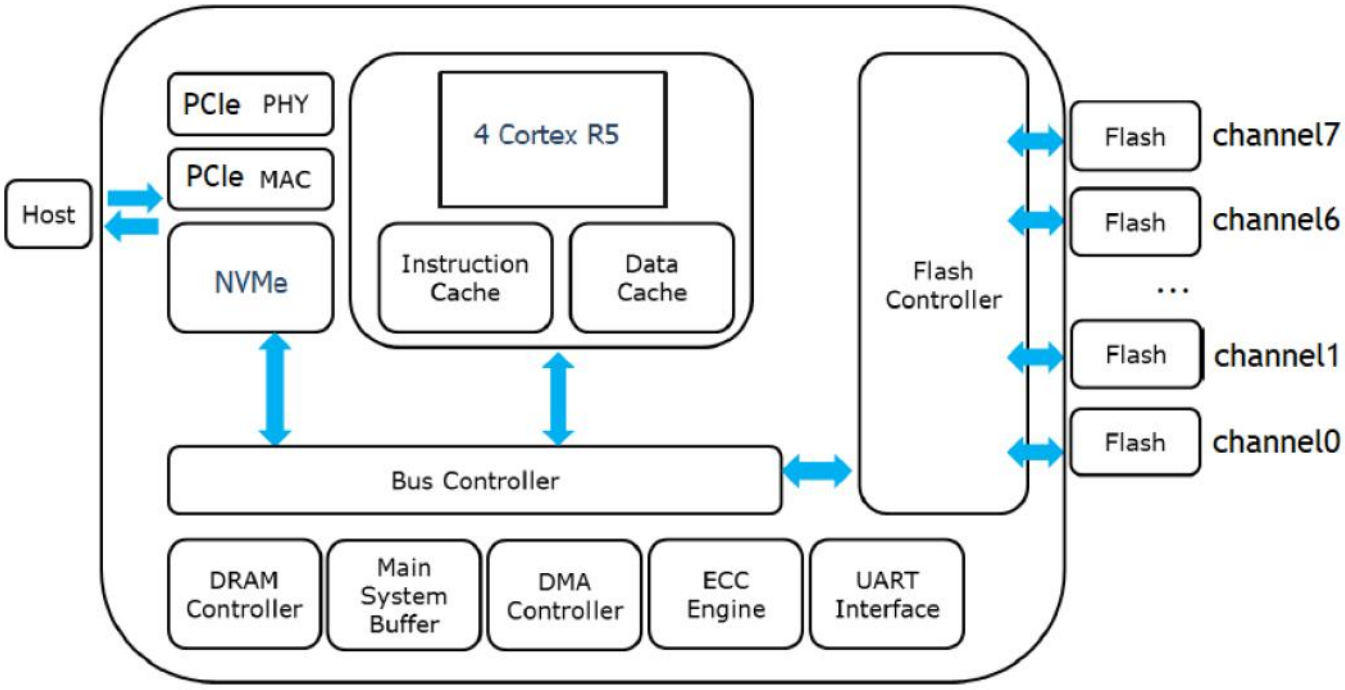

■ LBA value

Density (GB)	LBA
400	781,422,768
800	1,562,824,368
1600	3,125,627,568
3200	6,251,233,968
6400	12,502,446,768

5. Pin Assignment and Description

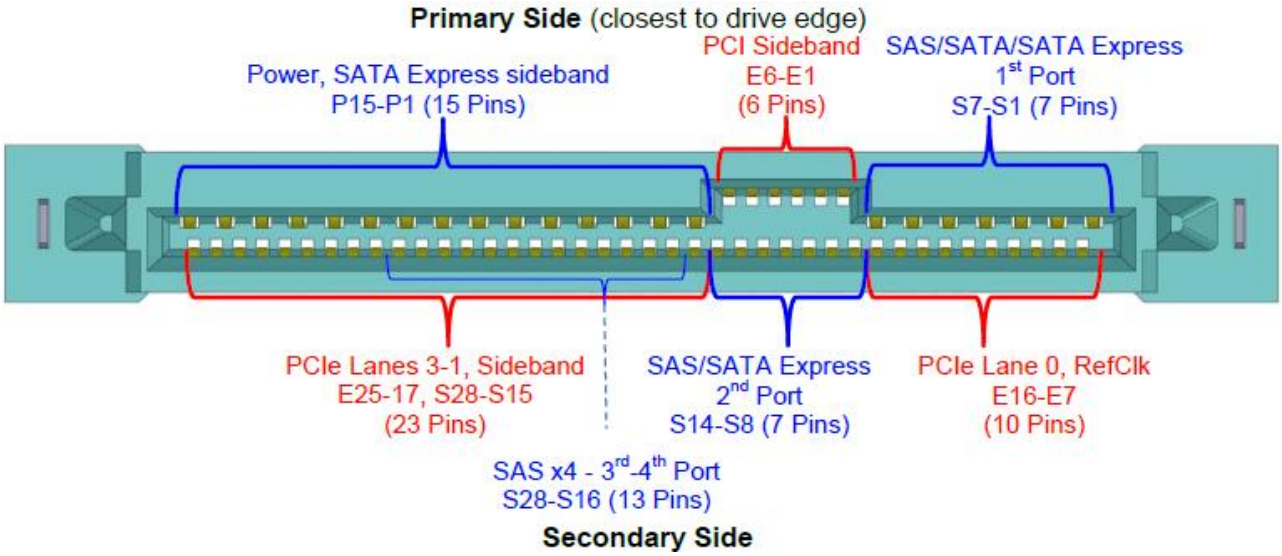

Pin Number	Name	Type	Description
Power Segment			
P1	WAKE#	Input	Signal for Link reactivation
P2	-	-	Outside scope of this specification
P3	PWRDIS	-	PWRDIS
P4	IfDet#	Input	Interface Type Detect
P5	Ground	Ground	Ground
P6	Ground	Ground	Ground
P7	-	-	
P8	-	-	
P9	-	-	
P10	-	-	
P11	Activity #	Input	
P12	Ground	Ground	Ground
P13	+12V Precharge	Power	+12V Precharge power for SFF-8639 module
P14	+12V	Power	+12V power for SFF-8639 module
P15	+12V	Power	+12V power for SFF-8639 module
Signal Segment (SATA / SATA Express / SAS)			
S1	Ground	Ground	Ground
S2	-	-	
S3	-	-	
S4	Ground	Ground	Ground
S5	-	-	
S6	-	-	
S7	Ground	Ground	Ground
S8	Ground	Ground	Ground
S9	-	-	
S10	-	-	
S11	Ground	Ground	Ground
S12	-	-	
S13	-	-	
S14	Ground	Ground	Ground
S15	-	-	

S16	Ground	Ground	Ground
S17	PETp1	Diff-Pair	Transmitter differential pair, Lane 1
S18	PETn1	Diff-Pair	Transmitter differential pair, Lane 1
S19	Ground	Ground	Ground
S20	PERn1	Diff-Pair	Receiver differential pair, Lane 1
S21	PERp1	Diff-Pair	Receiver differential pair, Lane 1
S22	Ground	Ground	Ground
S23	PETp2	Diff-Pair	Transmitter differential pair, Lane 2
S24	PETn2	Diff-Pair	Transmitter differential pair, Lane 2
S25	Ground	Ground	Ground
S26	PERn2	Diff-Pair	Receiver differential pair, Lane 2
S27	PERp2	Diff-Pair	Receiver differential pair, Lane 2
S28	Ground	Ground	Ground
Signal Segment (PCIe)			
E1	-	-	
E2	-	-	
E3	-	-	
E4	-	-	
E5	PERST#	Output	Fundamental reset (if dual-port enabled, first X2 port)
E6	-	-	
E7	REFCLK+	Diff-Pair	Reference clock (if dual-port enabled, first X2 port)
E8	REFCLK-	Diff-Pair	Reference clock (if dual-port enabled, first X2 port)
E9	Ground	Ground	Ground
E10	PETp0	Diff-Pair	Transmitter differential pair, Lane 0
E11	PETn0	Diff-Pair	Transmitter differential pair, Lane 0
E12	Ground	Ground	Ground
E13	PERn0	Diff-Pair	Receiver differential pair, Lane 0
E14	PERp0	Diff-Pair	Receiver differential pair, Lane 0
E15	Ground	Ground	Ground
E16	-	-	
E17	PETp3	Diff-Pair	Transmitter differential pair, Lane 3
E18	PETn3	Diff-Pair	Transmitter differential pair, Lane 3
E19	Ground	Ground	Ground
E20	PERn3	Diff-Pair	Receiver differential pair, Lane 3
E21	PERp3	Diff-Pair	Receiver differential pair, Lane 3
E22	Ground	Ground	Ground
E23	-	-	
E24	-	-	
E25	-	-	

6. SMART Atrributes

ID	ATTRIBUTE_NAME	Log Identifier	# of Bytes	Byte index	Unit
01h	Critical Warning	02h	1	[0]	-
02h	Composite Temperature	02h	2	[2:1]	°K
03h	Available Spare	02h	1	[3]	%
04h	Available Spare Threshold	02h	1	[4]	%
05h	Percentage Used	02h	1	[5]	%
06h-10h	Reserved	02h		[31:6]	
11h	Data Units Read	02h	16	[47:32]	1000 Sectors
12h	Data Units Written (Host Write)	02h	16	[63:48]	1000 Sectors
13h	Host Read Commands	02h	16	[79:64]	count
14h	Host Write Commands	02h	16	[95:80]	count
15h	Controller Busy Time	02h	16	[111:96]	mins
16h	Power Cycles	02h	16	[127:112]	count
17h	Power on Hours	02h	16	[143:128]	hours
18h	Unsafe Shutdowns	02h	16	[159:144]	count
19h	Media and Data Integrity Errors	02h	16	[175:160]	times
1Ah	Number of Error Information Log Entries	02h	16	[191:176]	count
1Bh	Warning Composite Temperature Time	02h	4	[195:192]	mins
1Ch	Critical Composite Temperature Time	02h	4	[199:196]	mins
1Dh	Temperature Sensor 1	02h	2	[201:200]	°K
1Eh	Temperature Sensor 2	02h	2	[203:202]	°K
1Fh	Temperature Sensor 3	02h	2	[205:204]	°K
20h	Temperature Sensor 4	02h	2	[207:206]	°K
21h	Temperature Sensor 5	02h	2	[209:208]	°K
22h	Temperature Sensor 6	02h	2	[211:210]	°K
23h	Temperature Sensor 7	02h	2	[213:212]	°K
24h	Temperature Sensor 8	02h	2	[215:214]	°K
25h	Thermal Management Temperature 1 Transition Count	02h	4	[219:216]	count
26h	Thermal Management Temperature 2 Transition Count	02h	4	[223:220]	count
27h	Total Time for Thermal Management Temperature 1:	02h	4	[227:224]	Second
28h	Total Time for Thermal Management Temperature 2:	02h	4	[231:228]	Second
29h-4Fh	Reserved	02h		[511:232]	
50h	Flash Read Sector	C0h	8	[7:0]	sector
51h	Flash Write Sector	C0h	8	[15:8]	sector
52h	UNC Error	C0h	8	[23:16]	count
53h	PHY Error	C0h	4	[27:24]	count
54h	Early Bad Block	C0h	4	[31:28]	count
55h	Later Bad Block	C0h	4	[35:32]	count

56h	Max Erase Count	C0h	4	[39:36]	count
57h	Average Erase Count	C0h	4	[43:40]	count
58h	Current Percent Spares	C0h	8	[51:44]	%
59h	Current Temperature	C0h	2	[53:52]	°K
5Ah	Lowest Temperature	C0h	2	[55:54]	°K
5Bh	Highest Temperature	C0h	2	[57:56]	°K
5Ch	Current Controller Temperature	C0h	2	[61:60]	°K
5Dh	Spare Blocks	C0h	2	[63:62]	count

7. System Power Consumption

■ Supply Voltage

Parameter	Rating
Operating Voltage	12.0V ± 5%

■ Power Consumption

(Unit: W)		Read	Write	Idle
3D TLC (BiCS5)	400 GB	6.2	5.5	2.4
	800 GB	8.8	7.5	2.4
	1600 GB	8.6	10.5	2.4
	3200 GB	8.5	11.1	2.5
	6400 GB	9.0	11.5	2.5

8. Physical Dimension

2.5" U.2 SSD (Unit: mm)

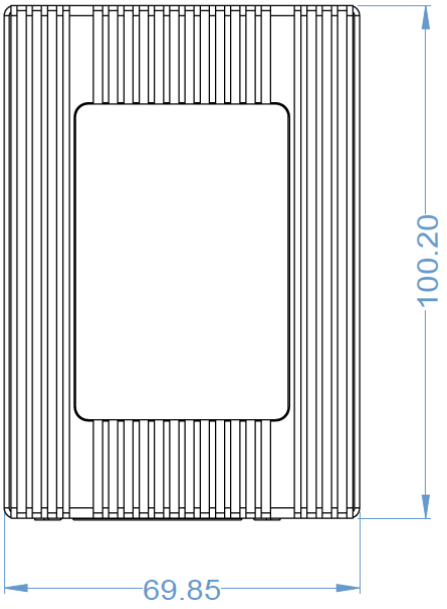

(Top View)

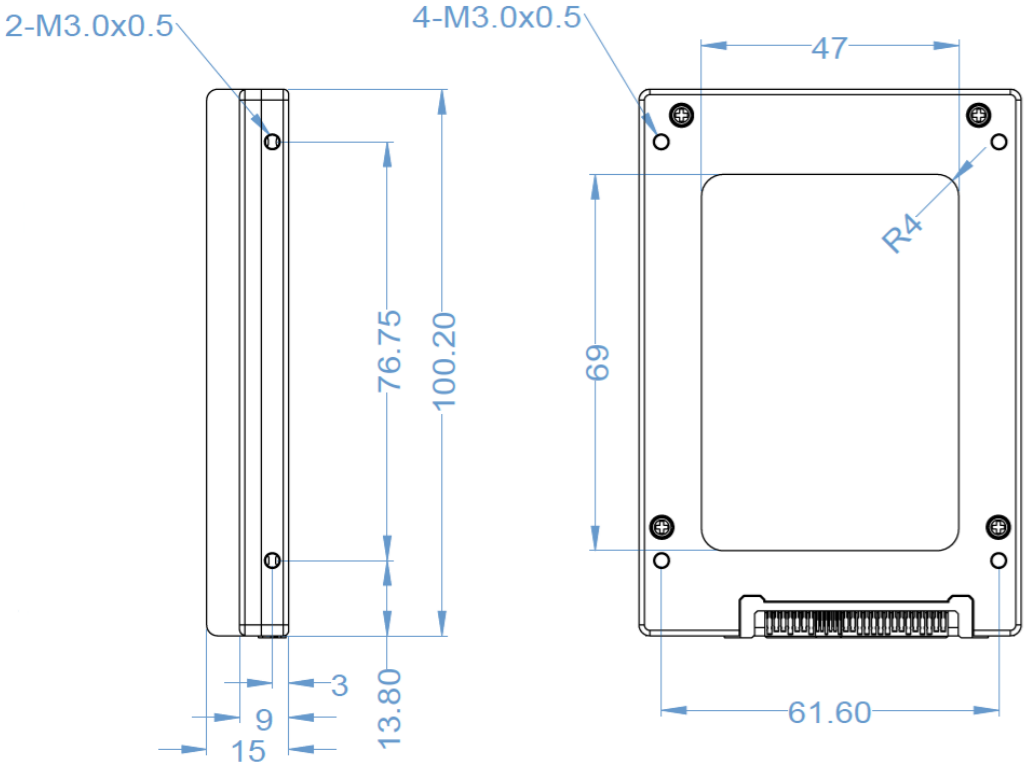

(Side View) **(Bottom View)**

Appendix: Part Number Table

Product	Advantech PN
SQF ER-1 NVMe U.2 SSD (OPAL) DWPD 1.2, 400G 3D TLC (BiCS5) (0~70°C)	SQF-CU2V4-400GDG1C
SQF ER-1 NVMe U.2 SSD (OPAL) DWPD 1.2, 800G 3D TLC (BiCS5) (0~70°C)	SQF-CU2V8-800GDG1C
SQF ER-1 NVMe U.2 SSD (OPAL) DWPD 1.2, 1600G 3D TLC (BiCS5) (0~70°C)	SQF-CU2V8-1K6GDG1C
SQF ER-1 NVMe U.2 SSD (OPAL) DWPD 1.2, 3200G 3D TLC (BiCS5) (0~70°C)	SQF-CU2V8-3K2GDG1C
SQF ER-1 NVMe U.2 SSD (OPAL) DWPD 1.2, 6400G 3D TLC (BiCS5) (0~70°C)	SQF-CU2V8-6K4GDG1C
SQF ER-1 NVMe U.2 SSD (OPAL) DWPD 1.2, 400G 3D TLC (BiCS5) (-40~85°C)	SQF-CU2V4-400GDG1E
SQF ER-1 NVMe U.2 SSD (OPAL) DWPD 1.2, 800G 3D TLC (BiCS5) (-40~85°C)	SQF-CU2V8-800GDG1E
SQF ER-1 NVMe U.2 SSD (OPAL) DWPD 1.2, 1600G 3D TLC (BiCS5) (-40~85°C)	SQF-CU2V8-1K6GDG1E
SQF ER-1 NVMe U.2 SSD (OPAL) DWPD 1.2, 3200G 3D TLC (BiCS5) (-40~85°C)	SQF-CU2V8-3K2GDG1E
SQF ER-1 NVMe U.2 SSD (OPAL) DWPD 1.2, 6400G 3D TLC (BiCS5) (-40~85°C)	SQF-CU2V8-6K4GDG1E