Half-Size mSATA SSD 650-D Datasheet

(SQF-SHMxx-xxxxDSDx)

CONTENTS

Safety Instructions 4
Consignes de sécurité 4
1. Overview 5
2. Features 6
3. Specification Table 7
4. General Description 9
5. Pin Assignment and Description 13
5.1 Half-Size mSATA Interface Pin Assignments 13
6. Identify Device Data 15
7. ATA Command Set 18
8. System Power Consumption 25
8.1 Supply Voltage 25
8.2 Power Consumption (Estimated) 25
9. Physical Dimension 26
Appendix: Part Number Table 27

Revision History

Rev.	Date	History
1.0	2022/8/10	1. Preliminary
1.1	2022/9/14	1. Update Sanitize command description and ATA Command Set

Advantech reserves the right to make changes without further notice to any products or data herein to improve reliability, function, or design. Information furnished by Advantech is believed to be accurate and reliable. However, Advantech does not assure any liability arising out of the application or use of this information, nor the application or use of any product or circuit described herein, neither does it convey any license under its patent rights nor the rights of others.
Copyright © 1983-2022 Advantech Co., Ltd. All rights reserved.

Safety Instructions

1. Read these safety instructions carefully.
2. Keep this User Manual for later reference.
3. Disconnect this equipment from any AC outlet before cleaning. Use a damp cloth. Do not use liquid or spray detergents for cleaning.
4. For plug-in equipment, the power outlet socket must be located near the equipment and must be easily accessible.
5. Keep this equipment away from humidity.
6. Put this equipment on a reliable surface during installation. Dropping it or letting it fall may cause damage.
7. The openings on the enclosure are for air convection. Protect the equipment from overheating. DO NOT COVER THE OPENINGS.
8. Make sure the voltage of the power source is correct before connecting the equipment to the power outlet.
9. Position the power cord so that people cannot step on it. Do not place anything over the power cord.
10. All cautions and warnings on the equipment should be noted.
11. If the equipment is not used for a long time, disconnect it from the power source to avoid damage by transient overvoltage.
12. Never pour any liquid into an opening. This may cause fire or electrical shock.
13. Never open the equipment. For safety reasons, the equipment should be opened only by qualified service personnel.
14. If one of the following situations arises, get the equipment checked by service personnel:
    - The power cord or plug is damaged.
    - Liquid has penetrated the equipment.
    - The equipment has been exposed to moisture.
    - The equipment does not work well, or you cannot get it to work according to the user's manual.
    - The equipment has been dropped and damaged.
    - The equipment has obvious signs of breakage.
15. DO NOT LEAVE THIS EQUIPMENT IN AN ENVIRONMENT WHERE THE STORAGE TEMPERATURE MAY GO BELOW -20° C (-4° F) OR ABOVE 60° C (140° F). THIS COULD DAMAGE THE EQUIPMENT. THE EQUIPMENT SHOULD BE IN A CONTROLLED ENVIRONMENT.
16. CAUTION: DANGER OF EXPLOSION IF BATTERY IS INCORRECTLY REPLACED. REPLACE ONLY WITH THE SAME OR EQUIVALENT TYPE RECOMMENDED BY THE MANUFACTURER, DISCARD USED BATTERIES ACCORDING TO THE MANUFACTURER'S INSTRUCTIONS.

Consignes de sécurité

1. Lisez attentivement ces instructions de sécurité.
2. Conservez ce manuel pour référence ultérieure.
3. Débranchez cet appareil de toute prise secteur avant le nettoyage. Utilisez un chiffon humide. Ne pas utiliser de détergents liquides ou en aérosol pour le nettoyage
4. Pour les équipements enfichables, la prise de courant doit être située près de l'équipement et doit être facilement accessible.
5. Gardez cet équipement à l'abri de l'humidité.
6. Placez cet équipement sur une surface fiable lors de l'installation. Le laisser tomber ou le laisser tomber peut causer des dommages.
7. Les ouvertures sur l'enceinte sont destinées à la convection de l'air. Protégez l'équipement de la surchauffe. NE COUVREZ PAS LES OUVERTURES.
8. Assurez-vous que la tension de la source d'alimentation est correcte avant de connecter l'équipement à la prise de courant.
9. Positionnez le cordon d'alimentation de sorte que personne ne puisse marcher dessus. Ne placez rien sur le cordon d'alimentation.
10. Toutes les mises en garde et avertissements sur l'équipement doivent être notés..
11. Si l'appareil n'est pas utilisé pendant une longue période, débranchez-le de la source d'alimentation pour éviter tout dommage dû à une surtension transitoire.
12. Ne jamais verser de liquide dans une ouverture. Cela pourrait provoquer un incendie ou un choc électrique.
13. N'ouvrez jamais l'équipement. Pour des raisons de sécurité, l'équipement ne doit être ouvert que par du personnel qualifié.
14. Si l'une des situations suivantes se produit, faites vérifier l'équipement par le personnel de service:l:
    - Le cordon d'alimentation ou la fiche est endommagé Liquid has penetrated the equipment.
    - L'équipement a été exposé à l'humidité.
    - L'équipement ne fonctionne pas bien ou vous ne pouvez pas le faire fonctionner conformément au manuel d'utilisation..
    - L'équipement est tombé et endommagé..
    - L'équipement présente des signes évidents de rupture.
15. NE PAS LAISSER CET APPAREIL DANS UN ENVIRONNEMENT O LA TEMPÉRATURE DE STOCKAGE PEUT ÊTRE INFÉRIEURE À -20 ° C (-4 ° F) OU SUPÉRIEURE À 60 ° C (140 ° F). CELA POURRAIT ENDOMMAGER L'ÉQUIPEMENT. L'ÉQUIPEMENT DOIT ÊTRE DANS UN ENVIRONNEMENT CONTRÔLÉ.
16. ATTENTION: DANGER D'EXPLOSION EN CAS DE REMPLACEMENT INCORRECT DE LA PILE. REMPLACEZ UNIQUEMENT AVEC LE MÊME TYPE OU LE TYPE ÉQUIVALENT RECOMMANDÉ PAR LE FABRICANT, DÉJETTEZ LES PILES UTILISÉES SELON LES INSTRUCTIONS DU FABRICANT.

1. Overview

Advantech SQF 650-D series Half-Size Half-Size mSATA (SQF-SHM 650-D) delivers all the advantages of flash disk technology with the Serial ATA I/II/III interface and is fully compliant with MO-300 Half-Size mSATA specification. The SQF-SHM 650-D is designed to operate at a maximum operating frequency of 177MHz with 25MHz external crystal. Its capacity could provide a wide range up to 1TB and sTLC(Pseudo SLC) capacity up to 256GB. Moreover, it can reach up to 550MB/s read as well as 520MB/s write high performance based on 3D TLC flash (with 1.75MB SRAM enabled and measured by CrystalDiskMark v5.0). The power consumption of SQF-SHM 650-D is much lower than traditional hard drives, making it the best embedded solution for new platforms.

2. Features

- **Standard SATA interface**
  - Support SATA 1.5/3.0/6.0 Gbps interface
  - SATA Revision 3.2 compliant
- **Operating Voltage：3.3V**
- **TRIM、AHCI supported**
- **Hardware write protect supported**
  - Pin header type: default on short position for write protect, and write protect function enabled by firmware.
- **Temperature Ranges**
  - Commercial Temperature
    - Tc 0℃ to 70℃ for operating[1]
    - Tc -40℃ to 85℃ for storage
  - Minus Temperature
    - Tc -20℃ to 85℃ for operating[1]
    - Tc -40℃ to 85℃ for storage
  - Industrial Temperature
    - -40℃ to 85℃ for operating[1]
    - -40℃ to 85℃ for storage

  *Note 1: Based on SMART Attribute C2h measured by thermal sensor.
- **Mechanical Specification**
  - Shock：1,500G / 0.5ms
  - Vibration：20G / 80~2,000Hz
- **Humidty**
  - Humidity：Up to 95% under 40℃
- **Acquired RoHS、WHQL、CE、FCC Certificate**
- **Acoustic：0 dB**
- **Dimension：26.88 mm x 29.85 mm x 4.0 mm**

3. Specification Table

■ Performance (Estimated)

		Sequential Performance (MB/sec)		Random Performance (IOPS@4K)	
		Read	Write	Read	Write
3D TLC (BiCS5)	64 GB	375	264	35,000	55,000
	128 GB	557	471	45,000	79,000
	256 GB	560	502	77,000	84,000
	512 GB	559	516	89,000	86,000
	1 TB	559	518	89,000	86,000
3D sTLC	32 GB	558	471	47,000	75,000
	64 GB	560	503	73,000	80,000
	128 GB	560	524	91,000	81,000
	256 GB	558	525	93,000	82,000

* Tested by CrystalDiskMark 1GB workload.

Endurance

JEDEC defined an endurance rating TBW (TeraByte Written), following by the equation below, for indicating the number of terabytes a SSD can be written which is a measurement of SSDs' expected lifespan, represents the amount of data written to the device.

TBW = [(NAND Endurance) x (SSD Capacity)] / WAF

- **NAND Endurance**: Program / Erase cycle of a NAND flash.
  - 3D TLC (BiCS5): 3,000 cycles
  - 3D sTLC (BiCS5): 30,000 cycles
- **SSD Capacity**: SSD physical capacity in total of a SSD.
- **WAF**: Write Amplification Factor (WAF), as the equation shown below, is a numerical value representing the ratio between the amount of data that a SSD controller needs to write and the amount of data that the host's flash controller writes. A better WAF, which is near to 1, guarantees better endurance and lower frequency of data written to flash memory.

WAF = (Lifetime write to flash) / (Lifetime write to host)

Endurance measurement is based on New JEDEC 219 Client Workload and verified with following workload conditions,

- Test duration: over 168hrs (=7 days)
- File Size: Follow by JEDEC 219

3D TLC (BiCS5)	WAF	TBW	DWPD*
64 GB	2.90	65	0.93
128 GB	4.20	90	0.64
256 GB	3.20	230	0.82
512 GB	2.70	550	0.98
1 TB	2.50	1200	1.07

3D sTLC	WAF	TBW	DWPD*
32 GB	2	800	22.8
64 GB	1.4	2200	31.4
128 GB	1.3	4750	33.9
256 GB	1.3	9600	34.2

* The endura nce of SSD could be estimated based on users' behaviors, NAND enduran ce cycles, and write amplification factor. It is not guaranteed by the flash vendor. TBW may vary from flash configuration and platform.

* Endurance of 1 drive writes per day (DWPD) for 3 years

4. General Description

Error Correction Code (ECC)

Flash memory cells will deteriorate with use, which might generate random bit errors in the stored data. Thus, SQF 650-D series Half-Size mSATA applies the LDPC (Low Density Parity Check) of ECC algorithm, which can detect and correct errors occur during read process, ensure data been read correctly, as well as protect data from corruption.

Wear Leveling

NAND flash devices can only undergo a limited number of program/erase cycles, and in most cases, the flash media are not used evenly. If some areas get updated more frequently than others, the lifetime of the device would be reduced significantly. Thus, Wear Leveling is applied to extend the lifespan of NAND Flash by evenly distributing write and erase cycles across the media.

SQF provides advanced Wear Leveling algorithm, which can efficiently spread out the flash usage through the whole flash media area. Moreover, by implementing both dynamic and static Wear Leveling algorithms, the life expectancy of the NAND flash is greatly improved.

Bad Block Management

Bad blocks are blocks that include one or more invalid bits, and their reliability is not guaranteed. Blocks that are identified and marked as bad by the manufacturer are referred to as “Initial Bad Blocks”. Bad blocks that are developed during the lifespan of the flash are named “Later Bad Blocks”. SQF implements an efficient bad block management algorithm to detect the factory-produced bad blocks and manages any bad blocks that appear with use. This practice further prevents data being stored into bad blocks and improves the data reliability.

Power Loss Protection: Flush Manager

Power Loss Protection is a mechanism to prevent data loss during unexpected power failure. DRAM is a volatile memory and frequently used as temporary cache or buffer between the controller and the NAND flash to improve the SSD performance. However, one major concern of the DRAM is that it is not able to keep data during power failure. Accordingly, SQF SSD applies the Flush Manager technology, only when the data is fully committed to the NAND flash will the controller send acknowledgement (ACK) to the host. Such implementation can prevent false-positive performance and the risk of power cycling issues.

In addition, it is critical for a controller to shorten the time the in-flight data stays in the controller internal cache. Thus, SQF applies an algorithm to reduce the amount of data resides in the cache to provide a better performance. With Flush Manager, incoming data would only have a “pit stop” in the cache and then move to NAND flash directly. Also, the onboard DDR will be treated as an “organizer” to consolidate incoming data into groups before written into the flash to improve write amplification.

TRIM

TRIM is a feature which helps improve the read/write performance and speed of solid-state drives (SSD). Unlike hard disk drives (HDD), SSDs are not able to overwrite existing data, so the available space gradually becomes smaller with each use. With the TRIM command, the operating system can inform the SSD which blocks of data are no longer in use and can be removed permanently. Thus, the SSD will perform the erase action, which prevents unused data from occupying blocks all the time.

SMART

SMART, an acronym for Self-Monitoring, Analysis and Reporting Technology, is an open standard that allows a hard disk drive to automatically detect its health and report potential failures. When a failure is recorded by SMART, users can choose to replace the drive to prevent unexpected outage or data loss. Moreover, SMART can inform users of impending failures while there is still time to perform proactive actions, such as copy data to another device.

■ Over-Provision

Over Provisioning refers to the inclusion of extra NAND capacity in a SSD, which is not visible and cannot be used by users. With Over Provisioning, the performance and IOPS (Input/Output Operations per Second) are improved by providing the controller additional space to manage P/E cycles, which enhances the reliability and endurance as well. Moreover, the write amplification of the SSD becomes lower when the controller writes data to the flash.

■ Thermal Throttling

Thermal Throttling function is for protecting the drive and reducing the possibility of read / write error due to overheat. The temperature is monitored by the thermal sensor. As the operating temperature continues to increase to threshold temperature, the Thermal Throttling mechanism is activated. At this time, the performance of the drive will be significantly decreased to avoid continuous heating. When the operating temperature falls below threshold temperature, the drive can resume to normal operation.

■ Advanced Device Security Features

- **Advanced Encryption Standard (AES)**

  An AES 256-bit encryption key is generated in the drive's security controller before the data gets stored on the NAND flash. When the controller or firmware fails, the data that is securely stored in the encryption key becomes inaccessible through the NAND flash.

- **TCG OPAL 2.0 support**

  SQFlash 650-D series supports standard TCG OPAL 2.0 function for advance Self-Encryption Drive (SED) feature sets. Advantech provides also user friendly interface for setting disk / system bonding to prevent SSD be used in non-authorized platforms, which is called Flash Lock function.

- **Write Protect Function**

  SQFlash 650-D series default support Write Protect function, when the write protect function enabled, all of the write command will carried to a buffer area without real programming to the Flash IC. Therefore, the data won't be saved in this mode and will be totally discarded upon power shutting down.

- **Secure Erase Function (SATA Command)**

  SQFlash 650-D series supports standard SATA command for secure erase function; when the SSD controller receive the secure erase command, the erase process will reset all blocks and erase all of the user data in the SSD.

- **Sanitize Function (SATA Command)**

  SQFlash 650-D series implements Sanitize command sets by default and supports Block Erase, Crypto Scramble, Overwrite and other related commands. With internal AES encryption support, Crypto Scramble starts with resetting AES key. In this way, the existing data will be scrambled within 10ms and can no longer be recovered. Also, the erase flag is set when the erase function is triggered, which will ensure the entire erase process can be 100% completed. Even if there's power outage, the erase operation will resume as soon as power is restored.

  (Note) Crypto Scramble needs to be done with the TCG OPAL 2.0 setting enabled.

- **Crypto Erase**

  SQFlash Crypto Erase is a security function based on vendor command which can be triggered by sending ATA Command. When Crypto Erase is activated, it will trim logical to physical table, fill data in it, and then reset the AES key. With this Crypto Erase function, we can ensure original data in SSD inaccessible through the NAND flash.

- **Military Secure Erase**

SQFlash Military Secure Erase is a series of security function based on vendor command which can be triggered by sending ATA Command. Please check Military Secure Erase Whitepaper for detail of each functions: AFSSI 5020, DoD 5220.22-M, USA NAVY NAVSO P-5239-26, NSA Manual 130-2, USA-ARMY 380-19, NISPOMUP Chap 8, Sect.8-501, NSA/CSS 9-12, AFSSI 8580.

■ Block Diagram

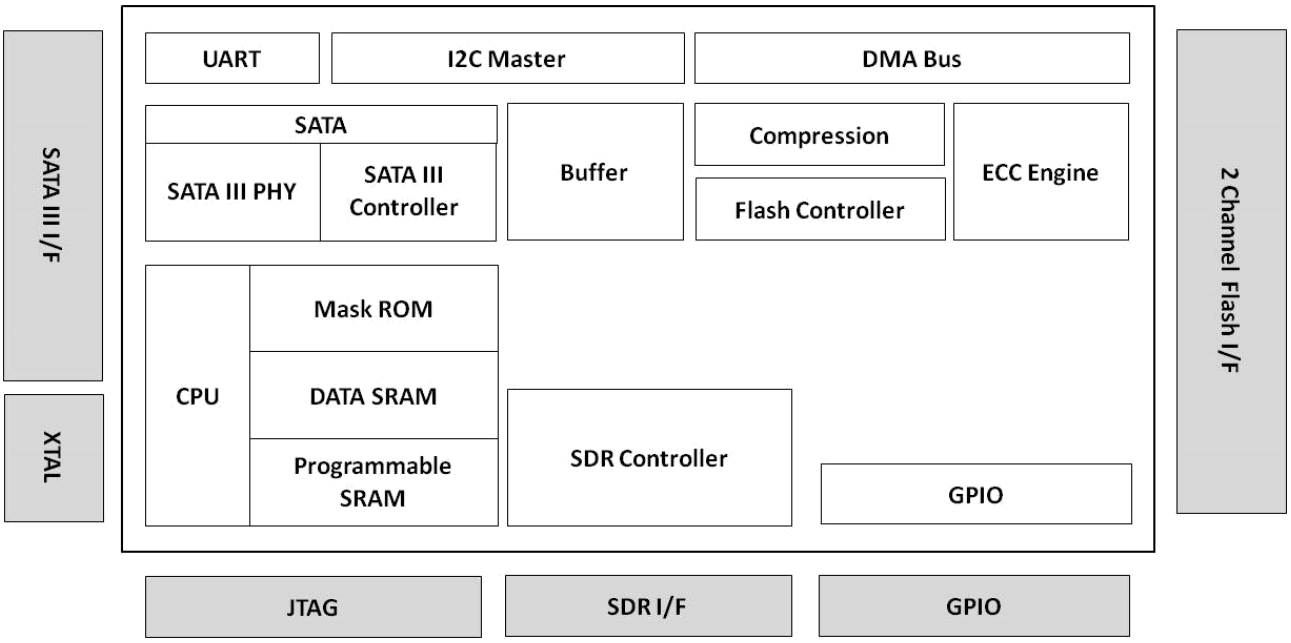

■ LBA value

Density	LBA
32 GB	62,533,296
64 GB	125,045,424
128 GB	250,069,680
256 GB	500,118,192
512 GB	1,000,215,216
1 TB	2,000,409,264

5. Pin Assignment and Description

5.1 Half-Size mSATA Interface Pin Assignments

Pin #	Function	Description
1	GPIO_WP	Write Protection GPIO (optional)
2	+3.3V	3.3V Source
3	NC	No Connect
4	DGND	Digital GND
5	NC	No Connect
6	NC	No Connect
7	NC	No Connect
8	NC	No Connect
9	DGND	Digital GND
10	NC	No Connect
11	NC	No Connect
12	NC	No Connect
13	NC	No Connect
14	NC	No Connect
15	DGND	Digital GND
16	NC	No Connect
17	GPIO_QE	Quick Erase GPIO (optional)
18	DGND	Digital GND
19	NC	No Connect
20	NC	No Connect
21	SATA GND	SATA Ground Return Pin
22	NC	No Connect
23	B+	Host Receiver Differential Signal Pair
24	+3.3V	3.3V Source
25	B-	Host Receiver Differential Signal Pair
26	SATA GND	SATA Ground Return Pin
27	SATA GND	SATA Ground Return Pin
28	NC	No Connect
29	SATA GND	SATA Ground Return Pin
30	NC	No Connect
31	A-	Host Transmitter Differential Signal Pair
32	NC	No Connect
33	A+	Host Transmitter Differential Signal Pair
34	DGND	Digital GND
35	SATA GND	SATA Ground Return Pin
36	NC	No Connect
37	SATA GND	SATA Ground Return Pin
38	NC	No Connect
39	+3.3V	3.3V Source
40	DGND	Digital GND
41	+3.3V	3.3V Source
42	NC	No Connect
43	NC	No Connect
44	DEVSLP	Enter/Exit DevSleep
45	NC	Reserved pin
46	NC	No Connect

47	NC	Reserved pin
48	NC	No Connect
49	DA/DSS	Device Activity Signal
50	DGND	Digital GND
51	GND	Default connect to GND
52	+3.3V	3.3V Source

6. Identify Device Data

The Identity Device Data enables Host to receive parameter information from the device. The parameter words in the buffer have the arrangement and meanings defined in below table. All reserve bits or words are zero

Word	ATA Identify Parameter	Value
0	General configuration bit-significant information	0040h
1	Obsolete	*1
2	Specific configuration	C837h
3	Obsolete	0010h
4-5	Retired	00000000h
6	Obsolete	003Fh
7-8	Reserved for assignment by the Compact Flash Association	00000000h
9	Retired	0000h
10-19	Serial number (20 ASCII characters)	Varies
20-21	Retired	00000000h
22	Obsolete	0000h
23-26	Firmware revision (8 ASCII characters)	Varies
27-46	Model number (xxxxxxxx)	Varies
47	7:0- Maximum number of sectors transferred per interrupt on MULTIPLE commands	8010h
48	Trusted Computing feature set options(not support)	4000h
49	Capabilities	2F00h
50	Capabilities	4000h
51-52	Obsolete	000000000h
53	Words 88 and 70:64 valid	0007h
54	Obsolete	*1
55	Obsolete	0010h
56	Obsolete	003Fh
57-58	Obsolete	*2
59	Sanitize and Number of sectors transferred per interrupt on MULTIPLE commands	5D10h
60-61	Maximum number of sector (28bit LBA mode)	*3
62	Obsolete	0000h
63	Multi-word DMA modes supported/selected	0407h
64	PIO modes supported	0003h
65	Minimum Multiword DMA transfer cycle time per word	0078h
66	Manufacturer's recommended Multiword DMA transfer cycle time	0078h
67	Minimum PIO transfer cycle time without flow control	0078h
68	Minimum PIO transfer cycle time with IORDY flow control	0078h
69	Additional Supported (support download microcode DMA)	0D00h
70	Reserved	0000h
71-74	Reserved for the IDENTIFY PACKET DEVICE command	0000000000000000h
75	Queue depth	001Fh
76	Serial SATA capabilities	E70Eh
77	Serial ATA Additional Capabilities	0086h
78	Serial ATA features supported	014Ch

79	Serial ATA features enabled	0040h
80	Major Version Number	0FF8h
81	Minor Version Number	0000h
82	Command set supported	706Bh
83	Command set supported	7409h
84	Command set/feature supported extension	6163h
85	Command set/feature enabled	7069h
86	Command set/feature enabled	B401h
87	Command set/feature default	6163h
88	Ultra DMA Modes	007Fh
89	Time required for security erase unit completion	0001h
90	Time required for Enhanced security erase completion	001Eh
91	Current advanced power management value	0000h
92	Master Password Revision Code	FFFEh
93	Hardware reset result. For SATA devices, word 93 shall be set to the value 0000h.	0000h
94	Obsolete	0000h
95	Stream Minimum Request Size	0000h
96	Streaming Transfer Time – DMA	0000h
97	Streaming Access Latency – DMA and PIO	0000h
98-99	Streaming Performance Granularity	0000h
100-103	Maximum user LBA for 48 bit Address feature set	*4
104	Streaming Transfer Time – PIO	0000h
105	Maximum number of 512-byte blocks per DATA SET MANAGEMENT command	0008h
106	Physical sector size/Logical sector size	4000h
107	Inter-seek delay for ISO-7779 acoustic testing in microseconds	0000h
108-111	World Wide Name	Varies
112-115	Reserved	0000000000000000h
116	Reserved	0000h
117-118	Words per logical Sector	00000000h
119	Supported settings	411Ch
120	Command set/Feature Enabled/Supported	401Ch
121-126	Reserved	0h
127	Obsolete	0h
128	Security status	0021h
129-140	Vendor specific	Varies
141	Vendor specific	Varies
142-159	Vendor specific	Varies
160	Reserved for CFA	0h
161-167	Reserved for CFA	0h
168	Device Nominal Form Factor	Varies
169	DATA SET MANAGEMENT command is supported	0001h
170-173	Additional Product Identifier	0h
174-175	Reserved	0h
176-205	Current media serial number	0h
206	SCT Command Transport	0h

207-208	Reserved	0h
209	Alignment of logical blocks within a physical block	4000h
210-211	Write-Read-Verify Sector Count Mode 3 (not support)	0000h
212-213	Write-Read-Verify Sector Count Mode 2 (not support)	0000h
214-216	Obsolete	0000h
217	Non-rotating media device	0001h
218	Reserved	0h
219	NV Cache relate (not support)	0h
220	Write read verify feature set current mode	0h
221	Reserved	0h
222	Transport major version number	10FFh
223	Transport minor version number	0000h
224-229	Reserved	0h
230-233	Extend number of user addressable sectors	0h
234	Minimum number of 512-byte data blocks per DOWNLOAD MICROCODE command for mode 03h	0001h
235	Maximum number of 512-byte data blocks per DOWNLOAD MICROCODE command for mode 03h	FFFEh
236-254	Reserved	0h
255	Integrity word (Checksum and Signature)	XXA5h

Capacity (GB)	*1 (Word 1/Word 54)	*2 (Word 57 – 58)	*3 (Word 60 – 61)	*4 (Word 100 – 103)
32	3FFFh	FBFC10h	3BA2EB0h	3BA2EB0h
64	3FFFh	FBFC10h	7740AB0h	7740AB0h
128	3FFFh	FBFC10h	EE7C2B0h	EE7C2B0h
256	3FFFh	FBFC10h	FFFFFFFh	1DCF32B0h
512	3FFFh	FBFC10h	FFFFFFFh	3B9E12B0h
1024	3FFFh	FBFC10h	FFFFFFFh	773BD2B0h

7. ATA Command Set

[Command Set List]

Op-Code	Command Description
00h	NOP
06h	Data Set Management
10h	Recalibrate
20h	Read Sectors
21h	Read Sectors without Retry
24h	Read Sectors EXT
25h	Read DMA EXT
27h	Read Native Max Address EXT
29h	Read Multiple EXT
2Fh	Read Log EXT
30h	Write Sectors
31h	Write Sectors without Retry
34h	Write Sectors EXT
35h	Write DMA EXT
37h	Set Native Max Address EXT
39h	Write Multiple EXT
3Dh	Write DMA FUA EXT
3Fh	Write Long EXT
40h	Read Verify Sectors
41h	Read Verify Sectors without Retry
42h	Read Verify Sectors EXT
45h	Write Uncorrectable EXT
47h	Read Log DMA EXT
57h	Write Log DMA EXT
5Bh	TRUSTED NON-DATA
5Ch	TRUSTED RECEIVE
5Dh	TRUSTED RECEIVE DMA
5Eh	TRUSTED SEND
5Fh	TRUSTED SEND DMA
60h	Read FPDMA Queued
61h	Write FPDMA Queued
70h	Seek
77h	SET DATE & TIME EXT
90h	Execute Device Diagnostic
91h	Initialize Device Parameters
92h	Download Microcode PIO
93h	Download Microcode DMA
B0h	D0h SMART: READ DATA
B0h	D2h SMART: ENABLE/DISABLE AUTOSAVE
B0h	D4h SMART: EXECUTE OFF-LINE IMMEDIATE
B0h	D5h SMART: READ LOG
B0h	D6h SMART: WRITE LOG
B0h	D8h SMART: ENABLE OPERATIONS
B0h	D9h SMART: DISABLE OPERATIONS
B0h	DAh SMART: RETURN STATUS
B1h	C0h DEVICE CONFIGURATION: RESTORE
B1h	C2h DEVICE CONFIGURATION: IDENTIFY
B1h	C3h DEVICE CONFIGURATION: SET
B1h	C4h DEVICE CONFIGURATION: IDENTIFY DMA
B1h	C5h DEVICE CONFIGURATION: SET DMA
B4h	00h SANITIZE DEVICE: SANITIZE STATUS EXT
B4h	11h SANITIZE DEVICE: CRYPTO SCRAMBLE EXT
B4h	12h SANITIZE DEVICE: BLOCK ERASE EXT
B4h	14h SANITIZE DEVICE: OVERWRITE EXT
B4h	20h SANITIZE DEVICE: SANITIZE FREEZE LOCK EXT

B4h	40h	SANITIZE DEVICE: SANITIZE ANTIFREEZE LOCK EXT
C4h		Read Multiple
C5h		Write Multiple
C6h		Set Multiple Mode
C8h		Read DMA
C9h		Read DMA without Retry
CAh		Write DMA
CBh		Write DMA without Retry
CEh		Write Multiple FUA EXT
E0h		Standby Immediate
E1h		Idle Immediate
E2h		Standby
E3h		Idle
E4h		Read Buffer
E5h		Check Power Mode
E6h		Sleep
E7h		Flush Cache
E8h		Write Buffer
E9h		Read Buffer DMA
EAh		Flush Cache EXT
EBh		Write Buffer DMA
ECh		IDENTIFY DEVICE
EFh	02h	SET FEATURES: Enable volatile write cache
EFh	03h	SET FEATURES: Set transfer mode
EFh	05h	SET FEATURES: Enable the APM feature set
EFh	55h	SET FEATURES: Disable read look-ahead feature
EFh	82h	SET FEATURES: Disable volatile write cache

EFh	85h		SET FEATURES: Disable the APM feature set
EFh	86h		SET FEATURES: Disable the PUIS feature set
EFh	90h	02h	SET FEATURES: Disable DMA Setup FIS Auto-Activate optimization
EFh	90h	03h	SET FEATURES: Disable Device-initiated interface power state transitions
EFh	90h	06h	SET FEATURES: Disable Software Settings Preservation
EFh	90h	07h	SET FEATURES: Disable Device Automatic Partial to Slumber transitions
EFh	10h	03h	SET FEATURES: Enable Device-initiated interface power state transitions
EFh	10h	06h	SET FEATURES: Enable Software Settings Preservation
EFh	10h	07h	SET FEATURES: Enable Device Automatic Partial to Slumber transitions
EFh	AAh		SET FEATURES: Enable read look-ahead feature
EFh	CCh		SET FEATURES: Enable reverting to power-on defaults
F1h			Security Set Password
F2h			Security Unlock
F3h			Security Erase Prepare
F4h			Security Erase Unit
F5h			Security Freeze Lock
F6h			Security Disable Password
F8h			Read Native Max Address
F9h			Set Max: Address
F9h	01h		SET MAX: SET PASSWORD
F9h	02h		SET MAX: LOCK
F9h	03h		SET MAX: UNLOCK
F9h	04h		SET MAX: FREEZE LOCK

Note: ND = Non-Data Command
PI = PIO Data-In Command
PO = PIO Data-Out Command
DM = DMA Command
DD = Execute Diagnostic Command

[Command Set Descriptions]

1. CHECK POWER MODE (code: E5h);
This command allow host to determine the current power mode of the device.

2. DOWNLOAD MICROCODE (code: 92h);
This command enables the host to alter the device's microcode. The data transferred using the DOWNLOAD MICROCODE command is vendor specific.
All transfers shall be an integer multiple of the sector size. The size of the data transfer is determined by the content of the LBA Low register and the Sector Count register.
This allows transfer sizes from 0 bytes to 33,553,920 bytes, in 512bytes increments.

3. EXECUTE DEVICE DIAGNOSTIC (code: 90h);
This command performs the internal diagnostic tests implemented by the module.

4. FLUSH CACHE (code: E7h);
This command used by the host to request the device to flush the write cache.

5. FLUSH CACHE EXT (code: EAh);
This command is used by the host to request the device to flush the write cache. If there is data in the write cache, that data shall be written to the media.

6. IDENTIFY DEVICE (code: ECh);
The IDENTIFY DEVICE command enables the host to receive parameter information from the module.

7. IDLE (code: 97h or E3h);
This command allows the host to place the module in the IDLE mode and also set the Standby timer. INTRQ may be asserted even through the module may not have fully transitioned to IDLE mode. If the Sector Count register is non-"0", then the Standby timer shall be enabled. The value in the Sector Count register shall be used to determine the time programmed into the Standby timer. If the Sector Count register is "0" then the Standby timer is disabled.

8. IDLE IMMEDIATE (code: E1h);
This command causes the module to set BSY, enter the Idle (Read) mode, clear BSY and generate an interrupt.

9. INITIALIZE DEVICE PARAMETERS (code: 91h);
This command enables the host to set the number of sectors per track and the number of heads per cylinder.

10. NOP (code: 00h);
If this command is issued, the module respond with command aborted.

11. READ BUFFER (code: E4h);
This command enables the host to read the current contents of the module's sector buffer.

12. READ DMA (code: C8h or C9h);
This command reads from "1" to "256" sectors as specified in the Sector Count register using the DMA data transfer protocol. A sector count of "0" requests "256" sectors transfer. The transfer begins at the sector specified in the Sector Number register.

13. READ DMA Ext (code: 25h);
This command allows the host to read data using the DMA data transfer protocol.

14. READ MULTIPLE (code: C4h);

This command performs similarly to the READ SECTORS command. Interrupts are not generated on each sector, but on the transfer of a block which contains the number of sector per block is defined by the content of word 59 in the IDENTIFY DEVICE response.

15. READ MULTIPLE EXT (code: 29h);

This command performs similarly to the READ SECTORS command. The number of sectors per block is defined by a successful SET MULTIPLE command. If no successful SET MULTIPLE command has been issued, the block is defined by the device's default value for number of sectors per block as defined in bits (7:0) in word 47 in the IDENTIFY DEVICE information.

16. READ NATIVE MAX ADDRESS (code: F8h);

This command returns the native maximum address. The native maximum address is the highest address accepted by the device in the factory default condition.

17. READ NATIVE MAX ADDRESS EXT (code: 27h);

This command returns the native maximum address.

18. READ SECTOR(S) (code: 20h or 21h);

This command reads from "1" to "256" sectors as specified in the Sector Count register. A sector count of "0" requests "256" sectors transfer. The transfer begins at the sector specified in the Sector Number register.

19. READ SECTOR(S) EXT (code: 24h);

This command reads from "1" to "65536" sectors as specified in the Sector Count register. A sector count of "0" requests "65536" sectors transfer. The transfer begins at the sector specified in the Sector Number register.

20. READ VERIFY SECTOR(S) (code: 40h or 41h);

This command is identical to the READ SECTORS command, except that DRQ is never set and no data is transferred to the host.

21. READ VERIFY SECTOR(S) EXT (code: 42h);

This command is identical to the READ SECTORS command, except that DRQ is never set and no data is transferred to the host.

22. RECALIBRATE (code: 1Xh);

This command return value is select address mode by the host request.

23. SECURITY DISABLE PASSWORD (code: F6h);

This command transfers 512 bytes of data from the host. Table defines the content of this information. If the password selected by word 0 match the password previously saved by the device, the device shall disable the Lock mode. This command shall not change the Master password. The Master password shall be reactivated when a User password is set.

24. SECURITY ERASE PREPARE (code: F3h);

This command shall be issued immediately before the SECURITY ERASE UNIT command to enable device erasing and unlocking.

25. SECURITY ERASE UNIT (code: F4h);

This command transfer 512 bytes of data from the host. Table## defines the content of this information. If the password does not match the password previously saved by the device, the device shall reject the command with command aborted.

The SECURITY ERASE PREPARE command shall be completed immediately prior to the SECURITY ERASE UNIT command.

26. SECURITY FREEZE LOCK (code: F5h);

This command shall set the device to frozen mode. After command completion any other commands that update the device Lock mode shall be command aborted. Frozen shall be disabled by power-off or hardware reset.

If SECURITY FREEZE LOCK is issued when the drive is in frozen mode, the drive executes the command and remains in frozen mode.

27. SECURITY SET PASSWORD (code: F1h);

This command transfer 512 bytes of data from the host. Table defines the content of this information. The data transferred controls the function of this command. Table defines the interaction of the identifier and security level bits.

28. SECURITY UNLOCK (code: F2h);

This command transfer 512 bytes of data from the host. Table (as Disable Password) defines the content of this information.

If the Identifier bit is set to Master and the device is in high security level, then the password supplied shall be compared with the stored Master password. If the device is in maximum security level then the unlock shall be rejected.

If the identifier bit is set to user then the device shall compare the supplied password with the stored User password.

If the password compare fails then the device shall return command aborted to the host and decrements the unlock counter. This counter shall be initially set to five and shall be decremented for each password mismatch when SECURITY UNLOCK is issued and the device is locked. When this counter reachs zero then SECURITY UNLOCK and SECURITY ERASE UNIT command shall be aborted unitl a power-on or a hardware reset.

29. SEEK (code: 7Xh);

This command performs address range check.

30. SET MAX ADDRESS (code: F9h);

After successful command completion, all read and write access attempts to address greater than specified by the successful SET MAX ADDRESS command shall be rejected with an IDNF error. IDENTIFY DEVICE response words (61:60) shall reflect the maximum address set with this command.

31. SET MAX ADDRESS EXT (code: 37h);

After successful command completion, all read and write access attempts to address greater than specified by the successful SET MAX ADDRESS command shall be rejected with an IDNF error. IDENTIFY DEVICE response words (61:60) shall reflect the maximum address set with this command.

32. SET FEATURE (code: EFh);

This command is used by the host to establish parameters that affect the execution of certain device features.

33. SET MULTIPLE MODE (code: C6h);

This command enables the device to perform READ and Write Multiple operations and establishes the block count for these commands.

34. SLEEP (code: 99h or E6h);

This command causes the module to set BSY, enter the Sleep mode, clear BSY and generate an interrupt.

35. SMART READ DATA (code: B0h with Feature register value of D0h);

This command returns the Device SMART data structure to the host.

36. SMART ENABLE/DISABLE AUTO SAVE (code: B0h with Feature register value of D2h);
This command enables and disables the optional attribute autosave feature of the device.

37. SMART EXECUTE OFF_LINE (code: B0h with Feature register value of D4h);
This command causes the device to immediately initiate the optional set of activities that collect SMART data in an off-line mode and then save this data to the device's non-volatile memory, or execute a self-diagnostic test routine in either captive or off-line mode.

38. SMART READ LOG (code: B0h with Feature register value of D5h);
This command returns the specified log data to the host.

39. SMART ENABLE OPERATION (code: B0h with Feature register value of D8h);
This command enables access to all SMART capabilities within the device. Prior to receipt of this command SMART data are neither monitored nor saved by the device.

40. SMART DISABLE OPERATION (code: B0h with Feature register value of D9h);
This command disables all SMART capabilities within the device including any and all timer and event count functions related exclusively to this feature. After command acceptance the device shall disable all SMART operations.
After receipt of this command by the device, all other SMART commands including SMART DISABLE OPERATION commands, with exception of SMART ENABLE OPERATIONS, are disabled and invalid and shall be command aborted by the device.

41. SMART RETURN STATUS (code: B0h with Feature register value of DAh);
This command causes the device to communicate the reliability status of the device to the host.

42. STANDBY (code: E2h);
This command causes the module to set BSY, enter the Standby mode, clear BSY and return the interrupt immediately.

43. STANDBY IMMEDIATE (code: E0h);
This command causes the module to set BSY, enter the Standby mode, clear BSY and return the interrupt immediately.

44. WRITE BUFFER (code: E8h);
This command enables the host to overwrite contents of the module's sector buffer with any data pattern desired.

45. WRITR DMA (code: CAh or CBh);
This command writes from "1" to "256" sectors as specified in the Sector Count register using the DMA data transfer protocol. A sector count of "0" requests "256" sectors transfer. The transfer begins at the sector specified in the Sector Number register.

46. WRITR DMA EXT (code: 35h);
This command writes from "1" to "65536" sectors as specified in the Sector Count register using the DMA data transfer protocol. A sector count of "0" requests "65536" sectors transfer. The transfer begins at the sector specified in the Sector Number register.

47. WRITE MULTIPLE (code: C5h);
This command is similar to the WRITE SECTORS command. Interrupts are not presented on each sector, but on the transfer of a block which contains the number of sectors defined by Set Multiple command.

48. WRITE MULTIPLE EXT (code: 39h);
This command is similar to the WRITE SECTORS command. Interrupts are not presented on each sector, but on the transfer of a block which contains the number of sectors defined by Set Multiple command.

49. WRITE SECTOR(S) (code: 30h);

This command writes from “1” to “256” sectors as specified in the Sector Count register. A sector count of “0” requests “256” sectors transfer. The transfer begins at the sector specified in the Sector Number register.

50. WRITE SECTOR(S) EXT (code: 34h);

This command writes from “1” to “65536” sectors as specified in the Sector Count register. A sector count of “0” requests “65536” sectors transfer. The transfer begins at the sector specified in the Sector Number register.

51. WRITE SECTOR(S) W/O ERASE (code: 38h);

This command writes from “1” to “256” sectors as specified in the Sector Count register. A sector count of “0” requests “256” sectors transfer. The transfer begins at the sector specified in the Sector Number register.

52. WRITE VERIFY (code: 3Ch);

This command is similar to the WRITE SECTOR(S) command, except that each sector is verified before the command is completed.

8. System Power Consumption

8.1 Supply Voltage

Parameter	Rating
Operating Voltage	3.3V

8.2 Power Consumption (Estimated)

(mW)		Read	Write	Idle	Slumber
3D TLC (BiCS5)	64 GB	970	900	200	30
	128 GB	1100	1200	250	30
	256 GB	1100	1100	250	30
	512 GB	1150	1300	250	30
	1 TB	1200	1300	250	30
3D sTLC	32 GB	1150	1150	250	20
	64 GB	1200	1200	250	20
	128 GB	1200	1250	250	20
	256 GB	1350	1250	250	20

9. Physical Dimension

Half Size Half-Size mSATA (Unit: mm)

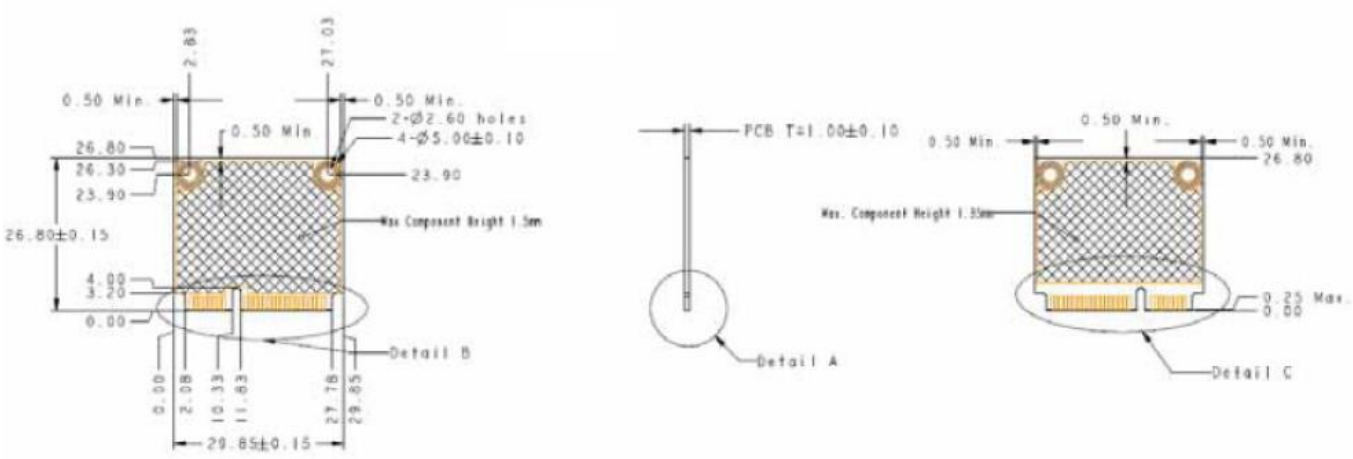

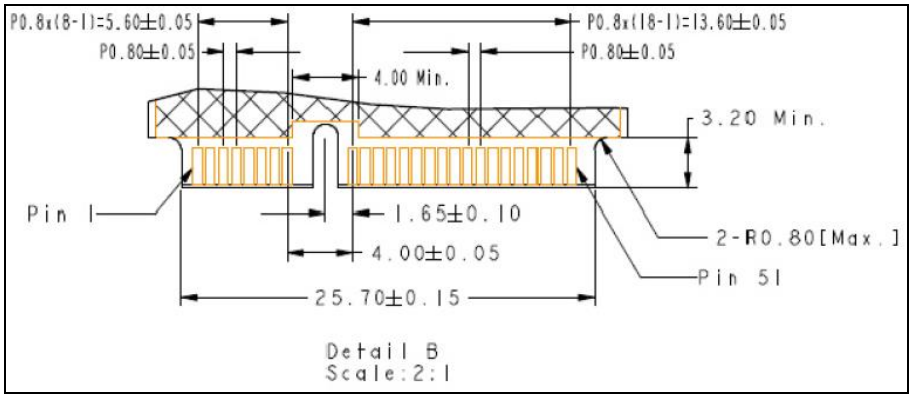

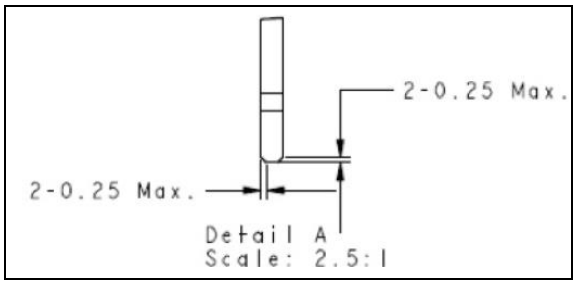

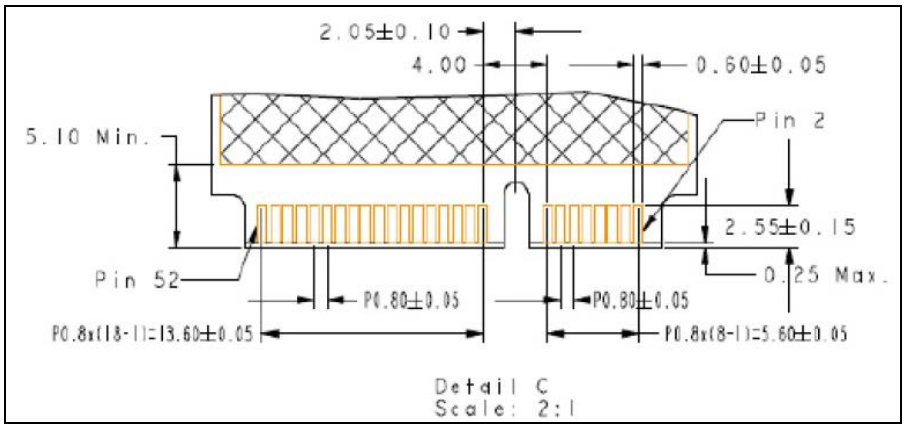

Appendix: Part Number Table

Product	Advantech PN
SQF Half-Size mSATA 650-D 64G 3D TLC (BiCS5) (0~70°C)	SQF-SHMV1-64GDSDC
SQF Half-Size mSATA 650-D 128G 3D TLC (BiCS5) (0~70°C)	SQF-SHMV1-128GDSDC
SQF Half-Size mSATA 650-D 256G 3D TLC (BiCS5) (0~70°C)	SQF-SHMV1-256GDSDC
SQF Half-Size mSATA 650-D 512G 3D TLC (BiCS5) (0~70°C)	SQF-SHMV2-512GDSDC
SQF Half-Size mSATA 650-D 1T 3D TLC (BiCS5) (0~70°C)	SQF-SHMV2-1TDSDC
SQF Half-Size mSATA 650-D 64G 3D TLC (BiCS5) (-20~85°C)	SQF-SHMV1-64GDSDM
SQF Half-Size mSATA 650-D 128G 3D TLC (BiCS5) (-20~85°C)	SQF-SHMV1-128GDSDM
SQF Half-Size mSATA 650-D 256G 3D TLC (BiCS5) (-20~85°C)	SQF-SHMV1-256GDSDM
SQF Half-Size mSATA 650-D 512G 3D TLC (BiCS5) (-20~85°C)	SQF-SHMV2-512GDSDM
SQF Half-Size mSATA 650-D 1T 3D TLC (BiCS5) (-20~85°C)	SQF-SHMV2-1TDSDM
SQF Half-Size mSATA 650-D 64G 3D TLC (BiCS5) (-40~85°C)	SQF-SHMV1-64GDSDE
SQF Half-Size mSATA 650-D 128G 3D TLC (BiCS5) (-40~85°C)	SQF-SHMV1-128GDSDE
SQF Half-Size mSATA 650-D 256G 3D TLC (BiCS5) (-40~85°C)	SQF-SHMV1-256GDSDE
SQF Half-Size mSATA 650-D 512G 3D TLC (BiCS5) (-40~85°C)	SQF-SHMV2-512GDSDE
SQF Half-Size mSATA 650-D 1T 3D TLC (BiCS5) (-40~85°C)	SQF-SHMV2-1TDSDE
SQF Half-Size mSATA 650-D 32G 3D sTLC (BiCS5) (0~70°C)	SQF-SHMZ1-32GDSDC
SQF Half-Size mSATA 650-D 64G 3D sTLC (BiCS5) (0~70°C)	SQF-SHMZ1-64GDSDC
SQF Half-Size mSATA 650-D 128G 3D sTLC (BiCS5) (0~70°C)	SQF-SHMZ2-128GDSDC
SQF Half-Size mSATA 650-D 256G 3D sTLC (BiCS5) (0~70°C)	SQF-SHMZ2-256GDSDC
SQF Half-Size mSATA 650-D 32G 3D sTLC (BiCS5) (-40~85°C)	SQF-SHMZ1-32GDSDE
SQF Half-Size mSATA 650-D 64G 3D sTLC (BiCS5) (-40~85°C)	SQF-SHMZ1-64GDSDE
SQF Half-Size mSATA 650-D 128G 3D sTLC (BiCS5) (-40~85°C)	SQF-SHMZ2-128GDSDE
SQF Half-Size mSATA 650-D 256G 3D sTLC (BiCS5) (-40~85°C)	SQF-SHMZ2-256GDSDE