UTC-515

15.6" Ubiquitous Touch Computer
UTC-515D with Intel® Bay Trail J1900
UTC-515E with Intel® Haswell i5-4300U



Features

- Low Power & Fanless design
- Built-in Intel® Bay Trail J1900 (UTC-515D)
- Built-in Intel® Haswell i5-4300U (UTC-515E)
- Providing Natural Viewing Experience with 16:9 15.6" Display
- Front panel complies with IP65 protection standard
- All in one aluminum extrusion design
- Landscape & Portrait screen mode support by different applications
- VESA 100 mm standard mounting holes for varied mounting demands
- Attachable design for panel & peripherals to extend function and applications

Introduction

UTC-515 features an all-in-one computing system equipped with wide format, touch based LCD panel. It is easy to integrate key peripherals and display systems for diversified self-service and interactive signage deploy in different application areas. The systems deliver updated information with well-designed interactive interfaces, fully ensure relevant content and targeted promotions are delivered. UTC series touch panel computers are the best investments to enhance user satisfaction, further brand equity, and maximize business profits.

Specifications

Processor System	CPU	Intel® Celeron J1900 (UTC-515D)	Intel® Core™ i5-4300U (UTC-515E) Intel® Core™ i3-4010U (Available)* Intel® Celeron 2980U (Available)*
	Base Frequency	2 GHz (Quad-Core)	1.9 GHz (Dual-Core)
	Cache	L2 Cache 2MB	L3 Cache 3MB
	Memory	1 x SO-DIMM DDR3L 1333 MHz up to 8 GB	1 x SO-DIMM DDR3L 1333 / 1600 MHz up to 8 GB
	HDD	1 x 2.5 internal SATA HDD bay	
	Network (LAN)	2 x Gigabit Ethernet ports (Supports Wake on LAN)	
	I/O ports	2 x RS-232 COM (RS-422/485)* 3 x USB 2.0 / 1 x USB 3.0 2 x Gigabit Ethernet (RJ-45) 1 x VGA & HDMI Audio Line-out x 1, Mic-in x 1	2 x RS-232 COM (RS-422/485)* 2 x USB 2.0 / 2 x USB 3.0 2 x Gigabit Ethernet (RJ-45) 1 x VGA & HDMI Audio Line-out x 1, Mic-in x 1
	Stereo Speaker	1 W x 2	
	Bus expansion	Full-size MiniPCIe/mSATA	
	Mounting	VESA 100 x 100 mm	
	Dimensions (W x H x D)	389.81 x 240.12 x 45.20 (mm)	
	Weight	4.85 kg (10.67 lb)	
OS Support		Embedded Windows 7/Embedded Windows 8/ Window 10 IoT Enterprise/Linux Ubuntu 14.04/ Android 4.4.2	Embedded Windows 7 /Embedded Windows 8/ Window 10 IoT Enterprise
Environmental Specifications	Operating Temperature	0 ~ 40° C (32 ~ 104° F)	
	Relative Humidity	10 ~ 95% @ 40° C non-condensing	
	Vibration	0.5G	
	Shock	5G peak acceleration (11 msec. duration)	
	Certification	CE, FCC, CB, UL, CCC, BSMI	
	Front Panel Protection	IP65/ NEMA4 Compliant	
Power Supply	Input Rating	12 V/5 A (60 W ITE Adapter)	12 V/5 A (60 W ITE Adapter)
	Power consumption	Typical 35W Max. 40W	Typical 40W Max. 50W
LCD Display	Size/Type	15.6" TFT LCD with LED backlight	
	Max.Resolution	1366 x 768 (FHD 1920 x 1080 Optional)	
	Max. Color	16.7M	
	Pixel Pitch (um)	252 x 252	
	Brightness (cd/m²)	400	
	View Angle	170°/160°	
Touch Screen Option (PE/RE/GE)	Type	Projected Capacitive. Analog Resistive 5-wires / Glass Panel	
	Light Transmission	90% ± 2% / 80% ± 5% / 90%	
	Controller	USB Interface / USB Interface / -	

All product specifications are subject to change without notice, * identify as optional function

Last updated : 21-Oct-2016

Dimensions

Unit: mm (inch)

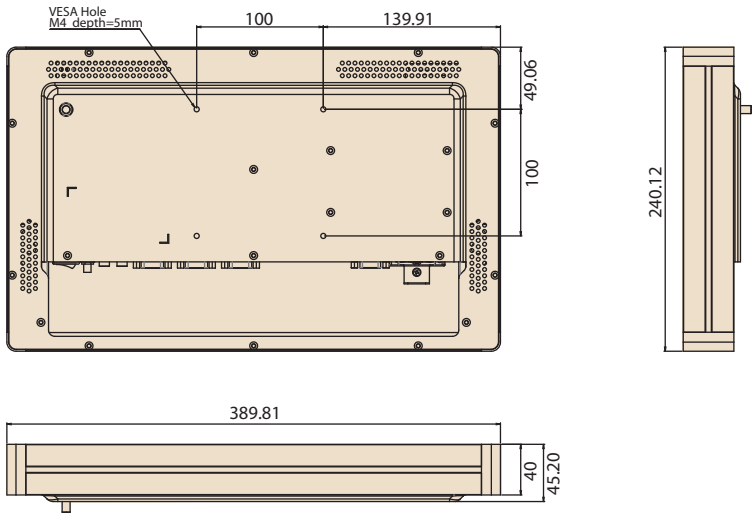

Ordering Information

Part No.	Description
UTC-515D-RE	15.6" Intel® Celeron® J1900 Based fanless UTC with Resi.T/S. 4 GB RAM
UTC-515D-PE	15.6" Intel® Celeron® J1900 Based fanless UTC with PCT.T/S. 4 GB RAM
UTC-515D-GE	15.6" Intel® Celeron® J1900 Based fanless UTC with Glass. 4 GB RAM
UTC-515E-RE	15.6" Intel® Core™ i5-4300U Based fanless UTC with Resi.T/S. 4 GB RAM
UTC-515E-PE	15.6" Intel® Core™ i5-4300U Based fanless UTC with PCT.T/S. 4 GB RAM
UTC-515E-GE	15.6" Intel® Core™ i5-4300U Based fanless UTC with Glass. 4 GB RAM
1702002605	Power cord 2P FRANCE 10A/16A 220V 1.83M 90D
1702002600	Power Cord 3P UL/CSA(USA) 125V 10A 1.83M 180D
1700000596	Power Cord (China) CCC,10A 250V, 3P 1830mm
1700018704	Power Cord UK BSI 2P 10A 250V 180cm 18AWG
1960060674N001	IO Cover for UTC-515 series

Side groove design for Flexible peripheral device



Fully- Integrated I/O

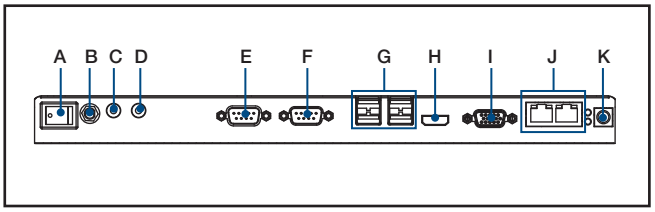

A. Power switch
B. Antenna Port
C. Line-out
D. Mic-in
E. COM2
F. COM1
G. USB 3.0 x 2, USB 2.0 x 2 (USB 3.0 x1 for UTC-515D)
H. HDMI
I. VGA
J. LAN Ports x 2
K. DC Input

Peripherals for UTC-500 series

Part No.	Description
UTC-P01-A1E	5M Camera Module For UTC-5XX (USB connection)
UTC-P02-A0E	Magnet Strip Reader For UTC-5XX (USB connection)
UTC-P03-A0E	RFID Reader For UTC-5XX (USB connection)
UTC-P06-A0E	Smart Card Reader For UTC-5XX (USB connection)
UTC-P07-A1E	1D/2D Barcode Reader For UTC-5XX (USB Connection)
UTC-P21-A0E	4 in 1 Modules Barcode reader + RFID + Card reader + MSR

Installation Accessory

Part No.	Description
UTK-500F-A0E	Floor stand with SNBC BTP-U81 thermal printer (for China only)
UTK-500S-A0E	Floor stand without thermal printer
UTK-500G-A0E	Floor stand with thermal printer bracket
UTC-520-STAND1E	Desktop stand for UTC-515/520
UTC-H01-STANDE	H-shaped floor stand
UTC-T01-STANDE	Triangle shape floor stand
UTC-WALL-MOUNT1E	Wall Mount kit for UTC-515/520
UTC-WALL-MOUNT3E	Wall Mount kit for UTC-515/520