aimtec
Your Power Partner

Series AM1D-Z

1 Watt | DC-DC Converter



FEATURES:

- RoHS compliant
- High efficiency up to 86%
- Low profile plastic package
- 7 pin SIP package
- Operating temperature -40ºC to + 85ºC
- Short circuit protection
- Pin compatible with multiple manufacturers
- Input / Output Isolation 1000, 3000, 4000, 5200 & 6000 VDC

RoHS

Models
Single output

Model	Input Voltage (V)	Output Voltage (V)	Output Current Max (mA)	Isolation (VDC)	Input Current Full Load | No Load (mA)		Max Capacitive Load(uF)	Efficiency %
AM1D-0303SZ	2.97-3.63	3.3	303	1000	399	28	220	76
AM1D-0305SZ	2.97-3.63	5	200	1000	389	22	220	78
AM1D-0307SZ	2.97-3.63	7.2	139	1000	379	22	220	78
AM1D-0309SZ	2.97-3.63	9	111	1000	379	35	220	80
AM1D-0312SZ	2.97-3.63	12	83	1000	389	30	220	77
AM1D-0315SZ	2.97-3.63	15	67	1000	389	30	220	78
AM1D-0318SZ	2.97-3.63	18	56	1000	415	30	220	73
AM1D-0324SZ	2.97-3.63	24	42	1000	415	30	220	73
AM1D-0503SZ	4.5-5.5	3.3	303	1000	256	15	220	78
AM1D-0505SZ	4.5-5.5	5	200	1000	247	17	220	81
AM1D-0507SZ	4.5-5.5	7.2	139	1000	247	16	220	81
AM1D-0509SZ	4.5-5.5	9	111	1000	244	15	220	82
AM1D-0512SZ	4.5-5.5	12	83	1000	253	17	220	79
AM1D-0515SZ	4.5-5.5	15	67	1000	233	17	220	86
AM1D-0518SZ	4.5-5.5	18	56	1000	241	16	220	83
AM1D-0524SZ	4.5-5.5	24	42	1000	244	20	220	82
AM1D-1203SZ	10.8-13.2	3.3	303	1000	111	12	220	75
AM1D-1205SZ	10.8-13.2	5	200	1000	105	14	220	79
AM1D-1207SZ	10.8-13.2	7.2	139	1000	111	14	220	75
AM1D-1209SZ	10.8-13.2	9	111	1000	104	9	220	80
AM1D-1212SZ	10.8-13.2	12	83	1000	105	13	220	79
AM1D-1215SZ	10.8-13.2	15	67	1000	102	10	220	82
AM1D-1218SZ	10.8-13.2	18	56	1000	103	11	220	81
AM1D-1224SZ	10.8-13.2	24	42	1000	110	20	220	76
AM1D-1503SZ	13.5-16.5	3.3	303	1000	83	10	220	80
AM1D-1505SZ	13.5-16.5	5	200	1000	82	7	220	81
AM1D-1507SZ	13.5-16.5	7.2	139	1000	85	10	220	78
AM1D-1509SZ	13.5-16.5	9	111	1000	85	10	220	78
AM1D-1512SZ	13.5-16.5	12	83	1000	83	8	220	80
AM1D-1515SZ	13.5-16.5	15	67	1000	84	12	220	79
AM1D-1518SZ	13.5-16.5	18	56	1000	83	10	220	80
AM1D-1524SZ	13.5-16.5	24	42	1000	80	5	220	83
AM1D-2403SZ	21.6-26.4	3.3	303	1000	56	8	220	74
AM1D-2405SZ	21.6-26.4	5	200	1000	54	6	220	77
AM1D-2407SZ	21.6-26.4	7.2	139	1000	57	6	220	73
AM1D-2409SZ	21.6-26.4	9	111	1000	55	6	220	76
AM1D-2412SZ	21.6-26.4	12	83	1000	53	6	220	78
AM1D-2415SZ	21.6-26.4	15	67	1000	52	5	220	80
AM1D-2418SZ	21.6-26.4	18	56	1000	51	5	220	82
AM1D-2424SZ	21.6-26.4	24	42	1000	52	8	220	80
AM1D-0303SH30Z	2.97-3.63	3.3	303	3000	399	28	220	76
AM1D-0305SH30Z	2.97-3.63	5	200	3000	389	22	220	78
AM1D-0307SH30Z	2.97-3.63	7.2	139	3000	379	22	220	78
AM1D-0309SH30Z	2.97-3.63	9	111	3000	379	35	220	80
AM1D-0312SH30Z	2.97-3.63	12	83	3000	389	30	220	77
AM1D-0315SH30Z	2.97-3.63	15	67	3000	389	30	220	78
AM1D-0318SH30Z	2.97-3.63	18	56	3000	415	30	220	73
AM1D-0324SH30Z	2.97-3.63	24	42	3000	415	30	220	73

AM1D-0503SH30Z	4.5-5.5	3.3	303	3000	256	15	220	78
AM1D-0505SH30Z	4.5-5.5	5	200	3000	247	17	220	81
AM1D-0507SH30Z	4.5-5.5	7.2	139	3000	247	16	220	81
AM1D-0509SH30Z	4.5-5.5	9	111	3000	244	15	220	82
AM1D-0512SH30Z	4.5-5.5	12	83	3000	253	17	220	79
AM1D-0515SH30Z	4.5-5.5	15	67	3000	233	17	220	86
AM1D-0518SH30Z	4.5-5.5	18	56	3000	241	16	220	83
AM1D-0524SH30Z	4.5-5.5	24	42	3000	244	20	220	82
AM1D-1203SH30Z	10.8-13.2	3.3	303	3000	111	12	220	75
AM1D-1205SH30Z	10.8-13.2	5	200	3000	105	14	220	79
AM1D-1207SH30Z	10.8-13.2	7.2	139	3000	111	14	220	75
AM1D-1209SH30Z	10.8-13.2	9	111	3000	104	9	220	80
AM1D-1212SH30Z	10.8-13.2	12	83	3000	105	13	220	79
AM1D-1215SH30Z	10.8-13.2	15	67	3000	102	10	220	82
AM1D-1218SH30Z	10.8-13.2	18	56	3000	103	11	220	81
AM1D-1224SH30Z	10.8-13.2	24	42	3000	110	20	220	76
AM1D-1503SH30Z	13.5-16.5	3.3	303	3000	83	10	220	80
AM1D-1505SH30Z	13.5-16.5	5	200	3000	82	7	220	81
AM1D-1507SH30Z	13.5-16.5	7.2	139	3000	85	10	220	78
AM1D-1509SH30Z	13.5-16.5	9	111	3000	85	10	220	78
AM1D-1512SH30Z	13.5-16.5	12	83	3000	83	8	220	80
AM1D-1515SH30Z	13.5-16.5	15	67	3000	84	12	220	79
AM1D-1518SH30Z	13.5-16.5	18	56	3000	83	10	220	80
AM1D-1524SH30Z	13.5-16.5	24	42	3000	80	5	220	83
AM1D-2403SH30Z	21.6-26.4	3.3	303	3000	56	8	220	74
AM1D-2405SH30Z	21.6-26.4	5	200	3000	54	6	220	77
AM1D-2407SH30Z	21.6-26.4	7.2	139	3000	57	6	220	73
AM1D-2409SH30Z	21.6-26.4	9	111	3000	55	6	220	76
AM1D-2412SH30Z	21.6-26.4	12	83	3000	53	6	220	78
AM1D-2415SH30Z	21.6-26.4	15	67	3000	52	5	220	80
AM1D-2418SH30Z	21.6-26.4	18	56	3000	51	5	220	82
AM1D-2424SH30Z	21.6-26.4	24	42	3000	52	8	220	80
AM1D-0303SH40Z	2.97-3.63	3.3	303	4000	399	28	220	76
AM1D-0305SH40Z	2.97-3.63	5	200	4000	389	22	220	78
AM1D-0307SH40Z	2.97-3.63	7.2	139	4000	379	22	220	78
AM1D-0309SH40Z	2.97-3.63	9	111	4000	379	35	220	80
AM1D-0312SH40Z	2.97-3.63	12	83	4000	389	30	220	77
AM1D-0315SH40Z	2.97-3.63	15	67	4000	389	30	220	78
AM1D-0318SH40Z	2.97-3.63	18	56	4000	415	30	220	73
AM1D-0324SH40Z	2.97-3.63	24	42	4000	415	30	220	73
AM1D-0503SH40Z	4.5-5.5	3.3	303	4000	256	15	220	78
AM1D-0505SH40Z	4.5-5.5	5	200	4000	247	17	220	81
AM1D-0507SH40Z	4.5-5.5	7.2	139	4000	247	16	220	81
AM1D-0509SH40Z	4.5-5.5	9	111	4000	244	15	220	82
AM1D-0512SH40Z	4.5-5.5	12	83	4000	253	17	220	79
AM1D-0515SH40Z	4.5-5.5	15	67	4000	233	17	220	86
AM1D-0518SH40Z	4.5-5.5	18	56	4000	241	16	220	83
AM1D-0524SH40Z	4.5-5.5	24	42	4000	244	20	220	82
AM1D-1203SH40Z	10.8-13.2	3.3	303	4000	111	12	220	75
AM1D-1205SH40Z	10.8-13.2	5	200	4000	105	14	220	79
AM1D-1207SH40Z	10.8-13.2	7.2	139	4000	111	14	220	75
AM1D-1209SH40Z	10.8-13.2	9	111	4000	104	9	220	80
AM1D-1212SH40Z	10.8-13.2	12	83	4000	105	13	220	79
AM1D-1215SH40Z	10.8-13.2	15	67	4000	102	10	220	82
AM1D-1218SH40Z	10.8-13.2	18	56	4000	103	11	220	81
AM1D-1224SH40Z	10.8-13.2	24	42	4000	110	20	220	76
AM1D-1503SH40Z	13.5-16.5	3.3	303	4000	83	10	220	80
AM1D-1505SH40Z	13.5-16.5	5	200	4000	82	7	220	81
AM1D-1507SH40Z	13.5-16.5	7.2	139	4000	85	10	220	78
AM1D-1509SH40Z	13.5-16.5	9	111	4000	85	10	220	78

AM1D-1512SH40Z	13.5-16.5	12	83	4000	83	8	220	80
AM1D-1515SH40Z	13.5-16.5	15	67	4000	84	12	220	79
AM1D-1518SH40Z	13.5-16.5	18	56	4000	83	10	220	80
AM1D-1524SH40Z	13.5-16.5	24	42	4000	80	5	220	83
AM1D-2403SH40Z	21.6-26.4	3.3	303	4000	56	8	220	74
AM1D-2405SH40Z	21.6-26.4	5	200	4000	54	6	220	77
AM1D-2407SH40Z	21.6-26.4	7.2	139	4000	57	6	220	73
AM1D-2409SH40Z	21.6-26.4	9	111	4000	55	6	220	76
AM1D-2412SH40Z	21.6-26.4	12	83	4000	53	6	220	78
AM1D-2415SH40Z	21.6-26.4	15	67	4000	52	5	220	80
AM1D-2418SH40Z	21.6-26.4	18	56	4000	51	5	220	82
AM1D-2424SH40Z	21.6-26.4	24	42	4000	52	8	220	80
AM1D-0303SH52Z	2.97-3.63	3.3	303	5200	399	28	220	76
AM1D-0305SH52Z	2.97-3.63	5	200	5200	389	22	220	78
AM1D-0307SH52Z	2.97-3.63	7.2	139	5200	379	22	220	78
AM1D-0309SH52Z	2.97-3.63	9	111	5200	379	35	220	80
AM1D-0312SH52Z	2.97-3.63	12	83	5200	389	30	220	77
AM1D-0315SH52Z	2.97-3.63	15	67	5200	389	30	220	78
AM1D-0318SH52Z	2.97-3.63	18	56	5200	415	30	220	73
AM1D-0324SH52Z	2.97-3.63	24	42	5200	415	30	220	73
AM1D-0503SH52Z	4.5-5.5	3.3	303	5200	256	15	220	78
AM1D-0505SH52Z	4.5-5.5	5	200	5200	247	17	220	81
AM1D-0507SH52Z	4.5-5.5	7.2	139	5200	247	16	220	81
AM1D-0509SH52Z	4.5-5.5	9	111	5200	244	15	220	82
AM1D-0512SH52Z	4.5-5.5	12	83	5200	253	17	220	79
AM1D-0515SH52Z	4.5-5.5	15	67	5200	233	17	220	86
AM1D-0518SH52Z	4.5-5.5	18	56	5200	241	16	220	83
AM1D-0524SH52Z	4.5-5.5	24	42	5200	244	20	220	82
AM1D-1203SH52Z	10.8-13.2	3.3	303	5200	111	12	220	75
AM1D-1205SH52Z	10.8-13.2	5	200	5200	105	14	220	79
AM1D-1207SH52Z	10.8-13.2	7.2	139	5200	111	14	220	75
AM1D-1209SH52Z	10.8-13.2	9	111	5200	104	9	220	80
AM1D-1212SH52Z	10.8-13.2	12	83	5200	105	13	220	79
AM1D-1215SH52Z	10.8-13.2	15	67	5200	102	10	220	82
AM1D-1218SH52Z	10.8-13.2	18	56	5200	103	11	220	81
AM1D-1224SH52Z	10.8-13.2	24	42	5200	110	20	220	76
AM1D-1503SH52Z	13.5-16.5	3.3	303	5200	83	10	220	80
AM1D-1505SH52Z	13.5-16.5	5	200	5200	82	7	220	81
AM1D-1507SH52Z	13.5-16.5	7.2	139	5200	85	10	220	78
AM1D-1509SH52Z	13.5-16.5	9	111	5200	85	10	220	78
AM1D-1512SH52Z	13.5-16.5	12	83	5200	83	8	220	80
AM1D-1515SH52Z	13.5-16.5	15	67	5200	84	12	220	79
AM1D-1518SH52Z	13.5-16.5	18	56	5200	83	10	220	80
AM1D-1524SH52Z	13.5-16.5	24	42	5200	80	5	220	83
AM1D-2403SH52Z	21.6-26.4	3.3	303	5200	56	8	220	74
AM1D-2405SH52Z	21.6-26.4	5	200	5200	54	6	220	77
AM1D-2407SH52Z	21.6-26.4	7.2	139	5200	57	6	220	73
AM1D-2409SH52Z	21.6-26.4	9	111	5200	55	6	220	76
AM1D-2412SH52Z	21.6-26.4	12	83	5200	53	6	220	78
AM1D-2415SH52Z	21.6-26.4	15	67	5200	52	5	220	80
AM1D-2418SH52Z	21.6-26.4	18	56	5200	51	5	220	82
AM1D-2424SH52Z	21.6-26.4	24	42	5200	52	8	220	80
AM1D-0303SH60Z	2.97-3.63	3.3	303	6000	399	28	220	76
AM1D-0305SH60Z	2.97-3.63	5	200	6000	389	22	220	78
AM1D-0307SH60Z	2.97-3.63	7.2	139	6000	379	22	220	78
AM1D-0309SH60Z	2.97-3.63	9	111	6000	379	35	220	80
AM1D-0312SH60Z	2.97-3.63	12	83	6000	389	30	220	77
AM1D-0315SH60Z	2.97-3.63	15	67	6000	389	30	220	78
AM1D-0318SH60Z	2.97-3.63	18	56	6000	415	30	220	73

AM1D-0324SH60Z	2.97-3.63	24	42	6000	415	30	220	73
AM1D-0503SH60Z	4.5-5.5	3.3	303	6000	256	15	220	78
AM1D-0505SH60Z	4.5-5.5	5	200	6000	247	17	220	81
AM1D-0507SH60Z	4.5-5.5	7.2	139	6000	247	16	220	81
AM1D-0509SH60Z	4.5-5.5	9	111	6000	244	15	220	82
AM1D-0512SH60Z	4.5-5.5	12	83	6000	253	17	220	79
AM1D-0515SH60Z	4.5-5.5	15	67	6000	233	17	220	86
AM1D-0518SH60Z	4.5-5.5	18	56	6000	241	16	220	83
AM1D-0524SH60Z	4.5-5.5	24	42	6000	244	20	220	82
AM1D-1203SH60Z	10.8-13.2	3.3	303	6000	111	12	220	75
AM1D-1205SH60Z	10.8-13.2	5	200	6000	105	14	220	79
AM1D-1207SH60Z	10.8-13.2	7.2	139	6000	111	14	220	75
AM1D-1209SH60Z	10.8-13.2	9	111	6000	104	9	220	80
AM1D-1212SH60Z	10.8-13.2	12	83	6000	105	13	220	79
AM1D-1215SH60Z	10.8-13.2	15	67	6000	102	10	220	82
AM1D-1218SH60Z	10.8-13.2	18	56	6000	103	11	220	81
AM1D-1224SH60Z	10.8-13.2	24	42	6000	110	20	220	76
AM1D-1503SH60Z	13.5-16.5	3.3	303	6000	83	10	220	80
AM1D-1505SH60Z	13.5-16.5	5	200	6000	82	7	220	81
AM1D-1507SH60Z	13.5-16.5	7.2	139	6000	85	10	220	78
AM1D-1509SH60Z	13.5-16.5	9	111	6000	85	10	220	78
AM1D-1512SH60Z	13.5-16.5	12	83	6000	83	8	220	80
AM1D-1515SH60Z	13.5-16.5	15	67	6000	84	12	220	79
AM1D-1518SH60Z	13.5-16.5	18	56	6000	83	10	220	80
AM1D-1524SH60Z	13.5-16.5	24	42	6000	80	5	220	83
AM1D-2403SH60Z	21.6-26.4	3.3	303	6000	56	8	220	74
AM1D-2405SH60Z	21.6-26.4	5	200	6000	54	6	220	77
AM1D-2407SH60Z	21.6-26.4	7.2	139	6000	57	6	220	73
AM1D-2409SH60Z	21.6-26.4	9	111	6000	55	6	220	76
AM1D-2412SH60Z	21.6-26.4	12	83	6000	53	6	220	78
AM1D-2415SH60Z	21.6-26.4	15	67	6000	52	5	220	80
AM1D-2418SH60Z	21.6-26.4	18	56	6000	51	5	220	82
AM1D-2424SH60Z	21.6-26.4	24	42	6000	52	8	220	80

Models

Dual output

Model	Input Voltage (V)	Output Voltage (V)	Output Current Max (mA)	Isolation (VDC)	Input Current Full Load | No Load (mA)		Max Capacitive Load (uF)	Efficiency (%)
AM1D-0303DZ	2.97-3.63	±3.3	±152	1000	459	30	±100	66
AM1D-0305DZ	2.97-3.63	±5	±100	1000	433	30	±100	70
AM1D-0307DZ	2.97-3.63	±7.2	±69	1000	421	30	±100	72
AM1D-0309DZ	2.97-3.63	±9	±56	1000	404	26	±100	75
AM1D-0312DZ	2.97-3.63	±12	±42	1000	394	30	±100	77
AM1D-0315DZ	2.97-3.63	±15	±33	1000	389	30	±100	78
AM1D-0318DZ	2.97-3.63	±18	±28	1000	404	25	±100	75
AM1D-0324DZ	2.97-3.63	±24	±21	1000	404	25	±100	75
AM1D-0503DZ	4.5-5.5	±3.3	±152	1000	299	20	±100	67
AM1D-0505DZ	4.5-5.5	±5	±100	1000	270	20	±100	74
AM1D-0507DZ	4.5-5.5	±7.2	±69	1000	253	15	±100	79
AM1D-0509DZ	4.5-5.5	±9	±56	1000	247	15	±100	81
AM1D-0512DZ	4.5-5.5	±12	±42	1000	250	20	±100	80
AM1D-0515DZ	4.5-5.5	±15	±33	1000	244	20	±100	82
AM1D-0518DZ	4.5-5.5	±18	±27	1000	247	22	±100	81
AM1D-0524DZ	4.5-5.5	±24	±21	1000	247	22	±100	81
AM1D-1203DZ	10.8-13.2	±3.3	±152	1000	123	13	±100	68
AM1D-1205DZ	10.8-13.2	±5	±100	1000	123	10	±100	74
AM1D-1207DZ	10.8-13.2	±7.2	±69	1000	110	10	±100	76
AM1D-1209DZ	10.8-13.2	±9	±56	1000	110	13	±100	78
AM1D-1212DZ	10.8-13.2	±12	±42	1000	102	10	±100	82

AM1D-1215DZ	10.8-13.2	±15	±33	1000	102	10	±100	82
AM1D-1218DZ	10.8-13.2	±18	±28	1000	102	10	±100	82
AM1D-1224DZ	10.8-13.2	±24	±21	1000	111	20	±100	75
AM1D-1503DZ	13.5-16.5	±3.3	±152	1000	89	20	±100	75
AM1D-1505DZ	13.5-16.5	±5	±100	1000	89	20	±100	75
AM1D-1507DZ	13.5-16.5	±7.2	±69	1000	89	18	±100	75
AM1D-1509DZ	13.5-16.5	±9	±56	1000	87	18	±100	77
AM1D-1512DZ	13.5-16.5	±12	±42	1000	87	20	±100	77
AM1D-1515DZ	13.5-16.5	±15	±33	1000	87	20	±100	77
AM1D-1518DZ	13.5-16.5	±18	±28	1000	89	15	±100	75
AM1D-1524DZ	13.5-16.5	±24	±21	1000	89	15	±100	75
AM1D-2403DZ	21.6-26.4	±3.3	±152	1000	62	7	±100	67
AM1D-2405DZ	21.6-26.4	±5	±100	1000	56	6	±100	74
AM1D-2407DZ	21.6-26.4	±7.2	±69	1000	56	7	±100	78
AM1D-2409DZ	21.6-26.4	±9	±56	1000	56	7	±100	78
AM1D-2412DZ	21.6-26.4	±12	±42	1000	52	6	±100	80
AM1D-2415DZ	21.6-26.4	±15	±33	1000	52	8	±100	80
AM1D-2418DZ	21.6-26.4	±18	±28	1000	51	6	±100	81
AM1D-2424DZ	21.6-26.4	±24	±21	1000	51	8	±100	82
AM1D-0303DH30Z	2.97-3.63	±3.3	±152	3000	459	30	±100	66
AM1D-0305DH30Z	2.97-3.63	±5	±100	3000	433	30	±100	70
AM1D-0307DH30Z	2.97-3.63	±7.2	±69	3000	421	30	±100	72
AM1D-0309DH30Z	2.97-3.63	±9	±56	3000	404	26	±100	75
AM1D-0312DH30Z	2.97-3.63	±12	±42	3000	394	30	±100	77
AM1D-0315DH30Z	2.97-3.63	±15	±33	3000	389	30	±100	78
AM1D-0318DH30Z	2.97-3.63	±18	±28	3000	404	25	±100	75
AM1D-0324DH30Z	2.97-3.63	±24	±21	3000	404	25	±100	75
AM1D-0503DH30Z	4.5-5.5	±3.3	±152	3000	299	20	±100	67
AM1D-0505DH30Z	4.5-5.5	±5	±100	3000	270	20	±100	74
AM1D-0507DH30Z	4.5-5.5	±7.2	±69	3000	253	15	±100	79
AM1D-0509DH30Z	4.5-5.5	±9	±56	3000	247	15	±100	81
AM1D-0512DH30Z	4.5-5.5	±12	±42	3000	250	20	±100	80
AM1D-0515DH30Z	4.5-5.5	±15	±33	3000	244	20	±100	82
AM1D-0518DH30Z	4.5-5.5	±18	±27	3000	247	22	±100	81
AM1D-0524DH30Z	4.5-5.5	±24	±21	3000	247	22	±100	81
AM1D-1203DH30Z	10.8-13.2	±3.3	±152	3000	123	13	±100	68
AM1D-1205DH30Z	10.8-13.2	±5	±100	3000	123	10	±100	74
AM1D-1207DH30Z	10.8-13.2	±7.2	±69	3000	110	10	±100	76
AM1D-1209DH30Z	10.8-13.2	±9	±56	3000	110	13	±100	78
AM1D-1212DH30Z	10.8-13.2	±12	±42	3000	102	10	±100	82
AM1D-1215DH30Z	10.8-13.2	±15	±33	3000	102	10	±100	82
AM1D-1218DH30Z	10.8-13.2	±18	±28	3000	102	10	±100	82
AM1D-1224DH30Z	10.8-13.2	±24	±21	3000	111	20	±100	75
AM1D-1503DH30Z	13.5-16.5	±3.3	±152	3000	89	20	±100	75
AM1D-1505DH30Z	13.5-16.5	±5	±100	3000	89	20	±100	75
AM1D-1507DH30Z	13.5-16.5	±7.2	±69	3000	89	18	±100	75
AM1D-1509DH30Z	13.5-16.5	±9	±56	3000	87	18	±100	77
AM1D-1512DH30Z	13.5-16.5	±12	±42	3000	87	20	±100	77
AM1D-1515DH30Z	13.5-16.5	±15	±33	3000	87	20	±100	77
AM1D-1518DH30Z	13.5-16.5	±18	±28	3000	89	15	±100	75
AM1D-1524DH30Z	13.5-16.5	±24	±21	3000	89	15	±100	75
AM1D-2403DH30Z	21.6-26.4	±3.3	±152	3000	62	7	±100	67
AM1D-2405DH30Z	21.6-26.4	±5	±100	3000	56	6	±100	74
AM1D-2407DH30Z	21.6-26.4	±7.2	±69	3000	56	7	±100	78
AM1D-2409DH30Z	21.6-26.4	±9	±56	3000	56	7	±100	78
AM1D-2412DH30Z	21.6-26.4	±12	±42	3000	52	6	±100	80
AM1D-2415DH30Z	21.6-26.4	±15	±33	3000	52	8	±100	80
AM1D-2418DH30Z	21.6-26.4	±18	±28	3000	51	6	±100	81
AM1D-2424DH30Z	21.6-26.4	±24	±21	3000	51	8	±100	82

AM1D-0303DH40Z	2.97-3.63	±3.3	±152	4000	459	30	±100	66
AM1D-0305DH40Z	2.97-3.63	±5	±100	4000	433	30	±100	70
AM1D-0307DH40Z	2.97-3.63	±7.2	±69	4000	421	30	±100	72
AM1D-0309DH40Z	2.97-3.63	±9	±56	4000	404	26	±100	75
AM1D-0312DH40Z	2.97-3.63	±12	±42	4000	394	30	±100	77
AM1D-0315DH40Z	2.97-3.63	±15	±33	4000	389	30	±100	78
AM1D-0318DH40Z	2.97-3.63	±18	±28	4000	404	25	±100	75
AM1D-0324DH40Z	2.97-3.63	±24	±21	4000	404	25	±100	75
AM1D-0503DH40Z	4.5-5.5	±3.3	±152	4000	299	20	±100	67
AM1D-0505DH40Z	4.5-5.5	±5	±100	4000	270	20	±100	74
AM1D-0507DH40Z	4.5-5.5	±7.2	±69	4000	253	15	±100	79
AM1D-0509DH40Z	4.5-5.5	±9	±56	4000	247	15	±100	81
AM1D-0512DH40Z	4.5-5.5	±12	±42	4000	250	20	±100	80
AM1D-0515DH40Z	4.5-5.5	±15	±33	4000	244	20	±100	82
AM1D-0518DH40Z	4.5-5.5	±18	±27	4000	247	22	±100	81
AM1D-0524DH40Z	4.5-5.5	±24	±21	4000	247	22	±100	81
AM1D-1203DH40Z	10.8-13.2	±3.3	±152	4000	123	13	±100	68
AM1D-1205DH40Z	10.8-13.2	±5	±100	4000	123	10	±100	74
AM1D-1207DH40Z	10.8-13.2	±7.2	±69	4000	110	10	±100	76
AM1D-1209DH40Z	10.8-13.2	±9	±56	4000	110	13	±100	78
AM1D-1212DH40Z	10.8-13.2	±12	±42	4000	102	10	±100	82
AM1D-1215DH40Z	10.8-13.2	±15	±33	4000	102	10	±100	82
AM1D-1218DH40Z	10.8-13.2	±18	±28	4000	102	10	±100	82
AM1D-1224DH40Z	10.8-13.2	±24	±21	4000	111	20	±100	75
AM1D-1503DH40Z	13.5-16.5	±3.3	±152	4000	89	20	±100	75
AM1D-1505DH40Z	13.5-16.5	±5	±100	4000	89	20	±100	75
AM1D-1507DH40Z	13.5-16.5	±7.2	±69	4000	89	18	±100	75
AM1D-1509DH40Z	13.5-16.5	±9	±56	4000	87	18	±100	77
AM1D-1512DH40Z	13.5-16.5	±12	±42	4000	87	20	±100	77
AM1D-1515DH40Z	13.5-16.5	±15	±33	4000	87	20	±100	77
AM1D-1518DH40Z	13.5-16.5	±18	±28	4000	89	15	±100	75
AM1D-1524DH40Z	13.5-16.5	±24	±21	4000	89	15	±100	75
AM1D-2403DH40Z	21.6-26.4	±3.3	±152	4000	62	7	±100	67
AM1D-2405DH40Z	21.6-26.4	±5	±100	4000	56	6	±100	74
AM1D-2407DH40Z	21.6-26.4	±7.2	±69	4000	56	7	±100	78
AM1D-2409DH40Z	21.6-26.4	±9	±56	4000	56	7	±100	78
AM1D-2412DH40Z	21.6-26.4	±12	±42	4000	52	6	±100	80
AM1D-2415DH40Z	21.6-26.4	±15	±33	4000	52	8	±100	80
AM1D-2418DH40Z	21.6-26.4	±18	±28	4000	51	6	±100	81
AM1D-2424DH40Z	21.6-26.4	±24	±21	4000	51	8	±100	82
AM1D-0303DH52Z	2.97-3.63	±3.3	±152	5200	459	30	±100	66
AM1D-0305DH52Z	2.97-3.63	±5	±100	5200	433	30	±100	70
AM1D-0307DH52Z	2.97-3.63	±7.2	±69	5200	421	30	±100	72
AM1D-0309DH52Z	2.97-3.63	±9	±56	5200	404	26	±100	75
AM1D-0312DH52Z	2.97-3.63	±12	±42	5200	394	30	±100	77
AM1D-0315DH52Z	2.97-3.63	±15	±33	5200	389	30	±100	78
AM1D-0318DH52Z	2.97-3.63	±18	±28	5200	404	25	±100	75
AM1D-0324DH52Z	2.97-3.63	±24	±21	5200	404	25	±100	75
AM1D-0503DH52Z	4.5-5.5	±3.3	±152	5200	299	20	±100	67
AM1D-0505DH52Z	4.5-5.5	±5	±100	5200	270	20	±100	74
AM1D-0507DH52Z	4.5-5.5	±7.2	±69	5200	253	15	±100	79
AM1D-0509DH52Z	4.5-5.5	±9	±56	5200	247	15	±100	81
AM1D-0512DH52Z	4.5-5.5	±12	±42	5200	250	20	±100	80
AM1D-0515DH52Z	4.5-5.5	±15	±33	5200	244	20	±100	82
AM1D-0518DH52Z	4.5-5.5	±18	±27	5200	247	22	±100	81
AM1D-0524DH52Z	4.5-5.5	±24	±21	5200	247	22	±100	81
AM1D-1203DH52Z	10.8-13.2	±3.3	±152	5200	123	13	±100	68
AM1D-1205DH52Z	10.8-13.2	±5	±100	5200	123	10	±100	74
AM1D-1207DH52Z	10.8-13.2	±7.2	±69	5200	110	10	±100	76
AM1D-1209DH52Z	10.8-13.2	±9	±56	5200	110	13	±100	78

AM1D-1212DH52Z	10.8-13.2	±12	±42	5200	102	10	±100	82
AM1D-1215DH52Z	10.8-13.2	±15	±33	5200	102	10	±100	82
AM1D-1218DH52Z	10.8-13.2	±18	±28	5200	102	10	±100	82
AM1D-1224DH52Z	10.8-13.2	±24	±21	5200	111	20	±100	75
AM1D-1503DH52Z	13.5-16.5	±3.3	±152	5200	89	20	±100	75
AM1D-1505DH52Z	13.5-16.5	±5	±100	5200	89	20	±100	75
AM1D-1507DH52Z	13.5-16.5	±7.2	±69	5200	89	18	±100	75
AM1D-1509DH52Z	13.5-16.5	±9	±56	5200	87	18	±100	77
AM1D-1512DH52Z	13.5-16.5	±12	±42	5200	87	20	±100	77
AM1D-1515DH52Z	13.5-16.5	±15	±33	5200	87	20	±100	77
AM1D-1518DH52Z	13.5-16.5	±18	±28	5200	89	15	±100	75
AM1D-1524DH52Z	13.5-16.5	±24	±21	5200	89	15	±100	75
AM1D-2403DH52Z	21.6-26.4	±3.3	±152	5200	62	7	±100	67
AM1D-2405DH52Z	21.6-26.4	±5	±100	5200	56	6	±100	74
AM1D-2407DH52Z	21.6-26.4	±7.2	±69	5200	56	7	±100	78
AM1D-2409DH52Z	21.6-26.4	±9	±56	5200	56	7	±100	78
AM1D-2412DH52Z	21.6-26.4	±12	±42	5200	52	6	±100	80
AM1D-2415DH52Z	21.6-26.4	±15	±33	5200	52	8	±100	80
AM1D-2418DH52Z	21.6-26.4	±18	±28	5200	51	6	±100	81
AM1D-2424DH52Z	21.6-26.4	±24	±21	5200	51	8	±100	82
AM1D-0303DH60Z	2.97-3.63	±3.3	±152	6000	459	30	±100	66
AM1D-0305DH60Z	2.97-3.63	±5	±100	6000	433	30	±100	70
AM1D-0307DH60Z	2.97-3.63	±7.2	±69	6000	421	30	±100	72
AM1D-0309DH60Z	2.97-3.63	±9	±56	6000	404	26	±100	75
AM1D-0312DH60Z	2.97-3.63	±12	±42	6000	394	30	±100	77
AM1D-0315DH60Z	2.97-3.63	±15	±33	6000	389	30	±100	78
AM1D-0318DH60Z	2.97-3.63	±18	±28	6000	404	25	±100	75
AM1D-0324DH60Z	2.97-3.63	±24	±21	6000	404	25	±100	75
AM1D-0503DH60Z	4.5-5.5	±3.3	±152	6000	299	20	±100	67
AM1D-0505DH60Z	4.5-5.5	±5	±100	6000	270	20	±100	74
AM1D-0507DH60Z	4.5-5.5	±7.2	±69	6000	253	15	±100	79
AM1D-0509DH60Z	4.5-5.5	±9	±56	6000	247	15	±100	81
AM1D-0512DH60Z	4.5-5.5	±12	±42	6000	250	20	±100	80
AM1D-0515DH60Z	4.5-5.5	±15	±33	6000	244	20	±100	82
AM1D-0518DH60Z	4.5-5.5	±18	±27	6000	247	22	±100	81
AM1D-0524DH60Z	4.5-5.5	±24	±21	6000	247	22	±100	81
AM1D-1203DH60Z	10.8-13.2	±3.3	±152	6000	123	13	±100	68
AM1D-1205DH60Z	10.8-13.2	±5	±100	6000	123	10	±100	74
AM1D-1207DH60Z	10.8-13.2	±7.2	±69	6000	110	10	±100	76
AM1D-1209DH60Z	10.8-13.2	±9	±56	6000	110	13	±100	78
AM1D-1212DH60Z	10.8-13.2	±12	±42	6000	102	10	±100	82
AM1D-1215DH60Z	10.8-13.2	±15	±33	6000	102	10	±100	82
AM1D-1218DH60Z	10.8-13.2	±18	±28	6000	102	10	±100	82
AM1D-1224DH60Z	10.8-13.2	±24	±21	6000	111	20	±100	75
AM1D-1503DH60Z	13.5-16.5	±3.3	±152	6000	89	20	±100	75
AM1D-1505DH60Z	13.5-16.5	±5	±100	6000	89	20	±100	75
AM1D-1507DH60Z	13.5-16.5	±7.2	±69	6000	89	18	±100	75
AM1D-1509DH60Z	13.5-16.5	±9	±56	6000	87	18	±100	77
AM1D-1512DH60Z	13.5-16.5	±12	±42	6000	87	20	±100	77
AM1D-1515DH60Z	13.5-16.5	±15	±33	6000	87	20	±100	77
AM1D-1518DH60Z	13.5-16.5	±18	±28	6000	89	15	±100	75
AM1D-1524DH60Z	13.5-16.5	±24	±21	6000	89	15	±100	75
AM1D-2403DH60Z	21.6-26.4	±3.3	±152	6000	62	7	±100	67
AM1D-2405DH60Z	21.6-26.4	±5	±100	6000	56	6	±100	74
AM1D-2407DH60Z	21.6-26.4	±7.2	±69	6000	56	7	±100	78
AM1D-2409DH60Z	21.6-26.4	±9	±56	6000	56	7	±100	78
AM1D-2412DH60Z	21.6-26.4	±12	±42	6000	52	6	±100	80
AM1D-2415DH60Z	21.6-26.4	±15	±33	6000	52	8	±100	80
AM1D-2418DH60Z	21.6-26.4	±18	±28	6000	51	6	±100	81
AM1D-2424DH60Z	21.6-26.4	±24	±21	6000	51	8	±100	82

Models

Dual separated output

Model	Input Voltage (V)	Output Voltage (V)	Output Current max (mA)	Isolation (VDC)	Input Current Full Load | No Load (mA)		Max Capacitive Load (uF)	Efficiency (%)
AM1D-050303DZ	4.5-5.5	3.3/3.3	151/151	1000	256	15	100	75
AM1D-050505DZ	4.5-5.5	5/5	100/100	1000	247	17	100	75
AM1D-050707DZ	4.5-5.5	7.2/7.2	69/69	1000	247	16	100	77
AM1D-050909DZ	4.5-5.5	9/9	56/56	1000	244	15	100	79
AM1D-051212DZ	4.5-5.5	12/12	42/42	1000	253	17	100	80
AM1D-051515DZ	4.5-5.5	15/15	33 /33	1000	233	17	100	82
AM1D-051818DZ	4.5-5.5	18/18	27/27	1000	241	16	100	79
AM1D-052424DZ	4.5-5.5	24/24	20/20	1000	244	20	100	77
AM1D-120303DZ	10.8-13.2	3.3/3.3	151/151	1000	111	12	100	65
AM1D-120505DZ	10.8-13.2	5/5	100/100	1000	105	14	100	75
AM1D-120707DZ	10.8-13.2	7.2/7.2	69/69	1000	111	14	100	77
AM1D-120909DZ	10.8-13.2	9/9	56/56	1000	104	9	100	77
AM1D-121212DZ	10.8-13.2	12/12	42/42	1000	105	13	100	80
AM1D-121515DZ	10.8-13.2	15/15	33 /33	1000	102	10	100	81
AM1D-121818DZ	10.8-13.2	18/18	27/27	1000	103	11	100	75
AM1D-122424DZ	10.8-13.2	24/24	20/20	1000	110	20	100	74
AM1D-240303DZ	21.6-26.4	3.3/3.3	151/151	1000	56	8	100	66
AM1D-240505DZ	21.6-26.4	5/5	100/100	1000	54	6	100	75
AM1D-240707DZ	21.6-26.4	7.2/7.2	69/69	1000	57	6	100	77
AM1D-240909DZ	21.6-26.4	9/9	56/56	1000	55	6	100	79
AM1D-241212DZ	21.6-26.4	12/12	42/42	1000	53	6	100	82
AM1D-241515DZ	21.6-26.4	15/15	33 /33	1000	52	5	100	82
AM1D-241818DZ	21.6-26.4	18/18	27/27	1000	51	5	100	78
AM1D-242424DZ	21.6-26.4	24/24	20/20	1000	52	8	100	76

NOTE: All specifications in this datasheet are measured at an ambient temperature of 25°C, humidity<75%, nominal input voltage and at rated output load unless otherwise specified.

Input Specifications

Parameters	Nominal	Typical	Maximum	Units
Voltage range	3.3	2.97-3.63		VDC
	5	4.5-5.5		
	12	10.8-13.2		
	15	13.5-16.5		
	24	21.6-26.4		
Filter	Capacitor			
Input reflected input current*		20		mA p-p
Absolute Maximum Rating	3.3 Vin	0-6		VDC
	5 Vin	0-7		
	12 Vin	0-15		
	15 Vin	0-20		
	24 Vin	0-28		
Peak Input Voltage time		100		ms

*Measured with 12µH source inductance and 47µF (ESR<1Ω at 100KHz) source capacitor.
NOTE: For front end protection, a slow blow fuse should be added: 800mA for 3.3V input models, 500mA for 5V input models and 300mA for all others.

Isolation Specifications

Parameters	Conditions	Typical	Rated	Units
Tested I/O voltage	60 sec		1000, 3000, 4000, 5200 & 6000	VDC
Resistance		> 1000		MOhm
Capacitance		60		pF

Output Specifications

Parameters	Conditions	Typical	Maximum	Units
Voltage accuracy	Dual separated output models	±3		%
Voltage accuracy	Other models		±3	%
Line voltage regulation	For 1.0% of Vin	±1.2		%
Load voltage regulation	Dual separated output models, load 20~100%	±10		%
Load voltage regulation	Dual separated 3.3V output models, load 20~100%	±20		%
Load voltage regulation	Other models, load 20~100%		±10	%
Load voltage regulation	Other 3.3V output models, load 20~100%		±20	%
Temperature coefficient		±0.02		%/°C
Ripple & Noise	Dual separated output models, At 20MHz Bandwidth	75		mV p-p
Ripple & Noise	Other models, At 20MHz Bandwidth		75	mV p-p

General Specifications

Parameters	Conditions	Typical	Maximum	Units
Switching frequency	100% load, variable	80		KHz
Operating temperature	Full Load without Derating	-40 to +85		°C
Storage temperature		-40 to +125		°C
Max Case temperature			+100	°C
Cooling	Free air convection			
Humidity			95	%
Altitude			3000	m
Case material	Non-conductive black plastic UL 94 V-0			
Weight		2.3		g
Dimensions (L x W x H)	0.76 x 0.24 x 0.39 inch 19.50 x 6.00 x 10.00 mm			
MTBF	>1 121 000 hrs (MIL-HDBK -217F, Ground Benign, t=+25°C)			

Safety Specifications

Standards	
Agency approvals	cULus & CE (with exception of dual separated models)
Safety	EN/UL 60950-1, 62368-1
	EN55032, class B, with the recommended EMI circuit (with exception of dual separated models)
	EN55024 (Noise Immunity)
	IEC61000-4-2(ESD) Criteria A
	IEC61000-4-3(Radiated immunity) Criteria A
	IEC61000-4-4(EFT) Criteria A, with the recommended EFT/Surge external circuit
	IEC61000-4-5(Surge) Criteria A, with the recommended EFT/Surge external circuit
	IEC61000-4-6(CS) Criteria A
	IEC61000-4-8(PFMF) Criteria A

Pin Out Specifications

Pin	Single 1000 VDC	Dual 1000 VDC	Dual Separated 1000 VDC	Single 3000, 4000, 5200 & 6000 VDC	Dual 3000, 4000, 5200 & 6000 VDC
1	+ V Input	+ V Input	+V Input	+ V Input	+ V Input
2	- V Input	- V Input	-V Input	- V Input	- V Input
4	- V Output	- V Output	+V1 Output	No pin	No pin
5	No pin	Common	-V1 Output	- V Output	- V Output
6	+ V Output	+ V Output	+V2 Output	No pin	Common
7	No pin	No pin	-V2 Output	+ V Output	+ V Output

Dimensions:

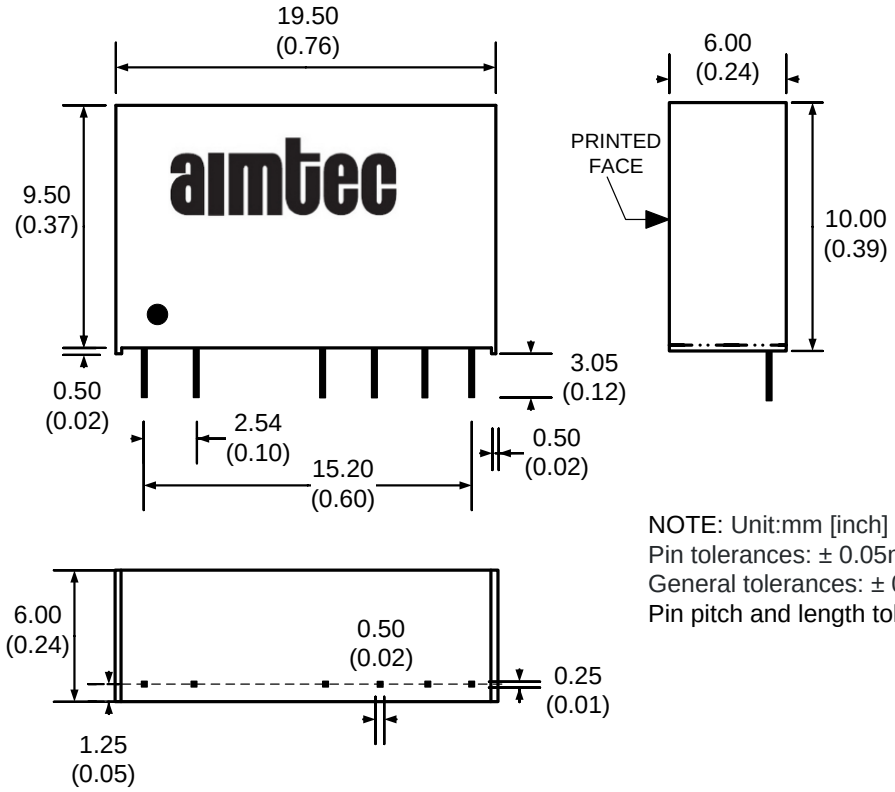

NOTE: Unit:mm [inch]
Pin tolerances: ± 0.05mm [± 0.002inch]
General tolerances: ± 0.5mm [± 0.02inch]
Pin pitch and length tolerance: ±0.35 (±0.014)

Input Reflected Ripple Test Circuit

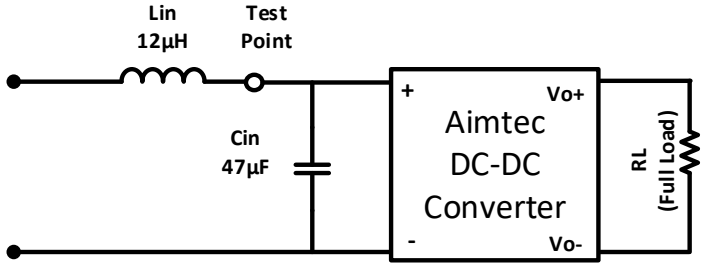

* Tested at full load, and nominal input

Class B EMI, external filter

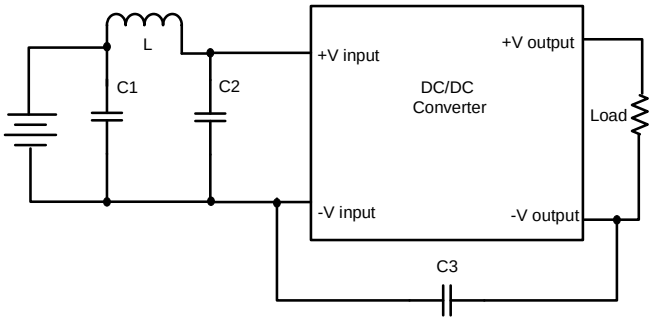

Vin	C1	C2	L	C3
3.3, 5, 12, 15 VDC	2.2µF/100V	-	18µH	-
24VDC		2.2µF/100V		470pF/2KV

EFT/Surge Application circuit

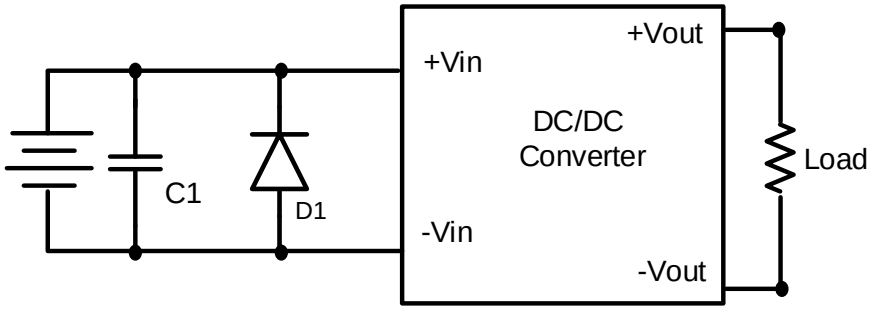

Vin	C1	D1
3.3VDC	2200µF/100V	TVS, 5V
5VDC		TVS, 6.5V
12VDC		TVS, 14V
15VDC		TVS, 18V
24VDC		TVS, 26V

Typical Efficiency Chart Examples

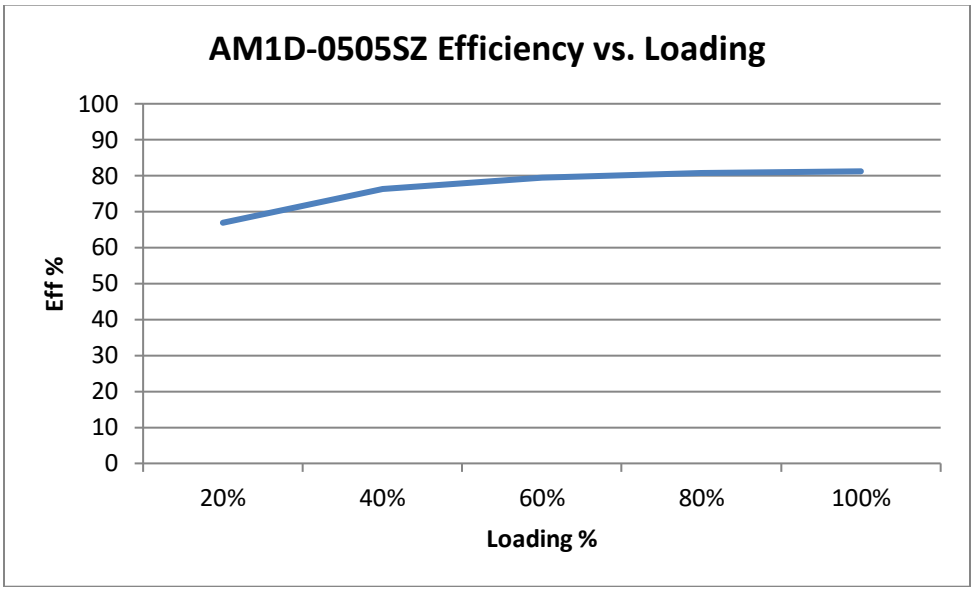

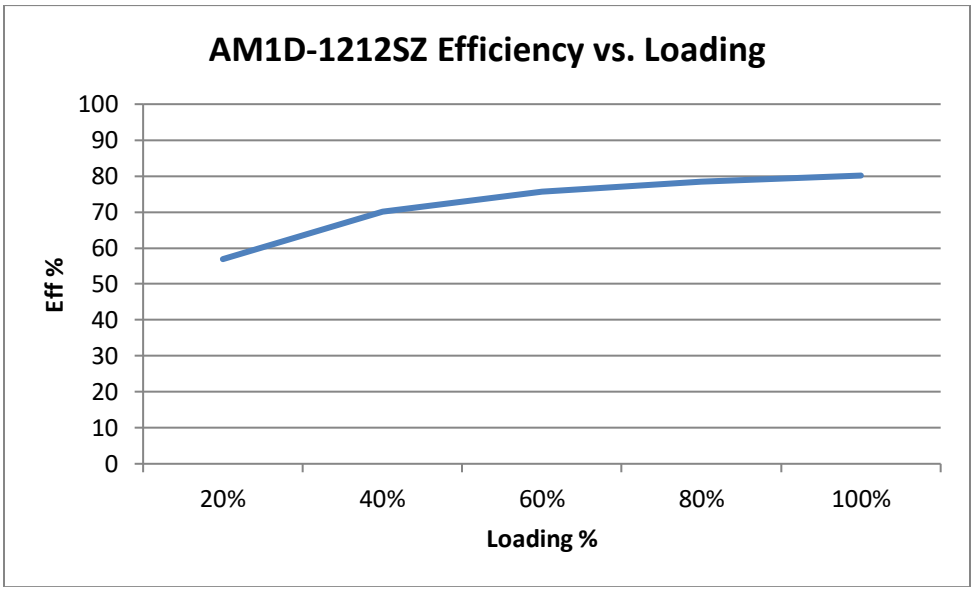

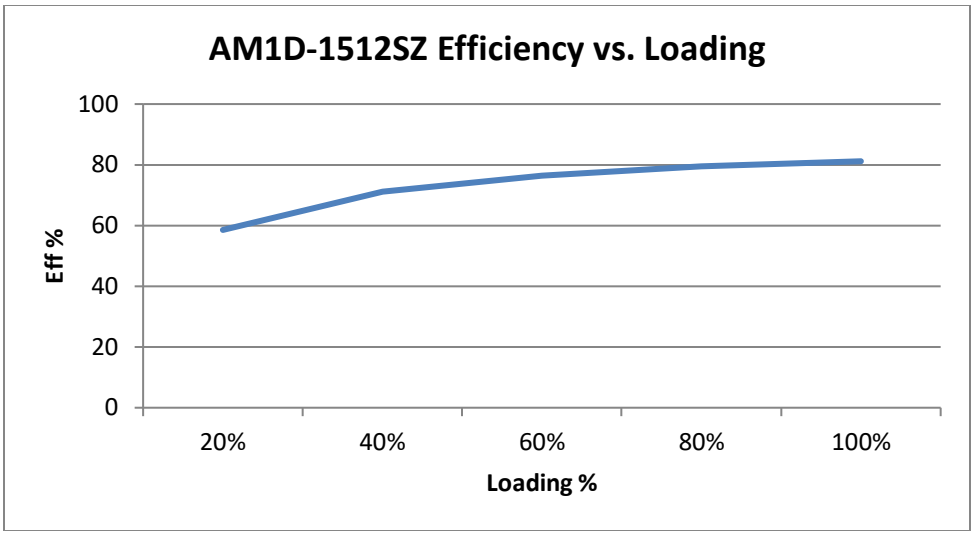

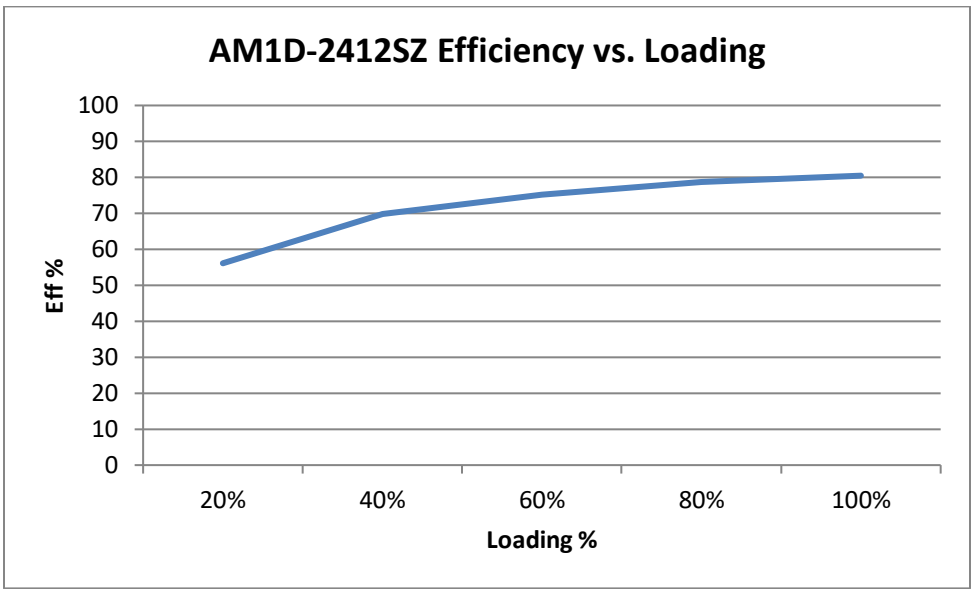

NOTE: 1. Datasheets are updated as needed and as such, specifications are subject to change without notice. Once printed or downloaded, datasheets are no longer controlled by Aimtec; refer to www.aimtec.com for the most current product specifications. **2.** Product labels shown, including safety agency certifications on labels, may vary based on the date manufactured. **3.** Mechanical drawings and specifications are for reference only. **4.** All specifications are measured at an ambient temperature of 25°C, humidity<75%, nominal input voltage and at rated output load unless otherwise specified. **5.** Aimtec may not have conducted destructive testing or chemical analysis on all internal components and chemicals at the time of publishing this document. CAS numbers and other limited information are considered proprietary and may not be available for release. **6.** This product is not designed for use in critical life support systems, equipment used in hazardous environments, nuclear control systems or other such applications which necessitate specific safety and regulatory standards other the ones listed in this datasheet. **7.** Warranty is in accordance with Aimtec's standard Terms of Sale available at www.aimtec.com.