aimtec
Your Power Partner

Series AM2GH-Z
2 Watt | DC-DC Converter



FEATURES:

- SIP8 Package
- Low Ripple and Noise
- Continuous Short Circuit Protection
- -40ºC to +85ºC Operating Temperature Range
- Ultra-Wide Input Range 4:1
- 1600 VDC I/O Isolation
- Efficiency up to 79%
- Remote ON/OFF Control

RoHS CE

Models
Single output

Model	Input Voltage (V)	Output Voltage (V)	Output Current Max (mA)	Maximum Capacitive Load (µF)	Input Current Full Load | No Load (mA)		Efficiency (%)
AM2GH-1203SZ	4.5-18	3.3	500	1000	196	40	70
AM2GH-1205SZ	4.5-18	5	400	1000	225	40	74
AM2GH-1212SZ	4.5-18	12	167	220	213	40	78
AM2GH-1215SZ	4.5-18	15	133	100	213	40	78
AM2GH-2403SZ	9-36	3.3	500	1000	96	25	71
AM2GH-2405SZ	9-36	5	400	1000	106	20	78
AM2GH-2412SZ	9-36	12	167	220	105	30	79
AM2GH-2415SZ	9-36	15	133	100	105	30	79
AM2GH-4803SZ	18-75	3.3	500	1000	47	10	72
AM2GH-4805SZ	18-75	5	400	1000	55	15	75
AM2GH-4812SZ	18-75	12	167	220	55	15	75
AM2GH-4815SZ	18-75	15	133	100	54	15	76

Models
Dual output

Model	Input Voltage (V)	Output Voltage (V)	Output Current Max (mA)	Maximum Capacitive Load (µF)	Input Current Full Load | No Load (mA)		Efficiency (%)
AM2GH-1205DZ	4.5-18	±5	±200	±470	219	30	77
AM2GH-1212DZ	4.5-18	±12	±83	±100	213	30	78
AM2GH-1215DZ	4.5-18	±15	±66	±47	216	40	77
AM2GH-2405DZ	9-36	±5	±200	±470	111	30	75
AM2GH-2412DZ	9-36	±12	±83	±100	108	30	77
AM2GH-2415DZ	9-36	±15	±66	±47	106	30	78
AM2GH-4805DZ	18-75	±5	±200	±470	56	15	74
AM2GH-4812DZ	18-75	±12	±83	±100	56	15	74
AM2GH-4815DZ	18-75	±15	±66	±47	55	15	75

NOTE: All specifications in this datasheet are measured at an ambient temperature of 25°C, humidity<75%, nominal input voltage and at rated output load unless otherwise specified.

Input Specifications

Parameters	Nominal	Typical	Maximum	Units
Voltage range	12 24 48	4.5-18 9-36 18-75		VDC
Filter	Capacitor			
Start up time		30		ms
Absolute Maximum Rating	12 24 48		25 50 100	VDC
Peak Input Voltage time			100	ms
On/Off control	ON: 0 to 0.6VDC (or open) ; OFF:2.7 to 15.0VDC, OFF idle current: 2-4mA			
No Load Input Current			40	mA
Input reflected current*		20		mA

* The input reflected ripple current should be measured with connected 12µH inductor and a 47µF capacitor.

Isolation Specifications

Parameters	Conditions	Typical	Rated	Units
Tested I/O voltage	60 sec		1600	VDC
Resistance		>1000		MOhm
Capacitance		200		pF

Output Specifications

Parameters	Conditions	Typical	Maximum	Units
Voltage accuracy			±1	%
Cross Regulation (Dual Output)	25% load on 1st output - 100% load on 2nd load	±5		%
Short Circuit protection	Continuous			
Short circuit restart	Auto-Recovery			
Line voltage regulation			±0.2	%
Load voltage regulation	0% to 100% load for single output models 10% to 100% load for dual output models		±1	%
Temperature coefficient		±0.02		%/°C
Ripple & Noise *	20MHz Bandwidth		30	mV p-p

* Measured with a 1µF CC.

General Specifications

Parameters	Conditions	Typical	Maximum	Units
Switching frequency	100% load	100		KHz
Operating temperature		-40 to 85		°C
Storage temperature		-40 to +125		°C
Maximum case temperature			100	°C
Derating	Above 71°C	5		%/ °C
Cooling	Free Air Convection			
Humidity			95	% RH
Case material	Non conductive black plastic			
Potting Material	Silicon (UL94V-0 rated)			
Weight		4.5		g
Dimensions (L x W x H)	0.86 x 0.36 x 0.44 inches	21.85 x 9.20 x 11.10 mm		
MTBF	>1,700,000 hrs (MIL-HDBK -217F, Ground Benign, t=+25°C)hours			
Maximum soldering temperature	1.5mm from case for 10 second		260	°C
Transient recovery time	25% load step change, 25% to 100%	250		uS
Transient recovery deviation	25% load step change, 25% to 100%		±3	%

Safety Specifications

Parameter	
Agency Approvals	CE
Standards	Designed to meet IEC60950-1, 62368-1
	EN55032 , Class A with the recommended circuit
	IEC61000-4-2, Perf. Criteria A
	IEC61000-4-3, Perf. Criteria A
	IEC61000-4-4, Perf. Criteria A (external 220uF/100V cap required)
	IEC61000-4-5, Perf. Criteria A (external 220uF/100V cap required)
	IEC61000-4-6, Perf. Criteria A
	IEC61000-4-8, Perf, Criteria A

Dimensions

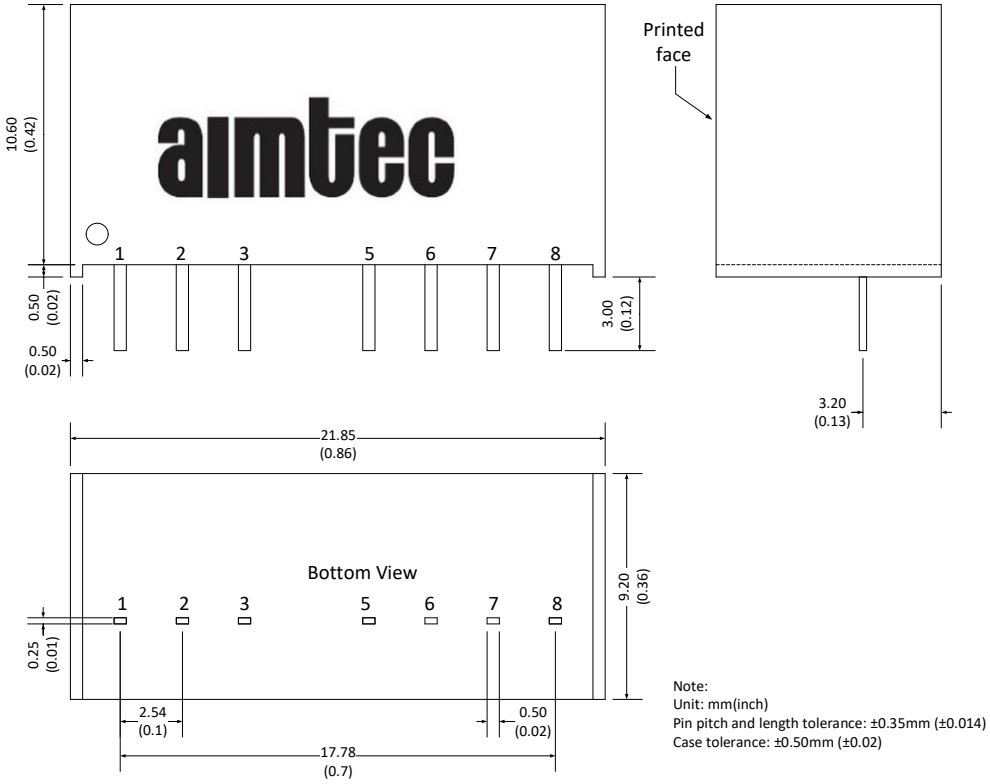

Pin	Single	Dual
1	- V Input	- V Input
2	+ V Input	+ V Input
3	On/Off Control	On/Off Control
5	N.C.	N.C.
6	+ V Output	+ V Output
7	- V Output	Common
8	N.C.	- V Output
NC: Not Connected		

Note:
Unit: mm(inch)
Pin pitch and length tolerance: ±0.35mm (±0.014)
Case tolerance: ±0.50mm (±0.02)

Derating

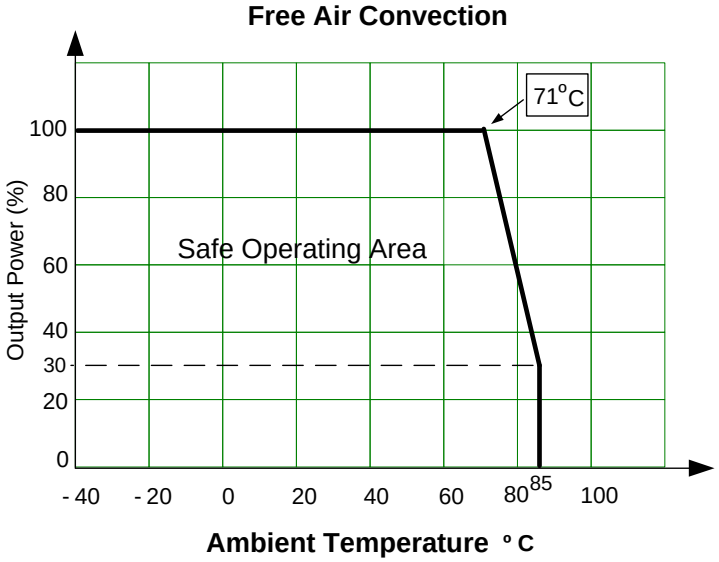

Control ON/OFF pin connection example

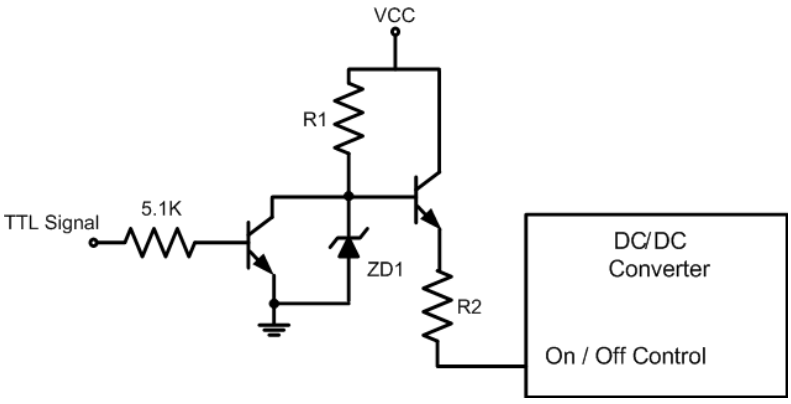

VCC (VDC)	R1 (KΩ)	R2(KΩ)	ZD1(V , mA)
4.5 -18	7.5	0	10, 5
9 - 36	18	2.2	18, 5
18 - 75	33	6.8	36, 5

Recommended Circuits

Conducted and Radiated Emissions

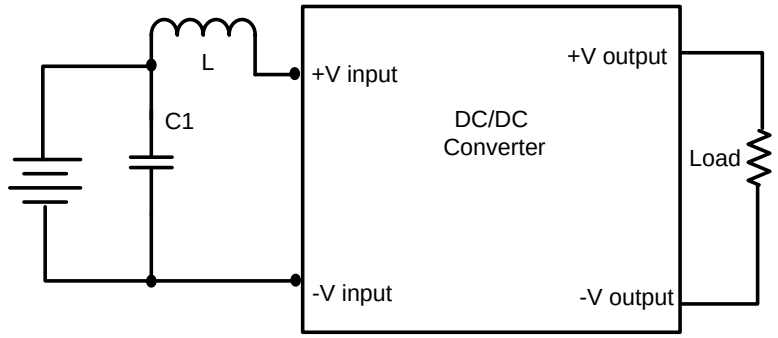

Input Voltage (V)	C1 (uF/V)	L(uH)
12	10/35	2.5
24	2.2/100	10
48	2.2/100	18

EFT / Surge

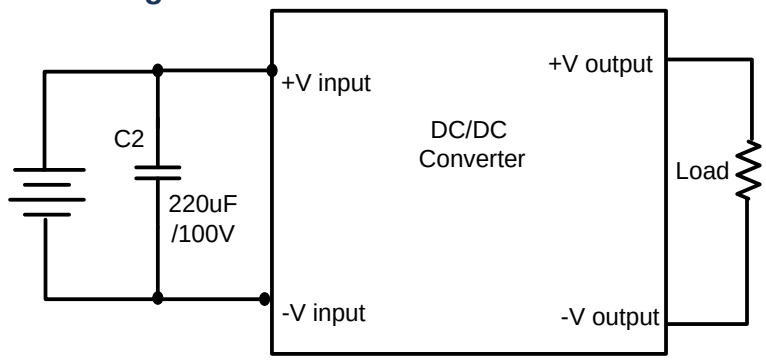

Typical Efficiency Example Charts

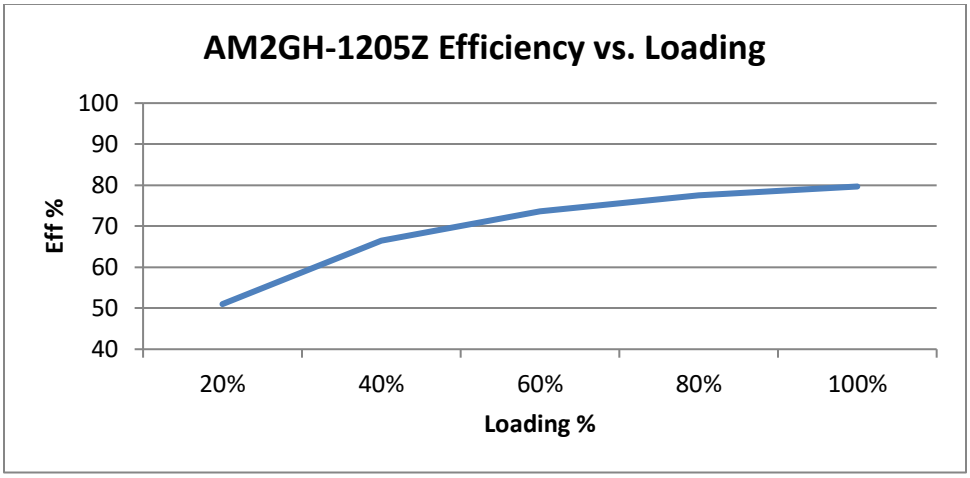

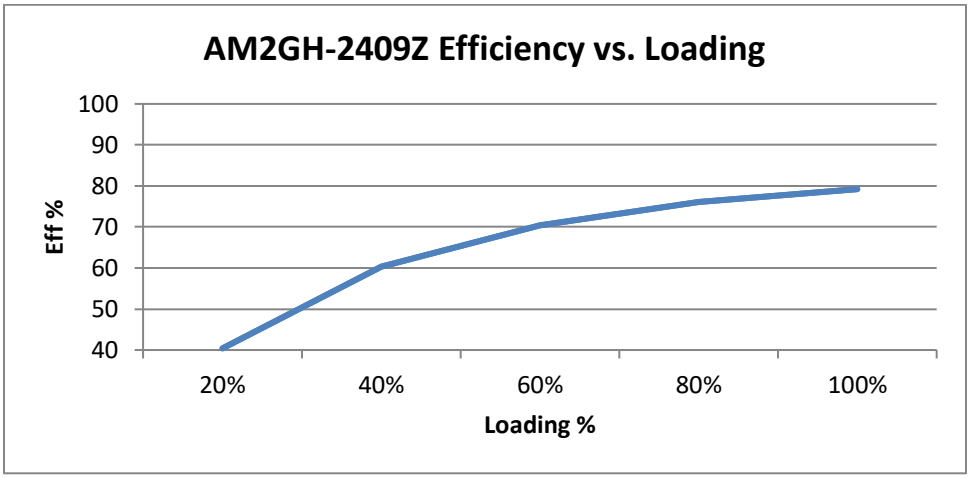

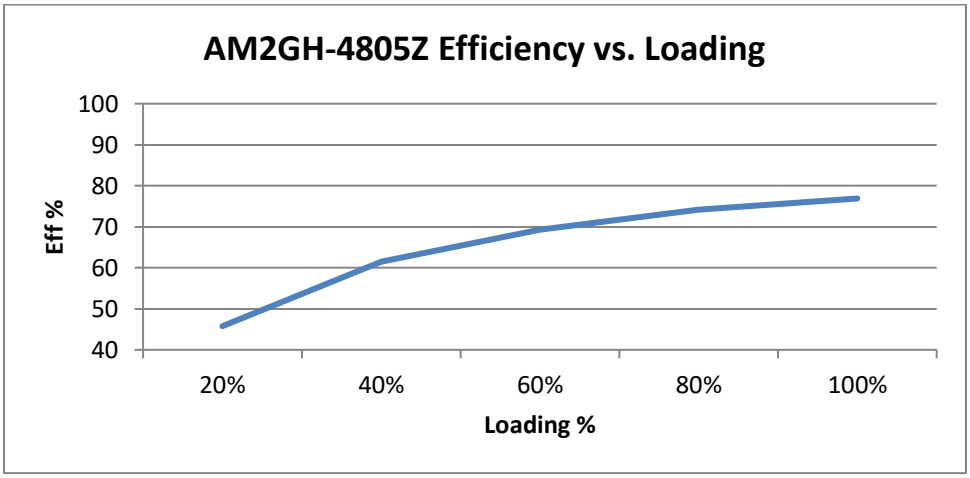

NOTE: 1. Datasheets are updated as needed and as such, specifications are subject to change without notice. Once printed or downloaded, datasheets are no longer controlled by Aimtec; refer to www.aimtec.com for the most current product specifications. **2.** Product labels shown, including safety agency certifications on labels, may vary based on the date manufactured. **3.** Mechanical drawings and specifications are for reference only. **4.** All specifications are measured at an ambient temperature of 25°C, humidity<75%, nominal input voltage and at rated output load unless otherwise specified. **5.** Aimtec may not have conducted destructive testing or chemical analysis on all internal components and chemicals at the time of publishing this document. CAS numbers and other limited information are considered proprietary and may not be available for release. **6.** This product is not designed for use in critical life support systems, equipment used in hazardous environments, nuclear control systems or other such applications which necessitate specific safety and regulatory standards other the ones listed in this datasheet. **7.** Warranty is in accordance with Aimtec's standard Terms of Sale available at www.aimtec.com.