aimtec
Your Power Partner

Series AM3G-NZ

3 Watt | DC-DC Converter

FEATURES:



- 1500 and 3000VDC I/O Isolation
- Very low no load consumption
- Remote On/Off Control
- 8 pin SIP package
- Operating temperature -40°C to 85°C
- Continuous Short circuit protection
- Wide 2:1 input range
- High efficiency up to 84%

RoHS

Models
Single output

Model	Input Voltage (V)	Output Voltage (V)	Output Current max (mA)	Isolation (VDC)	Capacitive Load (µF)	Efficiency (%)	Ripple & Noise Typ. / Max. (mVp-p)
AM3G-0503S-NZ	4.5-9	3.3	758	1500	1800	68	40 / 75
AM3G-0505S-NZ	4.5-9	5	500	1500	2200	73	40 / 75
AM3G-0509S-NZ	4.5-9	9	278	1500	1000	74	40 / 75
AM3G-0512S-NZ	4.5-9	12	208	1500	680	77	40 / 75
AM3G-0515S-NZ	4.5-9	15	167	1500	470	74	40 / 75
AM3G-0524S-NZ	4.5-9	24	125	1500	330	76	40 / 75
AM3G-1203S-NZ	9-18	3.3	758	1500	2700	75	40 / 75
AM3G-1205S-NZ	9-18	5	600	1500	2200	76	40 / 75
AM3G-1209S-NZ	9-18	9	333	1500	1000	79	40 / 75
AM3G-1212S-NZ	9-18	12	250	1500	680	82	70 / 100
AM3G-1215S-NZ	9-18	15	200	1500	470	83	70 / 100
AM3G-1224S-NZ	9-18	24	125	1500	330	81	100 / 150
AM3G-2403S-NZ	18-36	3.3	758	1500	2700	74	40 / 75
AM3G-2405S-NZ	18-36	5	600	1500	2200	81	40 / 75
AM3G-2409S-NZ	18-36	9	333	1500	1000	83	40 / 75
AM3G-2412S-NZ	18-36	12	250	1500	680	83	40 / 75
AM3G-2415S-NZ	18-36	15	200	1500	470	83	100 / 150
AM3G-2424S-NZ	18-36	24	125	1500	330	83	100 / 150
AM3G-4803S-NZ	36-75	3.3	758	1500	2700	75	100 / 150
AM3G-4805S-NZ	36-75	5	600	1500	2200	76	40 / 75
AM3G-4812S-NZ	36-75	12	250	1500	680	80	40 / 75
AM3G-4815S-NZ	36-75	15	200	1500	470	84	40 / 75
AM3G-4824S-NZ	36-75	24	125	1500	330	82	70 / 100
AM3G-0505SH30-NZ	4.5-9	5	500	3000	2200	73	40 / 75
AM3G-0509SH30-NZ	4.5-9	9	278	3000	1000	74	40 / 75
AM3G-0512SH30-NZ	4.5-9	12	208	3000	680	77	40 / 75
AM3G-0515SH30-NZ	4.5-9	15	167	3000	470	74	40 / 75
AM3G-1203SH30-NZ	9-18	3.3	758	3000	2700	75	40 / 75
AM3G-1205SH30-NZ	9-18	5	600	3000	2200	76	40 / 75
AM3G-1209SH30-NZ	9-18	9	333	3000	1000	79	70 / 100
AM3G-1212SH30-NZ	9-18	12	250	3000	680	82	100 / 150
AM3G-1215SH30-NZ	9-18	15	200	3000	470	83	100 / 150
AM3G-1224SH30-NZ	9-18	24	125	3000	330	81	100 / 150
AM3G-2403SH30-NZ #	18-36	3.3	758	3000	2700	74	40 / 75
AM3G-2405SH30-NZ #	18-36	5	600	3000	2200	81	40 / 75
AM3G-2409SH30-NZ #	18-36	9	333	3000	1000	83	40 / 75
AM3G-2412SH30-NZ #	18-36	12	250	3000	680	83	40 / 75
AM3G-2415SH30-NZ #	18-36	15	200	3000	470	83	100 / 150
AM3G-2424SH30-NZ #	18-36	24	125	3000	330	83	100 / 150
AM3G-4803SH30-NZ	36-75	3.3	758	3000	2700	75	100 / 150
AM3G-4805SH30-NZ	36-75	5	600	3000	2000	76	40 / 75
AM3G-4812SH30-NZ	36-75	12	250	3000	680	80	40 / 75
AM3G-4815SH30-NZ	36-75	15	200	3000	470	84	70 / 100

Models
Dual output

Model	Input Voltage (V)	Output Voltage (V)	Output Current max (mA)	Isolation (VDC)	Capacitive Load (µF)	Efficiency (%)	Ripple & Noise Typ. / Max. (mV)
AM3G-0505D-NZ	4.5-9	±5	±250	1500	±1000	74	40 / 75
AM3G-0512D-NZ	4.5-9	±12	±104	1500	±470	77	40 / 75
AM3G-0515D-NZ	4.5-9	±15	±83	1500	±330	77	40 / 75
AM3G-1205D-NZ	9-18	±5	±300	1500	±1000	78	40 / 75
AM3G-1209D-NZ*	9-18	±9	±167	1500	±680	79	40 / 75
AM3G-1212D-NZ	9-18	±12	±125	1500	±470	80	40 / 75
AM3G-1215D-NZ	9-18	±15	±100	1500	±330	80	40 / 75
AM3G-2405D-NZ*	18-36	±5	±300	1500	±1000	78	40 / 75
AM3G-2409D-NZ	18-36	±9	±167	1500	±680	81	40 / 75
AM3G-2412D-NZ	18-36	±12	±125	1500	±470	83	40 / 75
AM3G-2415D-NZ*	18-36	±15	±100	1500	±330	83	40 / 75
AM3G-4805D-NZ	36-75	±5	±300	1500	±680	80	100 / 150
AM3G-4812D-NZ	36-75	±12	±125	1500	±470	82	40 / 75
AM3G-4815D-NZ	36-75	±15	±100	1500	±330	82	40 / 75
AM3G-0505DH30-NZ	4.5-9	±5	±250	3000	±1000	74	40 / 75
AM3G-0512DH30-NZ	4.5-9	±12	±104	3000	±470	77	40 / 75
AM3G-0515DH30-NZ	4.5-9	±15	±83	3000	±330	77	40 / 75
AM3G-1205DH30-NZ	9-18	±5	±300	3000	±1000	78	40 / 75
AM3G-1212DH30-NZ	9-18	±12	±125	3000	±470	79	40 / 75
AM3G-1215DH30-NZ	9-18	±15	±100	3000	±330	80	40 / 75
AM3G-2405DH30-NZ*	18-36	±5	±300	3000	±1000	79	40 / 75
AM3G-2409DH30-NZ	18-36	±9	±167	3000	±680	81	40 / 75
AM3G-2412DH30-NZ	18-36	±12	±125	3000	±470	83	40 / 75
AM3G-2415DH30-NZ	18-36	±15	±100	3000	±330	83	40 / 75
AM3G-4805DH30-NZ	36-75	±5	±300	3000	±1000	79	40 / 75
AM3G-4812DH30-NZ	36-75	±12	±125	3000	±470	82	40 / 75
AM3G-4815DH30-NZ	36-75	±15	±100	3000	±330	82	40 / 75

Input Specifications

Parameters	Nominal	Typical	Maximum	Units
Voltage range	5 12 24 48	4.5-9 9-18 18-36 36-75		VDC
Filter	Capacitor			
Maximum Rating	5 Vin 12 Vin 24 Vin 48 Vin	12 25 50 100		VDC
Peak Input Voltage time			1	sec
No load input current	5 Vin 12 Vin 24 Vin 48 Vin	60 25 20 5		mA
Input Reflected Ripple Current	5 Vin 12 Vin 24 Vin 48 Vin	20 20 55 55		mA
On/Off Control*	ON – open or Isolated; OFF – high (current 5-10mA)			

*Note: Exceeding 20mA of control current will permanently damage the converter.

Isolation Specifications

Parameters	Conditions	Typical	Rated	Units
Tested I/O voltage	60sec, <1mA		1500, 3000	VDC
Resistance		> 1000		MOhm
Capacitance	100kHz, 1V, 1500VDC models 100kHz, 1V, 3000VDC models	120 50		pF

Output Specifications

Parameters	Conditions	Typical	Maximum	Units
Voltage accuracy	5 to 100% load	±3		%
	5 to 100% load (For models marked with *)	±4		%
No Load Voltage accuracy		±5		
Voltage balance	Dual Output balanced load	±1		%
Short Circuit Protection		Continuous		
Short Circuit Restart		Auto-recovery		
Line voltage regulation	LL~HL	±0.5		%
	LL~HL (For models marked with *)	±1		%
Load voltage regulation	load 5~100%	±0.6		%
Temperature coefficient		±0.02		%/°C
Transient Recovery Time	25% load step	2		msec
Transient Response Deviation	25% load step	±5		%
Ripple & Noise	At 20MHz Bandwidth	See model list		

General Specifications

Parameters	Conditions	Typical	Maximum	Units
Switching frequency	100% load	250		KHz
Operating temperature	With derating above 85°C	-40 to +85		°C
Storage temperature		-55 to +125		°C
Case Temperature		105		°C
Lead Temperature	1.5mm from case for 10 Seconds	300		°C
Cooling		Free air convection		
Humidity			95	%
Case material	Plastic (UL94V-0 rated)			
Weight		4.9		g
Dimensions (L x Wx H)	0.87 x 0.37 x 0.47 inch, 22 x 9.5 x 12 mm			
MTBF	>1 000 000 hrs (MIL-HDBK -217F, Ground Benign, t=+25°C)			

NOTE: All specifications in this datasheet are measured at an ambient temperature of 25°C, humidity<75%, nominal input voltage and at rated output load unless otherwise specified.

Safety Specifications

Parameters	
Standards	Designed to meet UL62368-1(For models marked with # only)
	IEC/EN60950-1 compliant
	EN 55032/CISPR32, Class B, with EMI recommended circuit
	IEC 61000-4-2, Contact ±4KV, Criteria B
	IEC 61000-4-3, 10V/m, Criteria A
	IEC 61000-4-4, ±2KV, Criteria B, with EMS recommended circuit
	IEC 61000-4-5, L-L ±2KV, Criteria B, with EMS recommended circuit
	IEC 61000-4-6, 3Vrms, Criteria A
	IEC 61000-4-29, 0-70%, Criteria B

Pin Out Specifications

Pin	Single	Dual
1	- V Input	- V Input
2	+ V Input	+ V Input
3	On/Off Control	On/Off Control
5	N.C.	N.C.
6	+ V Output	+ V Output
7	- V Output	Common
8	CS	- V Output

Dimensions

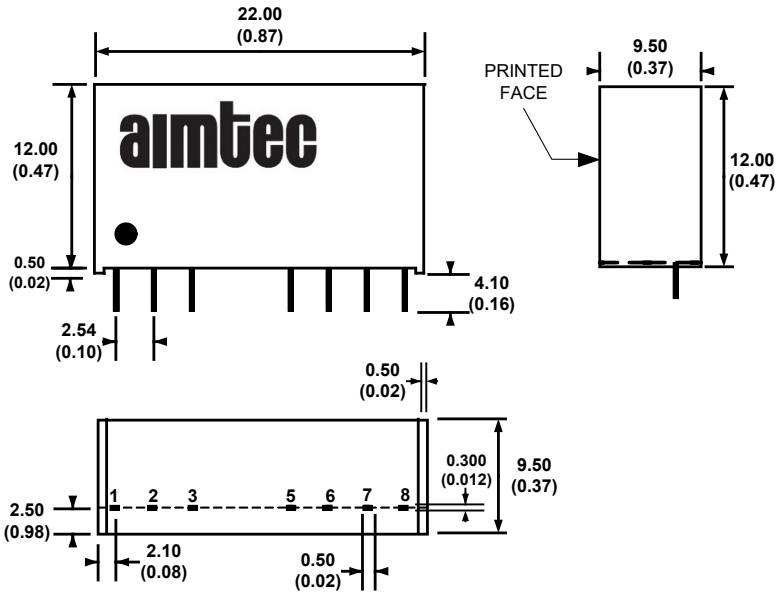

Derating

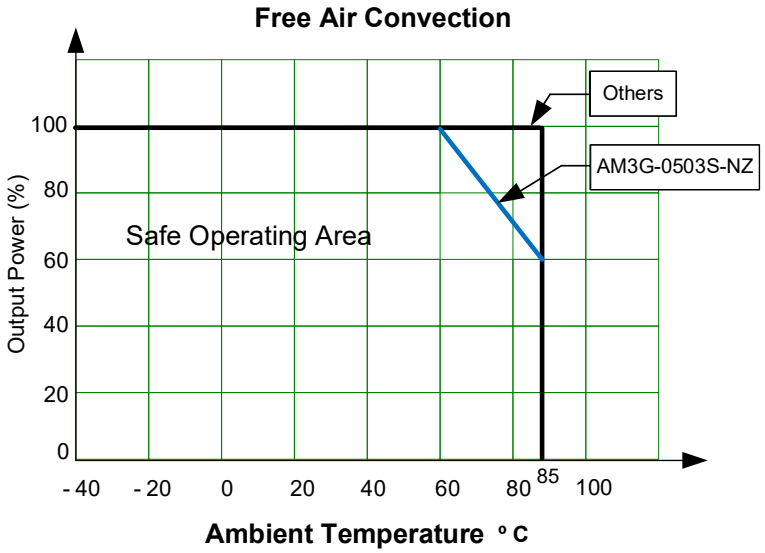

Typical Application Circuits

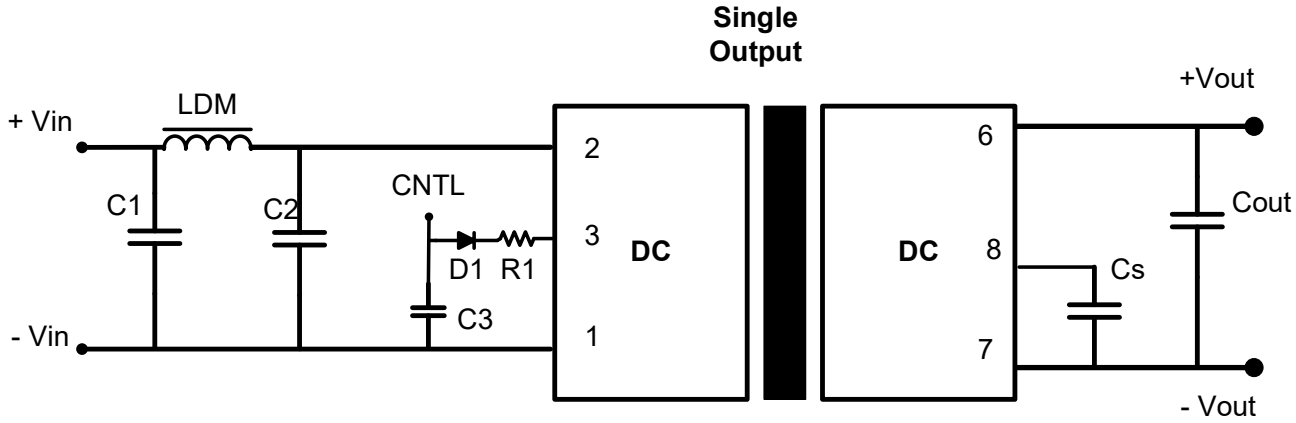

Dual Output

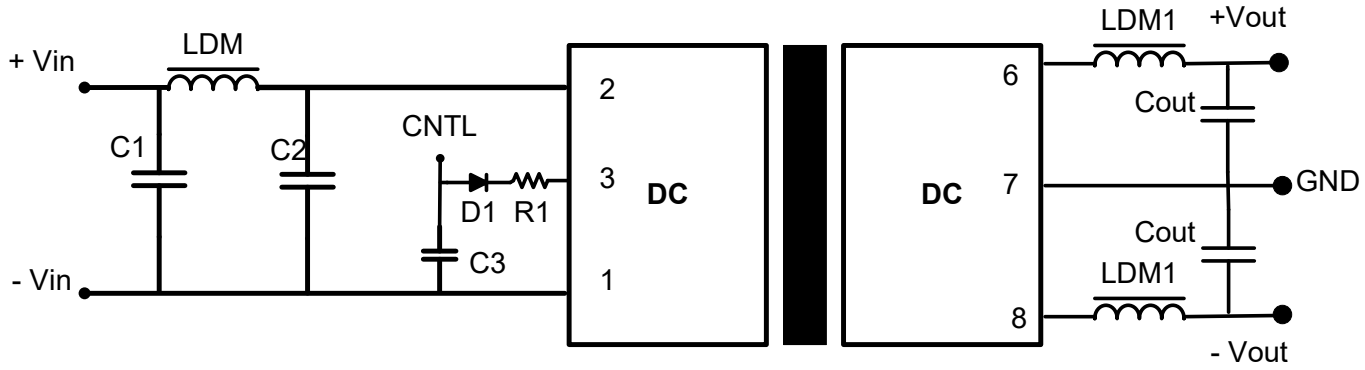

Model	C1	C2	LDM	C3	D1	R1	LDM1	CS	Cout
5 Vin	100µF	47µF	4.7 - 12 µH	47nF / 100V	RB160M-60/1A	See Formula	2.2 - 10 µH	10 - 22µF	100µF
12 Vin	100µF	47µF	4.7 - 12 µH	47nF / 100V	RB160M-60/1A	See Formula	2.2 - 10 µH	10 - 22µF	100µF
24 Vin	10µF	1µF	4.7 - 12 µH	47nF / 100V	RB160M-60/1A	See Formula	2.2 - 10µH	10 - 22µF	100µF
48 Vin	10µF	1µF	4.7 - 12 µH	47nF / 100V	RB160M-60/1A	See Formula	2.2 - 10 µH	10 - 22µF	100µF

- R1 = ((Vcd – Vd1 – 1.0) / Icntl) – 300
- Cs is for ripple & noise reduction, leave it opened if there is no ripple & noise reduction requirement.

EMC Recommended Circuit

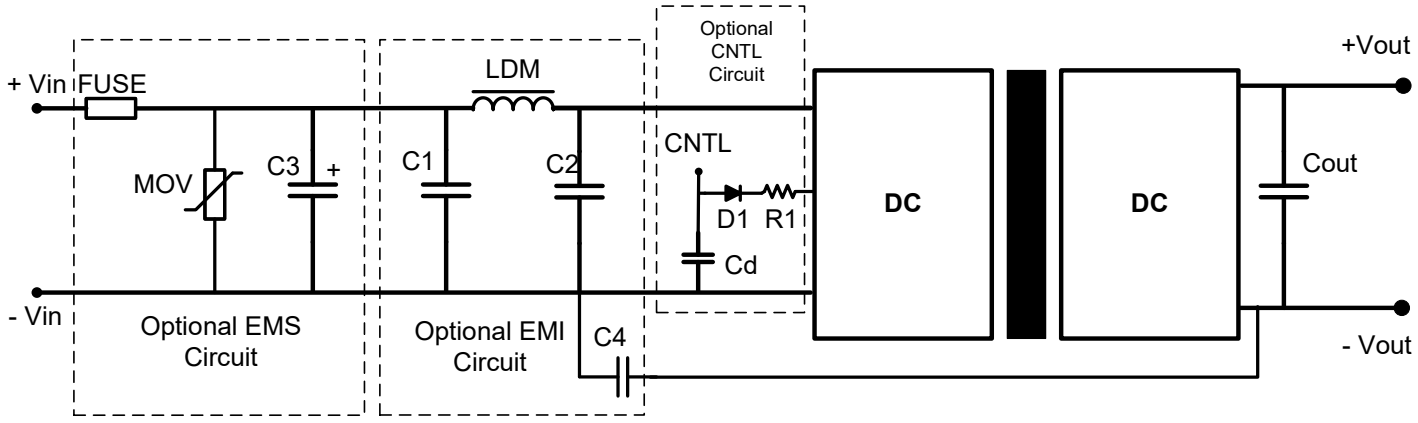

Model	C1, C2	C4	LDM	MOV	TVS	C3	Cd	D1	R1	Cout
5 Vin	4.7µF / 50V	1nF /3KV	12 µH	-	SMCJ13A	680µF / 25V	47nF /100V	RB160M-60V/1A	See Formula	100µF
12 Vin	4.7µF / 50V	1nF /3KV	12 µH	S14K20	SMCJ28A	680µF / 25V	47nF /100V	RB160M-60V/1A	See Formula	100µF
24 Vin	4.7µF / 50V	1nF /3KV	12 µH	S20K30	SMCJ48A	330µF / 50V	47nF /100V	RB160M-60V/1A	See Formula	100µF
48 Vin	4.7µF / 100V	1nF /3KV	12 µH	S14K60	SMCJ90A	330µF / 100V	47nF /100V	RB160M-60V/1A	See Formula	100µF

Note: Fuse is user selectable, slow blow type
R1 = ((Vcd – Vd1 – 1.0) / Icntl) - 300

NOTE: 1. Datasheets are updated as needed and as such, specifications are subject to change without notice. Once printed or downloaded, datasheets are no longer controlled by Aimtec; refer to www.aimtec.com for the most current product specifications. **2.** Product labels shown, including safety agency certifications on labels, may vary based on the date manufactured. **3.** Mechanical drawings and specifications are for reference only. **4.** All specifications are measured at an ambient temperature of 25°C, humidity<75%, nominal input voltage and at rated output load unless otherwise specified. **5.** Aimtec may not have conducted destructive testing or chemical analysis on all internal components and chemicals at the time of publishing this document. CAS numbers and other limited information are considered proprietary and may not be available for release. **6.** This product is not designed for use in critical life support systems, equipment used in hazardous environments, nuclear control systems or other such applications which necessitate specific safety and regulatory standards other the ones listed in this datasheet. **7.** Warranty is in accordance with Aimtec's standard Terms of Sale available at www.aimtec.com.