AM10BRW-Z

Click to ORDER samples



Encapsulated

The AM10BRW-Z is a series of high performance single & dual output DC-DC converters. These converters are built in a copper package in a DIP16 miniature case and providing 4:1 wide input voltage range, stable output voltage in much smaller than standard DIP24 case.

Input voltage ranges are: 9-36VDC & 18-75VDC, output voltages are 3.3, 5, 12, 15, 24, ± 12, ± 15VDC. Featuring new PWM design with no minimum load required & precise 1% output voltage accuracy.

Can be widely used in industrial control, power electronics, instrumentation, medical devices, rail transportation, communications, etc.

Features

- Wide 4:1 Input Range: 9VDC – 75VDC
- Operating Temp: -40 °C to +100 °C
- Low ripple & noise, up to 60mV(p-p) max
- Efficiency up to 87%
- Adjustable output voltage
- Output short circuit, over load protection
- Regulated Output

RoHS

3yr Warranty

Summary

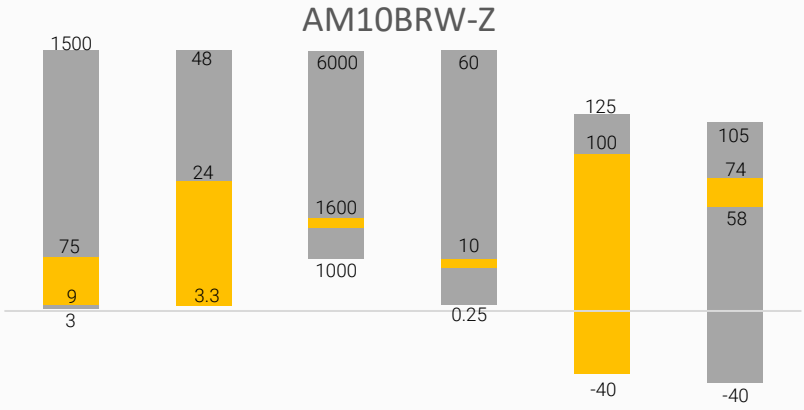

Training

Product Training Video (click to open)

Press Release

Coming Soon!

Application Notes

Applications

Telecom

Industrial

Railway

Instrumentation

Models & Specifications

Single Output

Model	Input Voltage (VDC)	Output Voltage (VDC)	Input Current Max (mA)		Output Current Max (mA)	Maximum Capacitive Load (µF)	Efficiency (%) Full Load
			No Load	Full Load			
AM10BRW-2403SZ	24 (9 ~ 36)	3.3	10	464	2700	3300	80
AM10BRW-2405SZ	24 (9 ~ 36)	5	10	502	2000	2200	83
AM10BRW-2412SZ	24 (9 ~ 36)	12	10	479	833	1000	87
AM10BRW-2415SZ	24 (9 ~ 36)	15	10	479	666	680	87
AM10BRW-2424SZ	24 (9 ~ 36)	24	10	479	416	330	87
AM10BRW-4803SZ	48 (18 ~ 75)	3.3	7	232	2700	3300	80
AM10BRW-4805SZ	48 (18 ~ 75)	5	7	251	2000	2200	83
AM10BRW-4812SZ	48 (18 ~ 75)	12	7	239	833	1000	87
AM10BRW-4815SZ	48 (18 ~ 75)	15	7	239	666	680	87
AM10BRW-4824SZ	48 (18 ~ 75)	24	7	239	416	330	87

Dual Output

Model	Input Voltage (VDC)	Output Voltage (VDC)	Input Current Max (mA)		Output Current Max (mA)	Maximum Capacitive Load (µF)	Efficiency (%) Full Load
			No Load	Full Load			
AM10BRW-2412DZ	24 (9 ~ 36)	± 12	10	478	± 416	± 680	87
AM10BRW-2415DZ	24 (9 ~ 36)	± 15	10	478	± 333	± 470	87
AM10BRW-4812DZ	48 (18 ~ 75)	± 12	7	239	± 416	± 680	87
AM10BRW-4815DZ	48 (18 ~ 75)	± 15	7	239	± 333	± 470	87

Input Specification

Parameters	Conditions		Typical	Maximum	Units
Voltage range	See models table				VDC
Filter	Pi filter				
Absolute maximum rating	100ms	24VDC input models		50	VDC
		48VDC input models		100	VDC
Start up time	Nominal input & constant resistive load		20		ms
Input reflected ripple current*				20	mA pk-pk
Under voltage lock out	Nominal 24V input models		7.0	8.8	VDC
	Nominal 48V input models		16.0	17.8	

* Input reflected ripple current measured with a source inductance of 8.2uH and a source capacitor Cin (47uF,ESR<1.0Ω at 100KHz)

Isolation Specification

Parameters	Conditions	Typical	Maximum	Units
Tested I/O voltage	60 sec	1600		VDC
Tested case to I/O voltage		1000		
Resistance		≧1000		MΩ
Capacitance			1200	pF

Output Specification

Parameters	Conditions		Typical	Maximum	Units
Voltage accuracy				± 1	%
Line regulation	Full load, Single / Dual (Output voltage balance)			± 0.5	%
Load regulation	0 ~ 100% load			± 1	%
Cross regulation (Dual)	One load is 25% - 100%, the other load is 100%			± 5	%
Over load protection			160		%
Short circuit protection	Continuous, Auto recovery				
Voltage adjustment	Single output models only			± 10	%Vout
Temperature coefficient	Full load			± 0.02	%/ °C
Ripple & Noise*	20MHz bandwidth	Output 3.3VDC / 5VDC		60	mV pk-pk
		Others		80	
Transient recovery time	25% load step change		250		µS
Transient response deviation	25% load step change	Output 3.3VDC / 5VDC		±5	%
		Others		±3	

* Ripple and Noise are measured at 20MHz bandwidth by using a 1µF (M/C) and 10µF (E/C) parallel capacitor and typical input with full load

General Specifications

Parameters	Conditions	Typical	Maximum	Units
Switching frequency	100% load	370		KHz
Operating temperature	See derating graph	-40 to +85		°C
Storage temperature		-55 to +125		°C
Maximum case temperature			105	°C
Soldering temperature	1.5mm from case 10 sec max		260	°C
Cooling	Nature Convection (30~65 LFM)			
Humidity	Non-condensing		95	% RH
Case material	Copper			
Base material	Non-Conductive Black Plastic (UL94V-0)			
Potting material	Epoxy (UL94V-0)			
Pin material	Φ0.5mm brass solder-coated			
Weight	10			g
Dimensions (L x W x H)	0.94 x 0.54 x 0.41 inches, 23.80 x 13.70 x 10.40mm			
MTBF	> 485 000 hrs (MIL-HDBK -217F, t=+25°C) / Full Load			

Safety Specifications

Parameters		
Agency Approval	cULus	UL 62368-1
Standards	Information technology Equipment	Designed to meet IEC/EN 62368-1
	EMC - Conducted and radiated emission	EN55032, CLASS A
	Electrostatic Discharge Immunity	IEC 61000-4-2 , Criteria A
	RF, Electromagnetic Field Immunity	IEC 61000-4-3 , Criteria A
	Electrical Fast Transient/Burst Immunity	IEC 61000-4-4 , Criteria A with recommended circuit
	Surge Immunity	IEC 61000-4-5 , Criteria A with recommended circuit
	RF, Conducted Disturbance Immunity	IEC 61000-4-6 , Criteria A
	PFMF	IEC 61000-4-8 , Criteria A

Derating

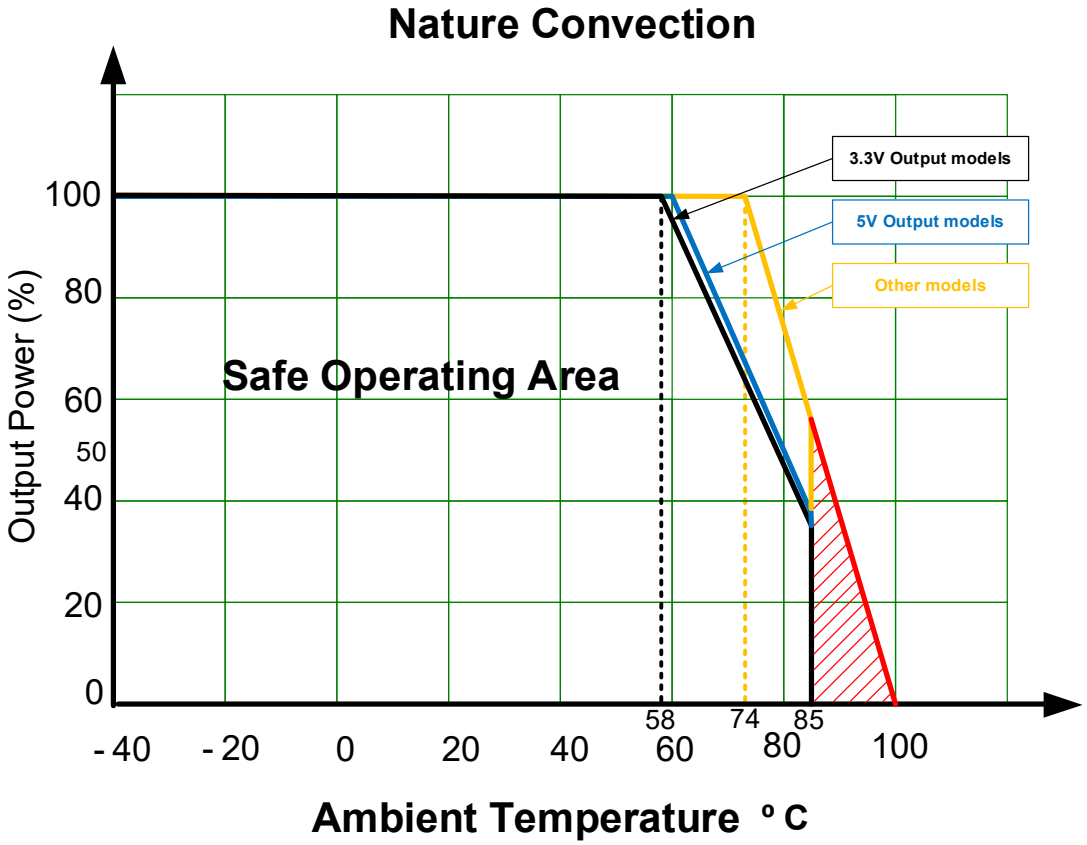

Input Reflected Ripple Current

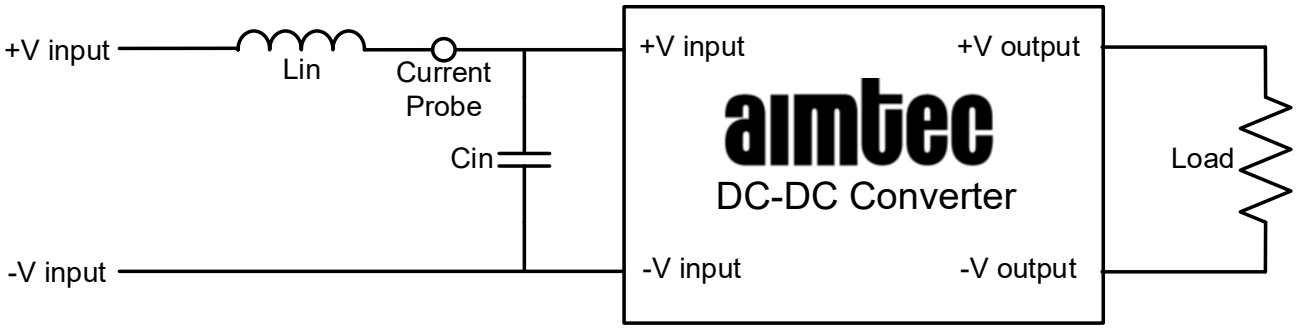

Lin : 8.2uH / Cin : 47uF,ESR<1.0Ω at 100KHz

EFT & Surge Recommended Circuit

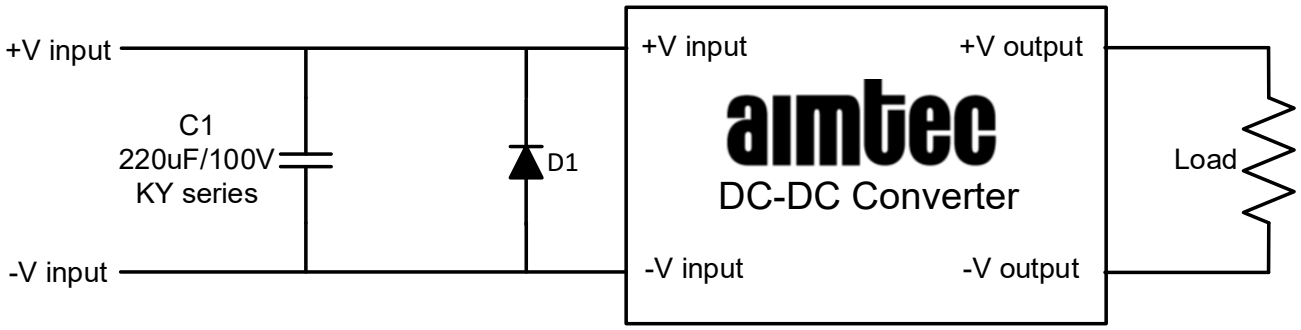

	D1
AM10BW-24XX	TVS, 58V, 3KV
AM10BW-48XX	TVS, 120V, 3KV

Output voltage adjustment

Single output models only

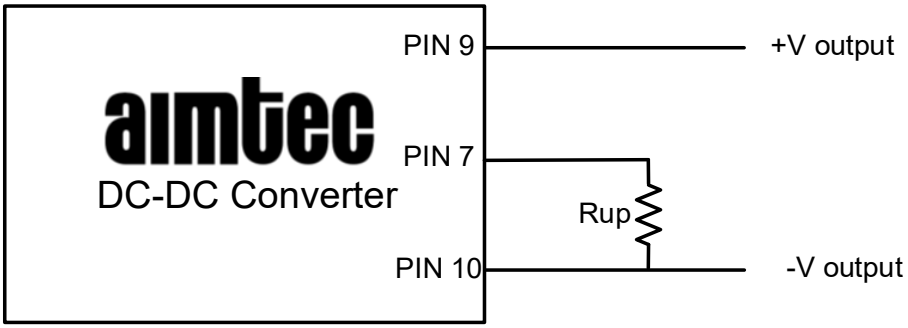

Pin 7 via a resistor to Pin 10(-Vout),Vo trim up.

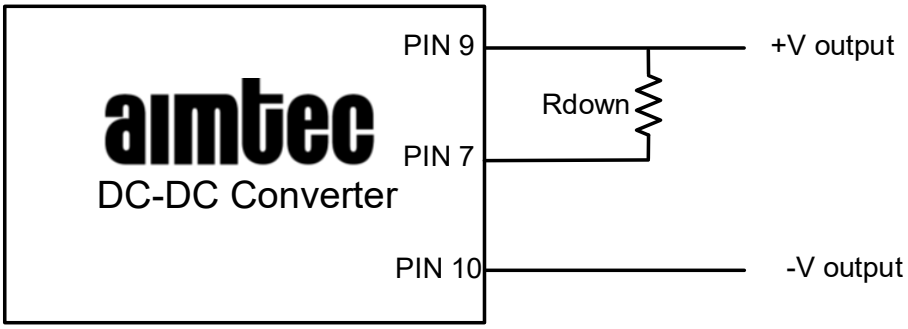

Pin 7 via a resistor to Pin 9(+Vout),Vo trim down.

Leave open if not used.

AM10BRW-xx03SZ

Trim down %	1	2	3	4	5	6	7	8	9	10
Vout (VDC)	3.267	3.234	3.201	3.168	3.135	3.102	3.069	3.036	3.003	2.970
Rdown (KΩ)	194.272	116.366	80.177	59.274	45.660	36.090	28.993	23.522	19.174	15.637
Trim up %	1	2	3	4	5	6	7	8	9	10
Vout (VDC)	3.333	3.366	3.399	3.432	3.465	3.498	3.531	3.564	3.597	3.630
Rup (KΩ)	1177.917	237.264	127.213	84.575	61.931	47.889	38.330	31.402	26.151	22.033

AM10BRW-xx05SZ

Trim down %	1	2	3	4	5	6	7	8	9	10
Vout (VDC)	4.950	4.900	4.850	4.800	4.750	4.700	4.650	4.600	4.550	4.500
Rdown (KΩ)	217.230	101.792	63.323	44.090	32.551	24.859	19.364	15.244	12.039	9.475
Trim up %	1	2	3	4	5	6	7	8	9	10
Vout (VDC)	5.050	5.100	5.150	5.200	5.250	5.300	5.350	5.400	5.450	5.500
Rup (KΩ)	442.280	217.785	142.933	105.504	83.045	68.072	57.376	49.355	43.116	38.124

AM10BRW-xx12SZ

Trim down %	1	2	3	4	5	6	7	8	9	10
Vout (VDC)	11.880	11.760	11.640	11.520	11.400	11.280	11.160	11.040	10.920	10.800
Rdown (KΩ)	1811.641	759.063	458.326	315.872	232.773	178.330	139.899	111.322	89.240	71.665
Trim up %	1	2	3	4	5	6	7	8	9	10
Vout (VDC)	12.120	12.240	12.360	12.480	12.600	12.720	12.840	12.960	13.080	13.200
Rup (KΩ)	926.406	479.858	312.402	224.688	170.709	134.143	107.734	87.767	72.140	59.577

AM10BRW-xx15SZ

Trim down %	1	2	3	4	5	6	7	8	9	10
Vout (VDC)	14.850	14.700	14.550	14.400	14.250	14.100	13.950	13.800	13.650	13.500
Rdown (KΩ)	1765.430	738.524	445.123	306.143	225.072	171.956	134.462	106.583	85.039	67.892
Trim up %	1	2	3	4	5	6	7	8	9	10
Vout (VDC)	15.150	15.300	15.450	15.600	15.750	15.900	16.050	16.200	16.350	16.500
Rup (KΩ)	957.213	496.662	323.955	233.490	177.818	140.106	112.869	92.275	76.158	63.202

AM10BRW-xx24SZ

Trim down %	1	2	3	4	5	6	7	8	9	10
Vout (VDC)	23.760	23.520	23.280	23.040	22.800	22.560	22.320	22.080	21.840	21.600
Rdown (KΩ)	1190.694	532.021	325.189	224.004	163.989	124.265	96.029	74.928	58.560	45.494
Trim up %	1	2	3	4	5	6	7	8	9	10
Vout (VDC)	24.240	24.480	24.720	24.960	25.200	25.440	25.680	25.920	26.160	26.400
Rup (KΩ)	726.524	353.520	222.373	155.444	114.841	87.585	68.023	53.301	41.819	32.615

Dimensions

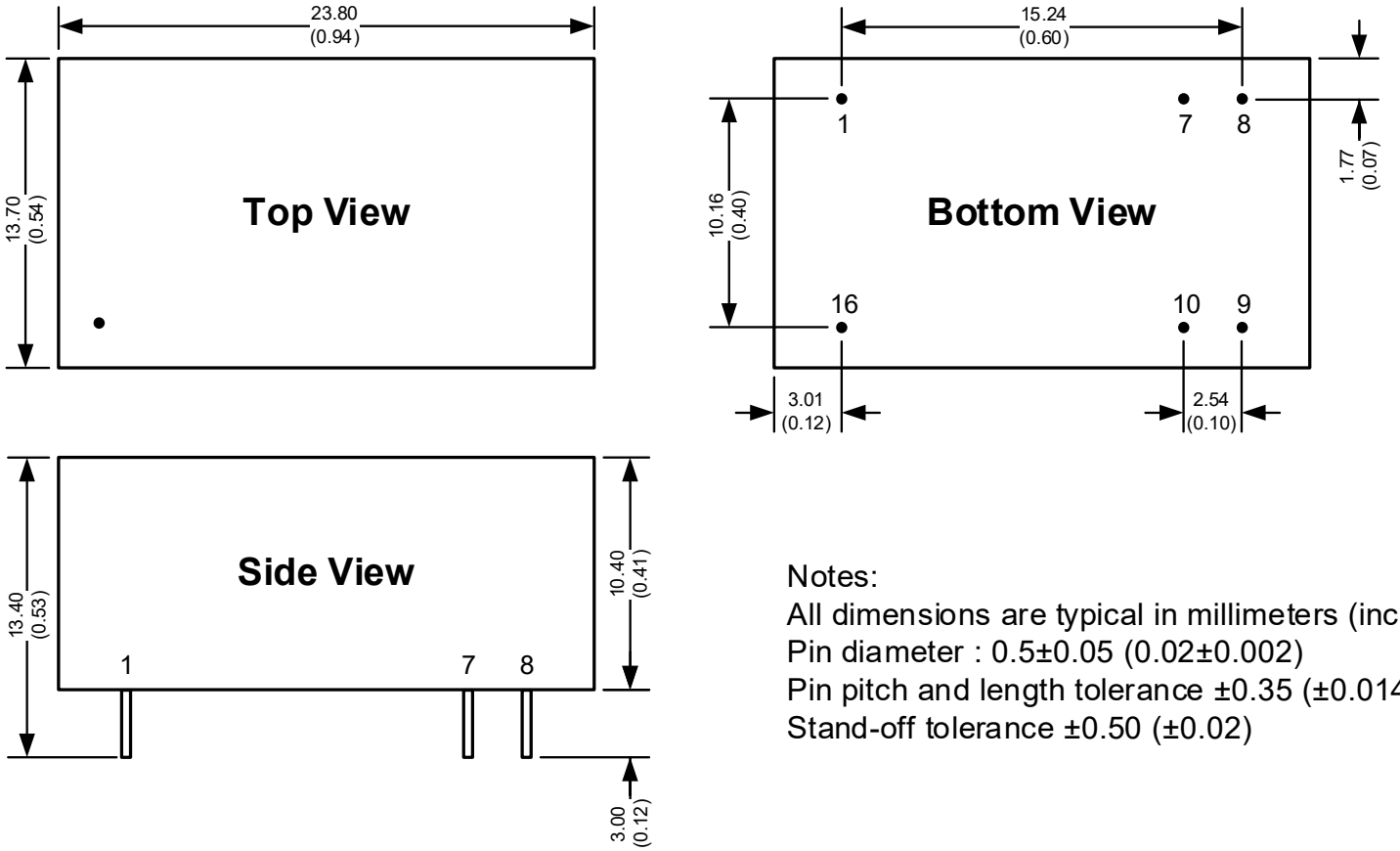

Notes:
All dimensions are typical in millimeters (inches).
Pin diameter : 0.5±0.05 (0.02±0.002)
Pin pitch and length tolerance ±0.35 (±0.014)
Stand-off tolerance ±0.50 (±0.02)

Pin Out Specifications		
Pin	Single	Dual
1	-V Input	-V Input
7	Trim	NC
8	NC	Common
9	+V Output	+V Output
10	-V Output	-V Output
16	+V Input	+V Input

NOTE: 1. Datasheets are updated as needed and as such, specifications are subject to change without notice. Once printed or downloaded, datasheets are no longer controlled by Aimtec; refer to www.aimtec.com for the most current product specifications. **2.** Product labels shown, including safety agency certifications on labels, may vary based on the date manufactured. **3.** Mechanical drawings and specifications are for reference only. **4.** All specifications are measured at an ambient temperature of 25°C, humidity<75%, nominal input voltage and at rated output load unless otherwise specified. **5.** Aimtec may not have conducted destructive testing or chemical analysis on all internal components and chemicals at the time of publishing this document. CAS numbers and other limited information are considered proprietary and may not be available for release. **6.** This product is not designed for use in critical life support systems, equipment used in hazardous environments, nuclear control systems or other such applications which necessitate specific safety and regulatory standards other the ones listed in this datasheet. **7.** Warranty is in accordance with Aimtec's standard Terms of Sale available at www.aimtec.com.