Click to ORDER samples

AM10GH-EZ

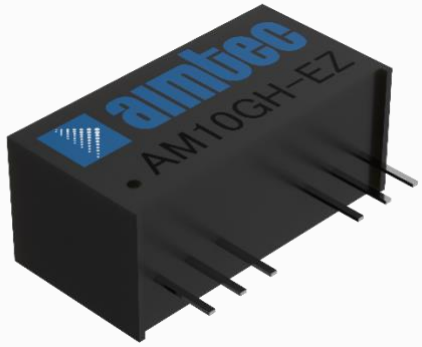

SIP8 Package

The AM10GH-EZ is a 10W SIP8 DC/DC converter that offers great cost savings thanks to an improved manufacturing process. It also features excellent reliability and performance while offering a standard input voltage range of 9-75VDC as well as an output voltage of -15 to 24V. This compact SIP8 design will surely benefit your new system design.

This new series offers great operating temperatures, from -40 to 75°C with full power up to 50°C. Also, an isolation of 1600VDC for improved reliability and system safety as well as a great 2,696,000h MTBF come standard.

The AM10GH-EZ is suitable for many applications such as industrial systems, portable equipment, and internet of things.

Features

- Continuous Short circuit protection
- Operating Temp: -40 °C to +75 °C
- Industry standard SIP8 pin-out
- Efficiency up to 89%
- Regulated output
- Made in Taiwan

RoHS

3yr Warranty

Summary

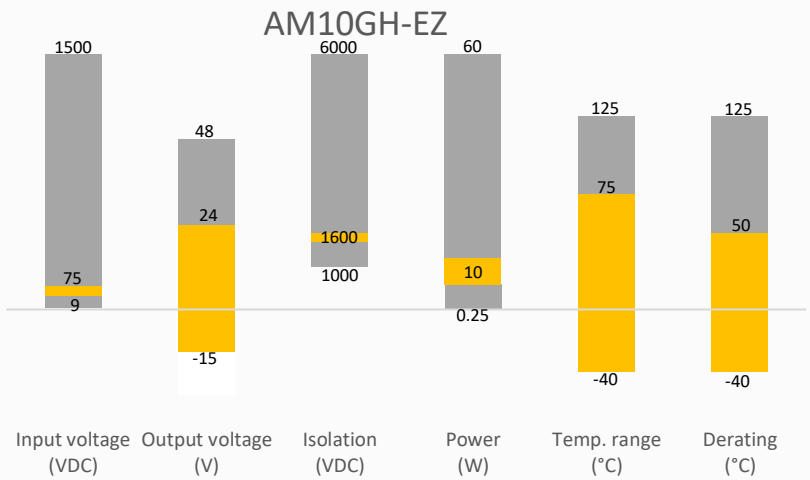

Training

Product Training Video (click to open)

Press Release

Coming Soon!

Application Notes

Applications

Industrial

Portable Equipment

IoT

Models & Specifications

Single Output

Model	Input Voltage (VDC)	Input Current No Load/Full Load (mA TYP)		Output Voltage (VDC)	Output Current max (mA)*	Isolation (VAC/VDC)	Efficiency Typ. (%)
AM10GH-2403SEZ	24 (9-36)	7	335	3.3	2000	1600	82
AM10GH-2405SEZ	24 (9-36)	7	392	5	1600	1600	85
AM10GH-2412SEZ	24 (9-36)	7	426	12	750	1600	88
AM10GH-2415SEZ	24 (9-36)	7	426	15	600	1600	88
AM10GH-2424SEZ	24 (9-36)	7	421	24	375	1600	89
AM10GH-4803SEZ	48 (18-72)	7	168	3.3	2000	1600	82
AM10GH-4805SEZ	48 (18-72)	7	196	5	1600	1600	85
AM10GH-4812SEZ	48 (18-72)	7	213	12	750	1600	88
AM10GH-4815SEZ	48 (18-72)	7	213	15	600	1600	88
AM10GH-4824SEZ	48 (18-72)	7	211	24	375	1600	89

Dual Output

Model	Input Voltage (VDC)	Input Current No Load/Full Load (mA TYP)		Output Voltage (VDC)	Output Current max (mA)*	Isolation (VDC)	Efficiency Typ. (%)
AM10GH-2405DEZ	24 (9-36)	7	388	±5	±800	1600	86
AM10GH-2412DEZ	24 (9-36)	7	426	±12	±375	1600	88
AM10GH-2415DEZ	24 (9-36)	7	426	±15	±300	1600	88
AM10GH-4805DEZ	48 (18-72)	7	196	±5	±800	1600	85
AM10GH-4812DEZ	48 (18-72)	7	213	±12	±375	1600	88
AM10GH-4815DEZ	48 (18-72)	7	216	±15	±300	1600	87

Input Specification

Parameters	Conditions	Typical	Maximum	Units
Filter	Capacitor			
Voltage Tolerance	Vo, Io Nom		4:1	

Isolation Specification

Parameters	Conditions	Typical	Maximum	Units
Tested I/O voltage	60 sec, leakage ≤ 1mA	1600		VDC
Resistance	500VDC	>1000		MΩ

Output Specification

Parameters	Conditions	Typical	Maximum	Units
Voltage Tolerance	100% Full Load		±2	%
Line Regulation	Regulated		±0.5	%
Load regulation	Single output models		±0.5	
	Dual output models (Balanced Load)		±1.0	%
Ripple & Noise*	3.3V, 5V output models		100	mV p-p
	12V output model		120	mV p-p

	15V output model		150	mV p-p
	24V output model		240	mV p-p
* Ripple and Noise are measured at 20MHz bandwidth. Please refer to the application note for specific details.				

General Specifications				
Parameters	**Conditions**	**Typical**	**Maximum**	**Units**
Switching frequency	Single	400		KHz
	Dual	500		KHz
Short circuit protection	Continuous, Auto-Recovery			
Operating temperature	With Derating	-40 to +75		°C
Storage temperature		-55 to +125		°C
Cooling	Natural convection (20LFM)			
Humidity	Non-condensing	>5	95	% RH
Case material	Plastic			
Weight		4.8		g
Dimensions (L x W x H)	0.86 x 0.36 x 0.44 inches (21.80 x 9.20 x 11.10 mm)			
MTBF	2 696 000 hrs (MIL-HDBK -217F, t=+25°C) / Full Load			
NOTE: All specifications in this datasheet are measured at an ambient temperature of 25°C, humidity<75%, nominal input voltage and at rated output load unless otherwise specified.				

Derating

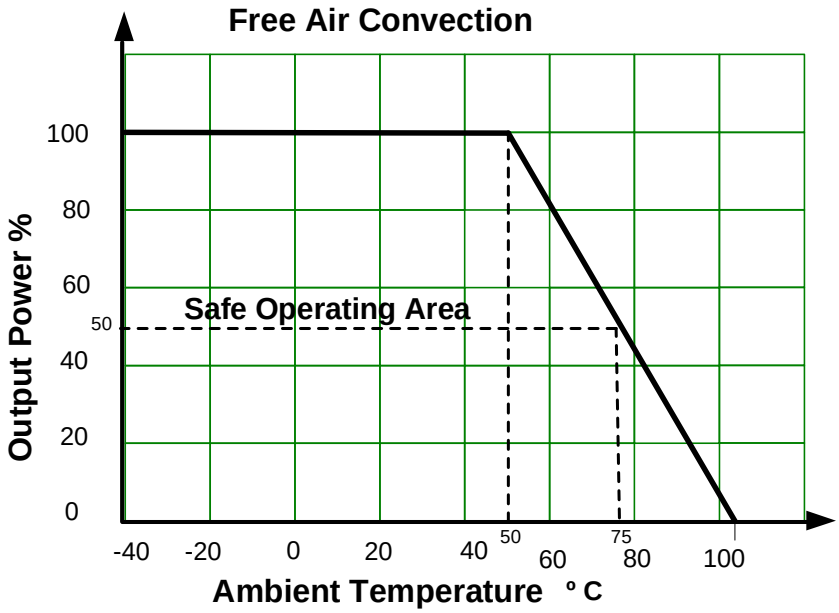

Typical application circuit

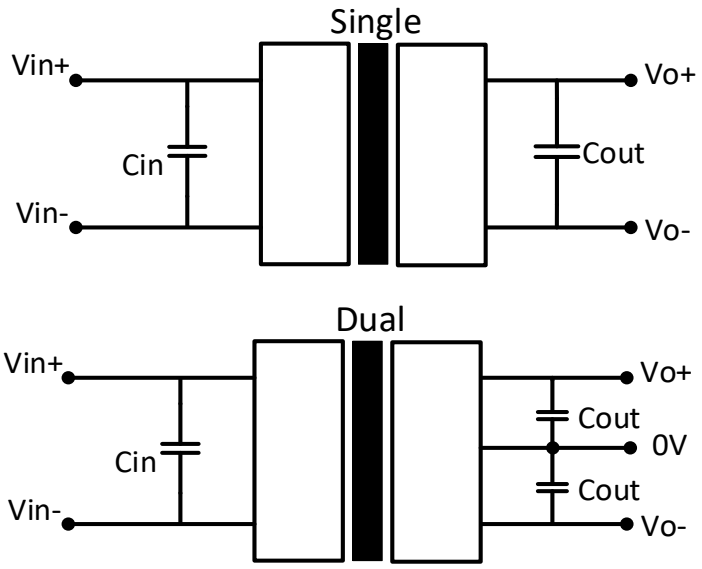

Vin	Cin
24VDC	10µF/100V
48VDC	10µF/100V

Single Vout	Cout
3.3VDC	100µF/25V
5VDC	100µF/25V
12VDC	100µF/25V
15VDC	100µF/25V
24VDC	100µF/25V

Dual Vout	Cout
±5VDC	100µF/25V
±12VDC	100µF/25V
±15VDC	100µF/25V

Table 1

Dimensions

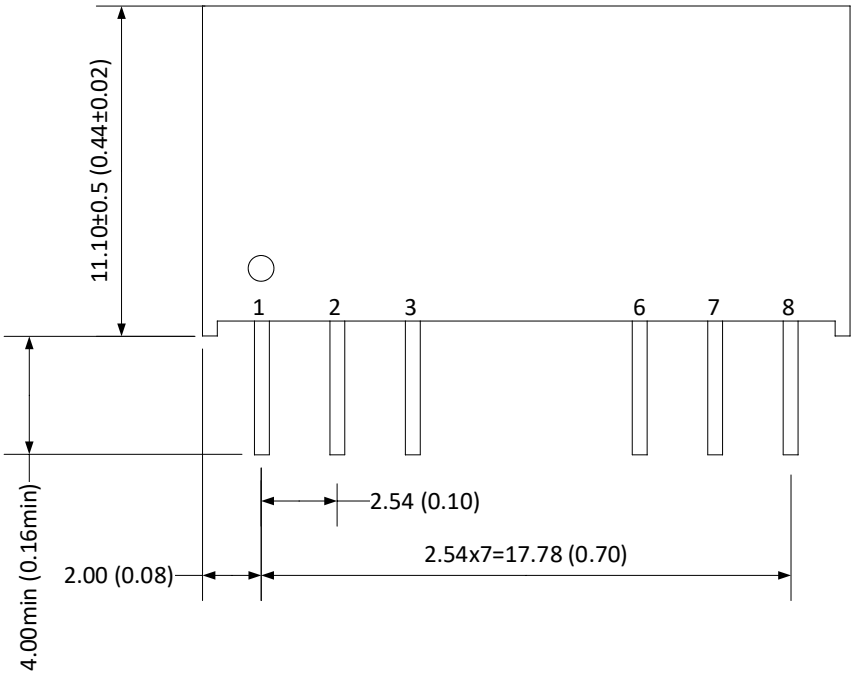

Pin Out Specifications		
Pin	Single output	Dual output
1	-V Input	-V Input
2	+V Input	+V Input
3	Remote ON/OFF	Remote ON/OFF
6	+V Output	+V Output
7	-V Output	Common
8	NC	-V Output

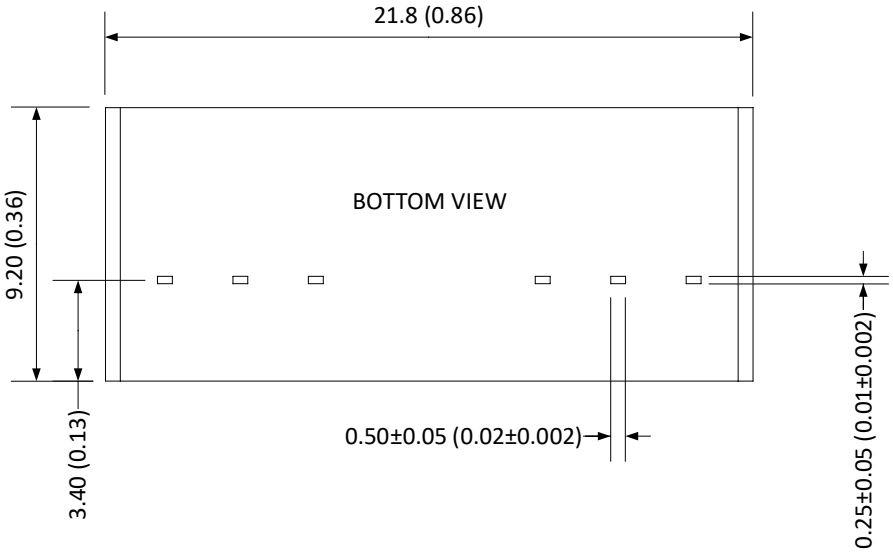

UNIT: mm (inch) tolerances are XX.X±0.5, XX.XX±0.25

NOTE: 1. Datasheets are updated as needed and as such, specifications are subject to change without notice. Once printed or downloaded, datasheets are no longer controlled by Aimtec; refer to www.aimtec.com for the most current product specifications. **2.** Product labels shown, including safety agency certifications on labels, may vary based on the date manufactured. **3.** Mechanical drawings and specifications are for reference only. **4.** All specifications are measured at an ambient temperature of 25°C, humidity<75%, nominal input voltage and at rated output load unless otherwise specified. **5.** Aimtec may not have conducted destructive testing or chemical analysis on all internal components and chemicals at the time of publishing this document. CAS numbers and other limited information are considered proprietary and may not be available for release. **6.** This product is not designed for use in critical life support systems, equipment used in hazardous environments, nuclear control systems or other such applications which necessitate specific safety and regulatory standards other the ones listed in this datasheet. **7.** Warranty is in accordance with Aimtec's standard Terms of Sale available at www.aimtec.com.