Click to ORDER samples

AM10TW-LPZ



Encapsulated

The AM10TW-LPZ is a 10W DC/DC converter that offers a regulated output which contributes to a more stable and reliable output performance. It features a wide 4:1 input voltage range of 9-75VDC, which will benefit your new system design.

This series offers great operating temperatures, from -40°C to 85°C. Furthermore, an isolation of 1500VDC, a high MTBF of 1,000,000h, continuous output short circuit protection (OSCP), over-current protection (OCP), over-voltage protection (OVP), and under voltage lock-out (UVLO) come standard with the series.

The AM10TW-LPZ is suitable for distributed power supply systems, industrial controls, power grid, instruments and communications applications.

Features

- Operating Temp: -40 °C to +85 °C
- High isolation voltage: 1500VDC
- Low ripple & noise, 40mV (p-p), typ.
- Regulated Output
- Output short circuit, over-current, over-voltage, input under voltage protection

RoHS

3 yr Warranty

Summary

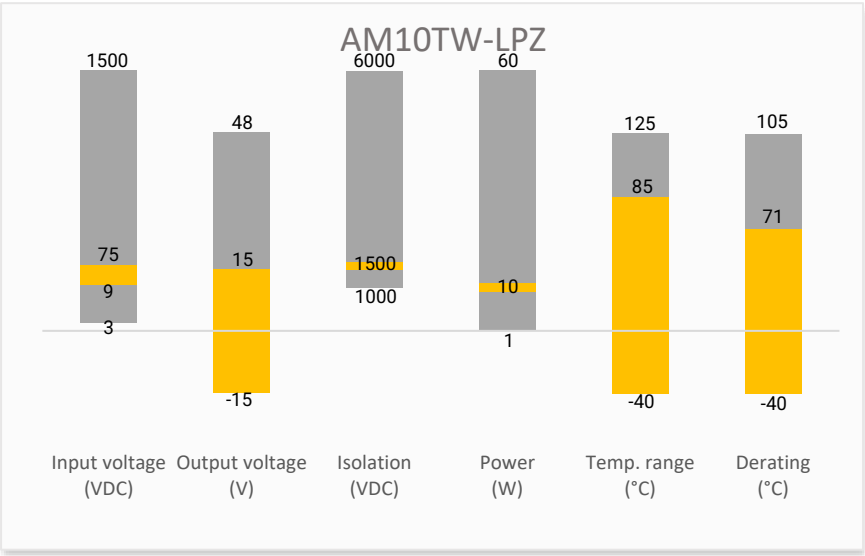

Training

Product Training Video (click to open)

Press Release

Coming Soon!

Application Notes

Applications

Power Grid

Industrial

Telecom

Instrumentation

Models & Specifications

Single Output

Model	Input Voltage (VDC)	Output Voltage (VDC)	Input Current (mA TYP.)		Output Current Max (mA)	Maximum Capacitive Load (µF)	Efficiency Full Load Typ. (%)
			No Load	Full Load			
AM10TW-2403SLPZ	24 (9-36)	3.3	12	380	2400	1200	86
AM10TW-2405SLPZ	24 (9-36)	5	6	474	2000	1000	87
AM10TW-2412SLPZ	24 (9-36)	12	5	502	833	470	87
AM10TW-2415SLPZ	24 (9-36)	15	5	502	667	330	87
AM10TW-2424SLPZ	24 (9-36)	24	5	502	416	100	88
AM10TW-4803SLPZ	48 (18-75)	3.3	5	192	2400	1200	85
AM10TW-4805SLPZ	48 (18-75)	5	6	240	2000	1000	86
AM10TW-4812SLPZ	48 (18-75)	12	4	251	833	470	87
AM10TW-4815SLPZ	48 (18-75)	15	4	251	667	330	87
AM10TW-4824SLPZ	48 (18-75)	24	4	251	416	100	88

Dual Output

Model	Input Voltage (VDC)	Output Voltage (VDC)	Input Current Max (mA TYP.)		Output Current Max (mA)	Maximum Capacitive Load (µF)	Efficiency (%) Full Load Typ.
			No Load	Full Load			
AM10TW-2405DLPZ	24 (9-36)	±5	6	474	±1000	1000	83
AM10TW-2412DLPZ	24 (9-36)	±12	6	502	±416	470	87
AM10TW-2415DLPZ	24 (9-36)	±15	6	502	±333	330	87
AM10TW-4805DLPZ	48 (18-75)	±5	6	240	±1000	1000	83
AM10TW-4812DLPZ	48 (18-75)	±12	6	251	±416	470	87
AM10TW-4815DLPZ	48 (18-75)	±15	6	251	±333	330	87

Input Specification

Parameters	Conditions	Typical	Maximum	Units
Voltage Types			4:1	
Filter	Capacitor			
Startup input voltage	24Vin models		9	VDC
	48Vin models		18	VDC
Input under-voltage lockout	24Vin models	≥5.5	6.5	VDC
	48Vin models	≥12	15.5	VDC
Absolute maximum rating	24Vin models, 1 sec.	≥-0.7	50	VDC
	48Vin models, 1 sec.	≥-0.7	100	VDC
Input reflected current		30		mA
On/Off control	ON - open or pulled high (3.5- 12 VDC) OFF - pulled low to GND (0 – 0.7 VDC), idle current 10mA max.			

Isolation Specification

Parameters	Conditions	Typical	Maximum	Units
Tested isolation voltage	Input / output 60 sec, ≤ 1mA	1500		VDC
Resistance	500VDC	≥1000		MΩ
Capacitance	Input to output, 100KHz/0.1V	2000		pF

Output Specification

Parameters	Conditions	Typical	Maximum	Units
Voltage Tolerance	Full load @Vin (nom.)	±1	±3	%
Output voltage balance	Dual output with balanced load	±0.5	±1.5	%
Line regulation	Positive output, Full load	±0.2	±0.5	%
	Negative output, Full load	±0.5	±1	%
Load regulation	Positive output, 5~100% load	±0.5	±1	%
	Negative output, 5~100% load	±0.5	±1.5	%
Transient recovery time	25% load step change	300	500	µs
Transient recovery deviation	25% load step change, 3.3/5/±5Vout models	±5	±8	%
	25% load step change, others	±3	±5	%
Ripple & Noise	20MHz bandwidth	40	85	mV pk-pk

General Specifications

Parameters	Conditions	Minimum	Typical	Maximum	Units
Switching frequency	100% load		300		KHz
Over Current protection	Input voltage range	110	140		%Io
Over voltage protection	Output voltage range	110		160	%Vo
Short Circuit Protection	Continuous, Auto recovery				
Operating temperature	With derating	-40		85	°C
Storage temperature		-55		125	°C
Temperature coefficient	100% Load			± 0.03	%/ °C
Cooling	Free air convection				
Humidity	Non-condensing	5		95	% RH
Maximum soldering temperature	1.5mm from case for 10 sec			+300	°C
Case material	Aluminum alloy				
Weight			14		g
Dimensions (L x W x H)	1.26 x 0.79 x 0.44 inches (32.00 × 20.00 × 11.10 mm)				
MTBF	> 1 000 000 hrs (MIL-HDBK -217F, t=+25°C)				

NOTE: All specifications in this datasheet are measured at an ambient temperature of 25°C, humidity<75%, nominal input voltage and at rated output load unless otherwise specified.

Safety Specifications

Parameters		
Standards	Designed to meet UL/EN/IEC62368-1	
	EMI - Conducted and radiated emission	CISPR32/EN55032, Class B (with the recommended EMC circuit part B)
	Electrostatic Discharge Immunity	IEC/EN 61000-4-2, Contact ±4KV, Criteria B
	RF, Electromagnetic Field Immunity	IEC/EN 61000-4-3, 10V/m, Criteria A
	Electrical Fast Transient/Burst Immunity	IEC/EN 61000-4-4, ±2KV, Criteria B (with the recommended EMC circuit part A)
	Surge Immunity	IEC/EN 61000-4-5, ±2KV, Criteria B (with the recommended EMC circuit part A)
	RF, Conducted Disturbance Immunity	IEC/EN 61000-4-6, 10Vrms, Criteria A
	Vibration	IEC/EN61373, category 1/grade B

Derating

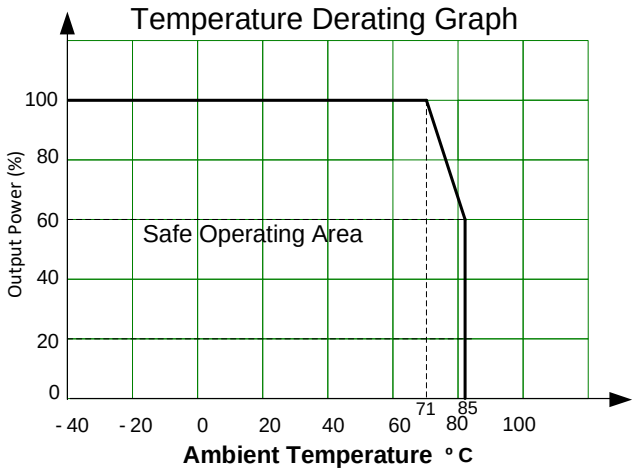

Typical Application Circuit

Single output models

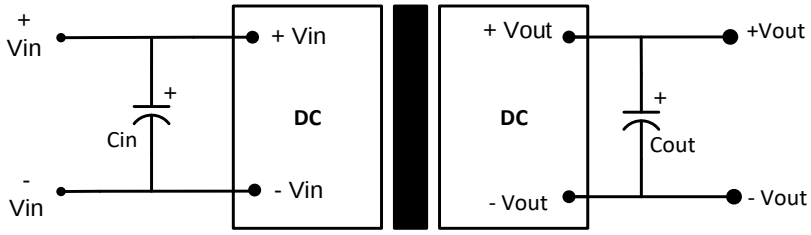

Single Output Models			
Vin	Cin	Vout	Cout
24VDC	100µF/50V	3.3VDC	10µF/50V
48VDC	10-47µF/100V	5VDC	
		12VDC	
		15VDC	
		24VDC	

Dual output models

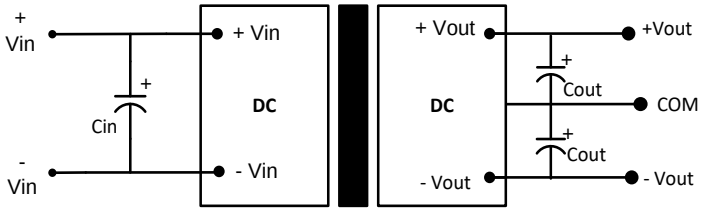

Dual Output Models			
Vin	Cin	Vout	Cout
24VDC	100µF/50V	±5VDC	10µF/50V
48VDC	10-47µF/100V	±12VDC	
		±15VDC	

EMC Application Circuit

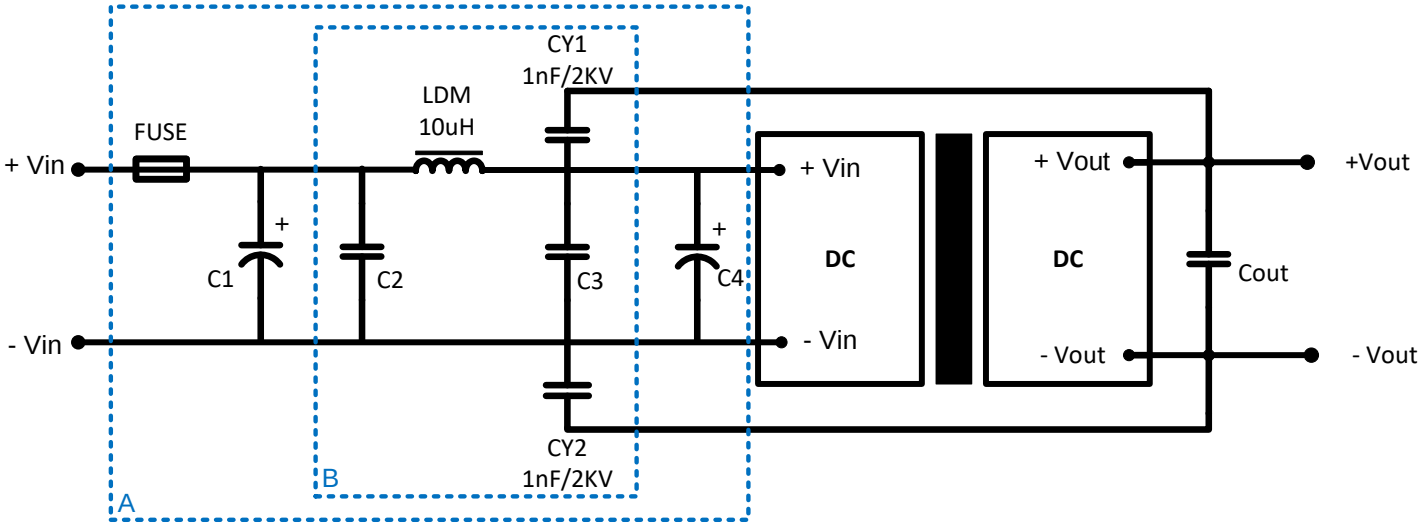

Model	24Vin	48Vin
C1/C4	330µF/50V	330µF/100V
C2/C3	10µF/50V	10µF/100V
Cout	Refer to typical application circuit	
Fuse	Chose based on actual current	

Dimensions

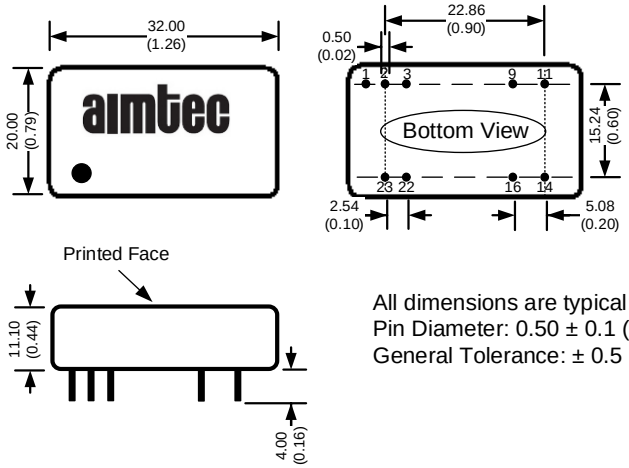

All dimensions are typical: millimeters (inches)
Pin Diameter: 0.50 ± 0.1 (0.02 ± 0.004)
General Tolerance: ± 0.5 (±0.02)

Pin Out Specifications		
Pin	Single	Dual
1	Remote On/Off	Remote On/Off
2	-V Input	-V Input
3	-V Input	-V Input
9	No Pin	Common
11	N.C.	-V Output
14	+V Output	+V Output
16	-V Output	Common
22	+V Input	+V Input
23	+V Input	+V Input

NOTE: 1. Datasheets are updated as needed and as such, specifications are subject to change without notice. Once printed or downloaded, datasheets are no longer controlled by Aimtec; refer to www.aimtec.com for the most current product specifications. **2.** Product labels shown, including safety agency certifications on labels, may vary based on the date manufactured. **3.** Mechanical drawings and specifications are for reference only. **4.** All specifications are measured at an ambient temperature of 25°C, humidity<75%, nominal input voltage and at rated output load unless otherwise specified. **5.** Aimtec may not have conducted destructive testing or chemical analysis on all internal components and chemicals at the time of publishing this document. CAS numbers and other limited information are considered proprietary and may not be available for release. **6.** This product is not designed for use in critical life support systems, equipment used in hazardous environments, nuclear control systems or other such applications which necessitate specific safety and regulatory standards other the ones listed in this datasheet. **7.** Warranty is in accordance with Aimtec's standard Terms of Sale available at www.aimtec.com.