aimtec
Your Power Partner

Series AM12TW-Z

12 Watt | DC-DC Converter



FEATURES:

- Ultra Wide Input Range 4:1
- 1600 VDC Isolation
- Efficiency up to 90%
- Soft Start
- Remote On/Off Function
- No Minimum Load Required
- -40ºC to +85ºC Operating Temperature Range
- Short Circuit & Over Voltage Protection
- DIP 24 Package
- Low No Load Input Current

RoHS CE

Models
Single output

Model	Input Voltage (V)	Output Voltage (V)	Output Current max (mA)	Isolation (VDC)	Maximum Capacitive load (µF)	Efficiency (%)
AM12TW-2403SZ	9-36	3.3	3500	1600	2000	87
AM12TW-2405SZ	9-36	5.1	2400	1600	2000	89
AM12TW-2412SZ	9-36	12	1000	1600	430	90
AM12TW-2415SZ	9-36	15	800	1600	300	90
AM12TW-4803SZ	18-75	3.3	3500	1600	2000	87
AM12TW-4805SZ	18-75	5.1	2400	1600	2000	89
AM12TW-4812SZ	18-75	12	1000	1600	430	90
AM12TW-4815SZ	18-75	15	800	1600	300	90

Models
Dual output

Model	Input Voltage (V)	Output Voltage (V)	Output Current max (mA)	Isolation (VDC)	Maximum Capacitive load (µF)	Efficiency (%)
AM12TW-2405DZ	9-36	±5	±1200	1600	±1250	87
AM12TW-2412DZ	9-36	±12	±500	1600	±200	90
AM12TW-2415DZ	9-36	±15	±400	1600	±120	90
AM12TW-4805DZ	18-75	±5	±1200	1600	±1250	87
AM12TW-4812DZ	18-75	±12	±500	1600	±200	90
AM12TW-4815DZ	18-75	±15	±400	1600	±120	90

Input Specifications

Parameters	Nominal	Typical	Maximum	Units
Voltage range	24 48	9-36 18-75		VDC
Filter	π (Pi) Network			
Turn on Transient process time		250		µs
Transient response deviation			±3	%
Start up time	Nominal Vin and constant resistive load	20		ms
Absolute Maximum Rating	24 Vin models 48 Vin models	-0.7-50 -0.7-100		VDC
Peak Input Voltage time			1000	ms
Input reflected ripple current			20	mA p-p
Quiescent Current		15		mA
On/Off Control	ON – High (3.0 ... 12Vdc) or open circuit; OFF – Low (0 ... 1.2Vdc) or Short circuit pin1 and pin 2/3 OFF idle current: 5.0 mA typ			

Isolation Specifications

Parameters	Conditions	Typical	Rated	Units
Tested I/O voltage	60 sec		1600	VDC
Tested Case/Input and Output		1600		VDC
Resistance		>1000		MOhm
Capacitance		1500		pF

Output Specifications

Parameters	Conditions	Typical	Maximum	Units
Voltage accuracy		±1.2		%
Voltage balance*	Dual output	±5		%
Line voltage regulation	HL-LL		±0.2	%
Load voltage regulation	0% Load to Full Load , single output models 0% Load to Full Load , Dual output models		±0.5 ±1.0	%
Over voltage protection	Zener diode clamp			
Over current protection	Full Load	170		%
Short Circuit protection	Continuous			
Short circuit restart	Auto recovery			
Temperature coefficient		±0.02		%/ºC
Ripple & Noise**			85	m Vp-p

* One of the outputs is at 100% load while the other output is at 25% to 100% load.
** Measured at 20MHz bandwidth with a 1uF ceramic capacitor.

General Specifications

Parameters	Conditions	Typical	Maximum	Units
Switching frequency	100% load	270		KHz
Operating temperature	Full Load with derating above 60ºC	-40 to +85		ºC
Storage temperature		-40 to +125		ºC
Max Case temperature			105	ºC
Derating	Above 60ºC	2.5		%/ ºC
Cooling	Free air convection			
Humidity			95	% RH
Case material	Nickel-coated Copper			
Weight		18.0		g
Dimensions (L x W x H)	Tolerance ±0.5 mm or ±0.02 inches	1.25 x 0.80 x 0.40 inches mm		31.80 x 20.30 x 10.20
MTBF	>1 000 000 hrs (MIL-HDBK -217F, Ground Benign, t=+25ºC)			

NOTE: All specifications in this datasheet are measured at an ambient temperature of 25°C, humidity<75%, nominal input voltage and at rated output load unless otherwise specified

Safety Specifications

Parameters	
Agency Approval	UL
Standards	UL62368-1
	EN55032 Class A, with the recommended EMI circuit
	IEC61000-4-2, Perf. Criteria B
	IEC61000-4-3, Perf. Criteria A
	IEC61000-4-4, Perf. Criteria B (external 330uF/100V cap required)
	IEC61000-4-5, Perf. Criteria B (external 330uF/100V cap required)
	IEC61000-4-6, Perf. Criteria A
	IEC61000-4-8, Perf. Criteria A
	Note: also meets IEC 60950-1:2001

Pin Out Specifications

Pin	Single	Dual
1	Remote On/Off	Remote On/Off
2	-V Input	-V Input
3	-V Input	-V Input
9	No Pin	Common
11	N.C	-V Output
14	+V Output	+V Output
16	-V Output	Common
22	+V Input	+V Input
23	+V Input	+V Input

Dimensions

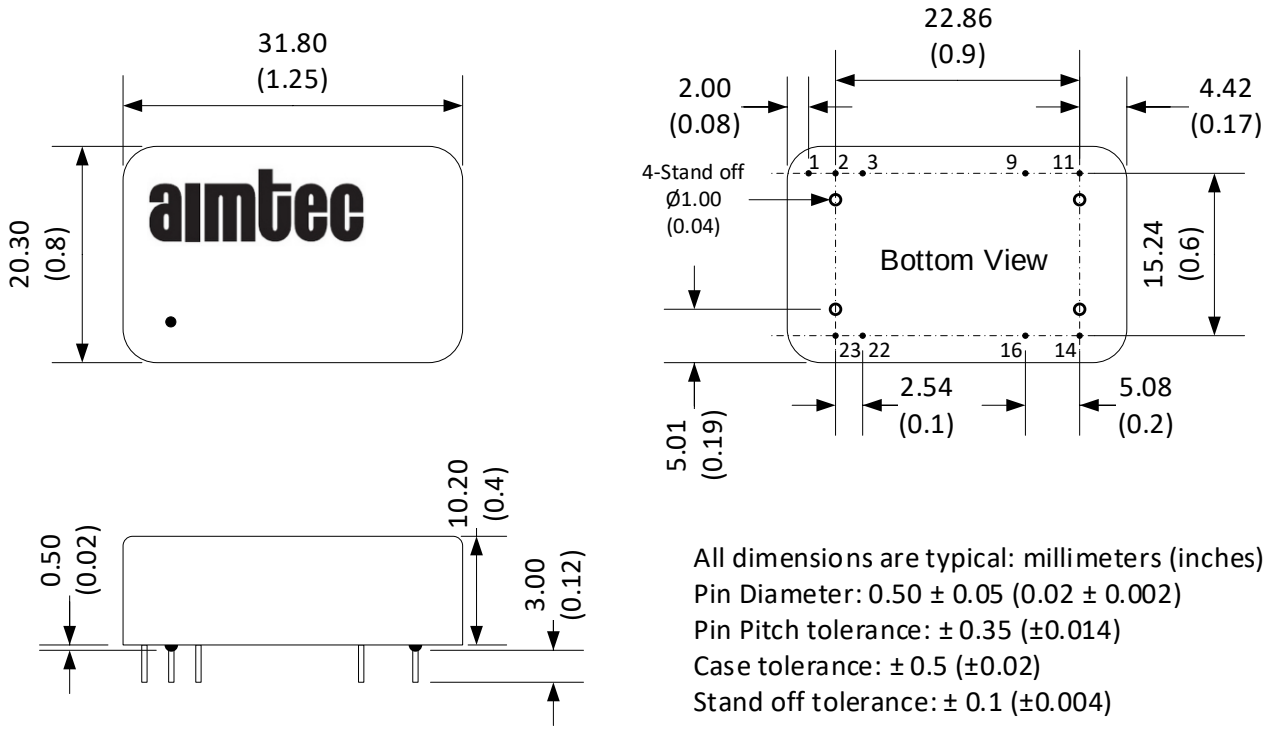

All dimensions are typical: millimeters (inches)
Pin Diameter: 0.50 ± 0.05 (0.02 ± 0.002)
Pin Pitch tolerance: ± 0.35 (±0.014)
Case tolerance: ± 0.5 (±0.02)
Stand off tolerance: ± 0.1 (±0.004)

Derating

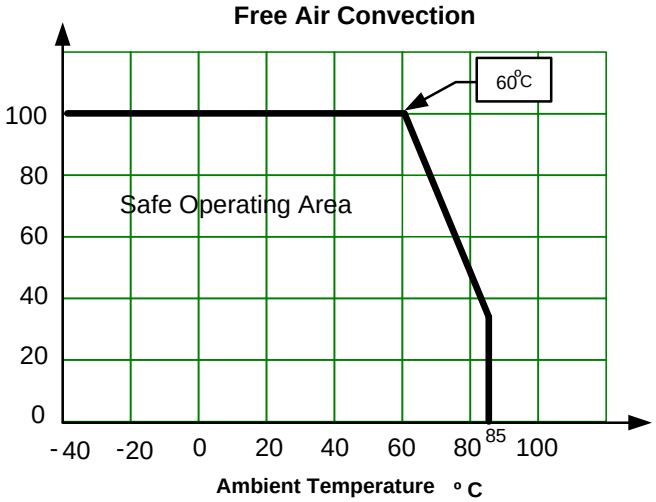

Test Circuits

Conducted Emmisions :

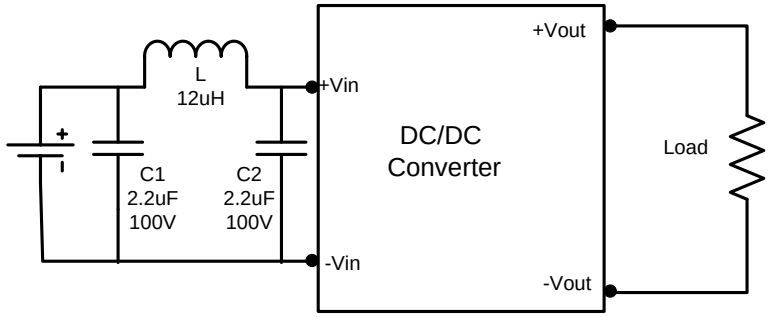

Surge:

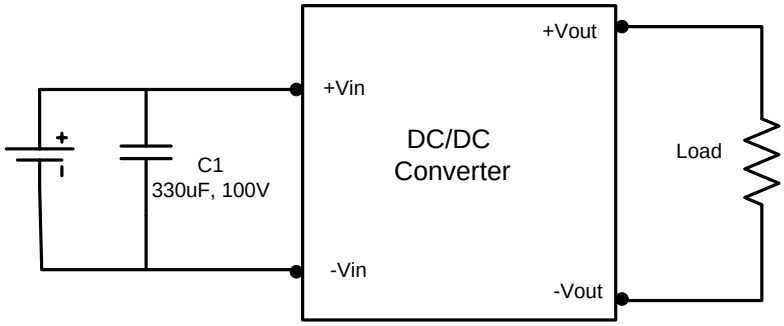

NOTE: 1. Datasheets are updated as needed and as such, specifications are subject to change without notice. Once printed or downloaded, datasheets are no longer controlled by Aimtec; refer to www.aimtec.com for the most current product specifications. **2.** Product labels shown, including safety agency certifications on labels, may vary based on the date manufactured. **3.** Mechanical drawings and specifications are for reference only. **4.** All specifications are measured at an ambient temperature of 25°C, humidity<75%, nominal input voltage and at rated output load unless otherwise specified. **5.** Aimtec may not have conducted destructive testing or chemical analysis on all internal components and chemicals at the time of publishing this document. CAS numbers and other limited information are considered proprietary and may not be available for release. **6.** This product is not designed for use in critical life support systems, equipment used in hazardous environments, nuclear control systems or other such applications which necessitate specific safety and regulatory standards other the ones listed in this datasheet. **7.** Warranty is in accordance with Aimtec's standard Terms of Sale available at www.aimtec.com.