aimtec
Your Power Partner

Series AM150QB-NZ

150 Watt | DC-DC Converter



FEATURES:

- ***Wide Input Range 4:1***
- Low no-load Power
- Efficiency up to 91%
- 2250VDC I/O Isolation
- Remote ON/OFF Control
- ***Meet EN50121-3-2***
- Industry Standard: 1/4 Brick
- Operating temperature -40˚C to + 85˚C
- Over Current, Over Voltage, Over Temperature & Continuous Short Circuit Protection

RoHS

Models
Single output

Model	Input Voltage (VDC)	Input Current No load/Full load typ. (mA)	Output Voltage (VDC)	Output Current max (A)	Max Capacitive load (μF)	Efficiency typ. (%)
AM150QB-4805SH22-NZ	48 (18-75)	100/3512	5	30	6000	88
AM150QB-4812SH22-NZ	48 (18-75)	100/3512	12	12.5	2000	91
AM150QB-4815SH22-NZ※	48 (18-75)	100/3512	15	10	2000	89
AM150QB-4824SH22-NZ	48 (18-75)	100/3512	24	6.25	1000	91
AM150QB-4848SH22-NZ※	48 (18-75)	100/3512	48	3.13	450	91

*Add suffix “-K” for optional heatsink
**Add suffix “-M” for optional aluminum alloy bottom case

NOTE: All specifications in this datasheet are measured at an ambient temperature of 25°C, humidity<75%, nominal input voltage and at rated output load unless otherwise specified.

Input Specifications

Parameters	Nominal	Typical	Maximum	Units
Voltage range	48V	18-75	80	VDC
Filter	π(Pi) Network			
Absolute Maximum Rating			-0.7-90	VDC
Peak Input Voltage time			1,000	ms
Input reflected ripple current		100		mA p-p
Under Voltage Lockout	On/Off	18/16		VDC
Remote On / OFF Control	ON: 3.5 ~ 12Vdc or Open Circuit OFF: 0 ~ 1.2Vdc or Ctrl connected to -Vin Idle current: 2-10mA			

Isolation Specifications

Parameters	Conditions	Typical	Rated	Units
Tested I/O voltage	60s		2250	VDC
Input to Case	60s		1500	VDC
Output to Case	60s		500	VDC
Resistance		>100		MOhm
Capacitance		2200		pF

Output Specifications

Parameters	Conditions	Typical	Maximum	Units
Voltage accuracy	0%-100% load	±1	±3	%
Over voltage protection	Zener Diode Clamp			
Over load protection		110~150		% of Iout
Short Circuit protection	Continuous, Auto-recovery			
Thermal shutdown	On Case	115	120	°C
Line voltage regulation	LI-HI, Full load	±0.2	±0.5	
Load voltage regulation	0% to 100% Full Load	±0.5	±0.75	%
Temperature coefficient			±0.03	%/°C
Ripple & Noise	20MHz Bandwidth	150	250	mV p-p
Transient Response Deviation	25% load step change, 5V Vout	±3	±7.5	% of Max
	25% load step change, Others	±3	±5	% of Max

Output Specifications(Continued)

Parameters	Conditions	Typical	Maximum	Units
Transient Recovery		300	500	µsec
Voltage adjustment range		±10		%
Sense compensation			5	%

General Specifications

Parameters	Conditions	Typical	Maximum	Units
Switching frequency		250		KHz
Operating temperature	With derating	-40 to +85		°C
Storage temperature		-55 to +125		°C
Maximum case temperature		115	120	°C
Cooling	Free Air Convection			
Humidity			95	% RH
Case material	non-conductive Black Plastic (UL94V-0 rated)			
Weight		89		g
	with optional aluminum case	109		g
	with Heatsink	120		g
Dimensions (L x W x H)		2.43 x 1.65 x 0.50 inches (61.8 x 40.2 x 12.7 mm)		
	with optional aluminum case	2.44 x 2.20 x 0.57 inches (62.0 x 56.0 x 14.6 mm)		
	with Heatsink	2.43 x 1.65 x 1.09 inches (61.8 x 40.2 x 27.7 mm)		
MTBF	>500,000 hrs (MIL-HDBK-217 F at +25 °C)			
Manual soldering temperature	1.5mm from case for 10 sec		300	°C
Wave soldering temperature	Maximum duration 10sec		260	°C

Environment Approval

Parameters	Conditions
Shock and Vibrations	IEC/EN 61373 Category 1, class B

Safety Specifications

Parameters		
Agency approvals	CE EN62368-1	
Standards	Designed to meet IEC 62368-1 (With exception of models marked with ※)	
	EMI - Conducted and radiated emission	CISPR32/EN55032, class A with the recommended EMC circuit
	Electrostatic Discharge Immunity	IEC 61000-4-2 / EN50121-3-2, Contact ±6KV Air ±8KV, Criteria B
	RF, Electromagnetic Field Immunity	IEC 61000-4-3 / EN50121-3-2, 10V/m, Criteria A
	Electrical Fast Transient/Burst Immunity	IEC 61000-4-4 / EN50121-3-2, ±2kV with the recommended EMC circuit, Criteria A
	Surge Immunity	EN50121-3-2, Differential mode ±1KV with the recommended EMC circuit, Criteria B
	RF, Conducted Disturbance Immunity	IEC 61000-4-6 / EN50121-3-2, 10Vrms, Criteria A

Pin Out Specifications

Pin	Single
1	+V Input
2	On/Off Control
3	-V Input
4	Vo -
5	Sense -
6	Trim
7	Sense +
8	Vo +

Dimensions

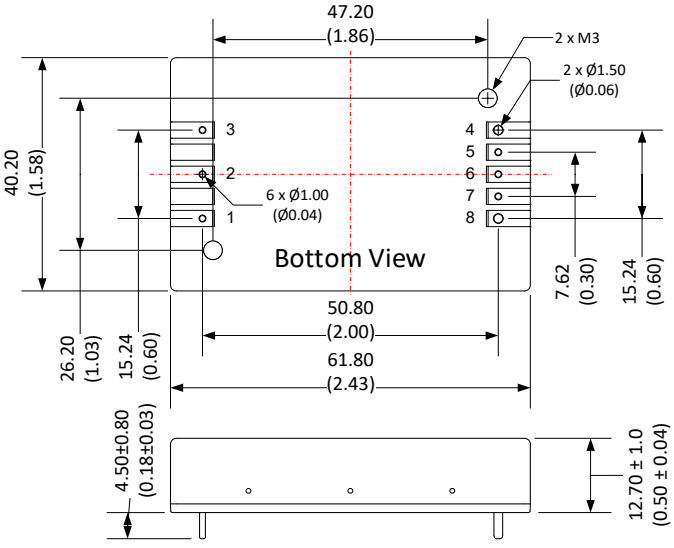

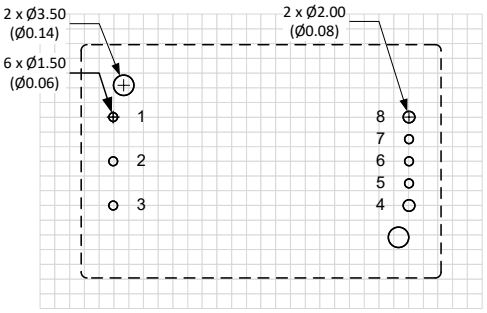

Grid:2.54*2.54mm

Dimensions: mm (inch)
General Tolerance: ±0.50 (0.02)
Pin diameter Tolerance: ±0.10 (0.004)
Pin 1, 2, 3, 5, 6 & 7 diameter: 1.00 (0.04)
Pin 4 & 8 diameter: 1.50 (0.06)
Mounting hole screw torque: max 0.4 N m

Model Dimensions with Optional Heatsink (-K option)

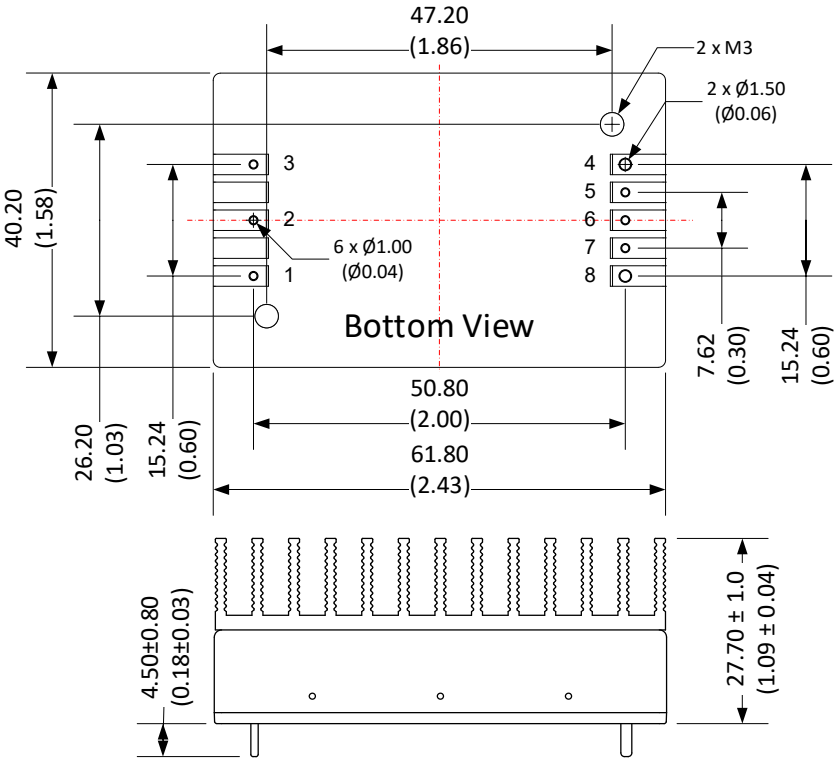

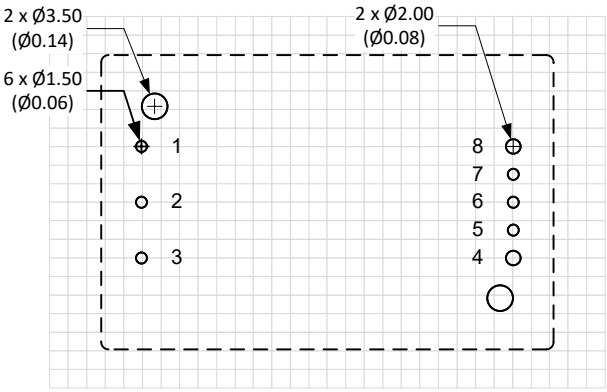

Grid:2.54*2.54mm

Dimensions: mm (inch)
General Tolerance: ±0.50 (0.02)
Pin diameter Tolerance: ±0.10 (0.004)
Pin 1, 2, 3, 5, 6 & 7 diameter: 1.00 (0.04)
Pin 4 & 8 diameter: 1.50 (0.06)
Mounting hole screw torque: max 0.4 N m

Model Dimensions with Optional Aluminum Alloy Case (-M option)

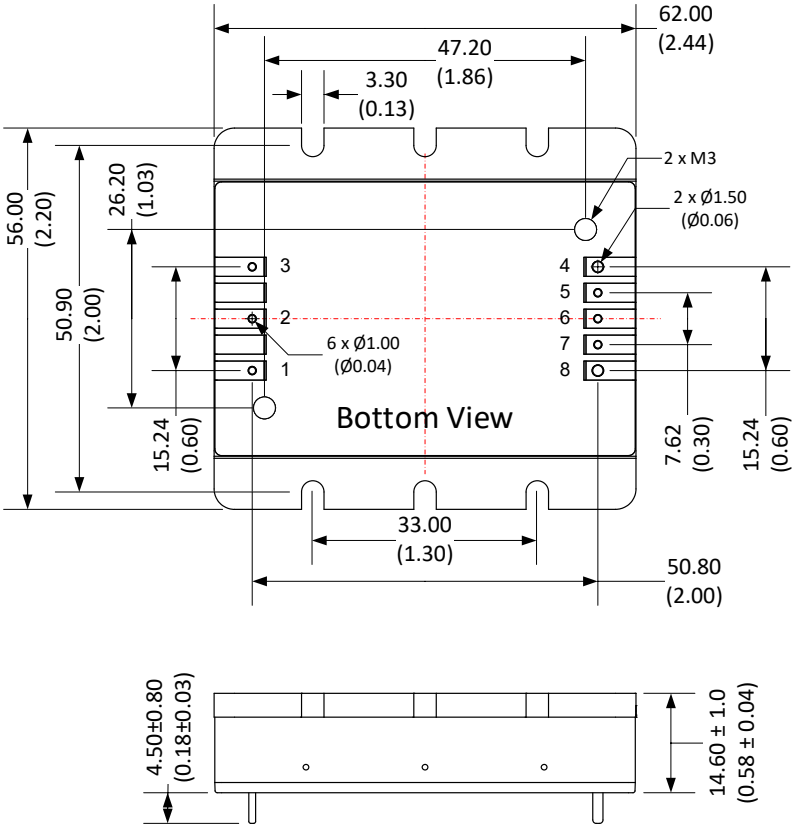

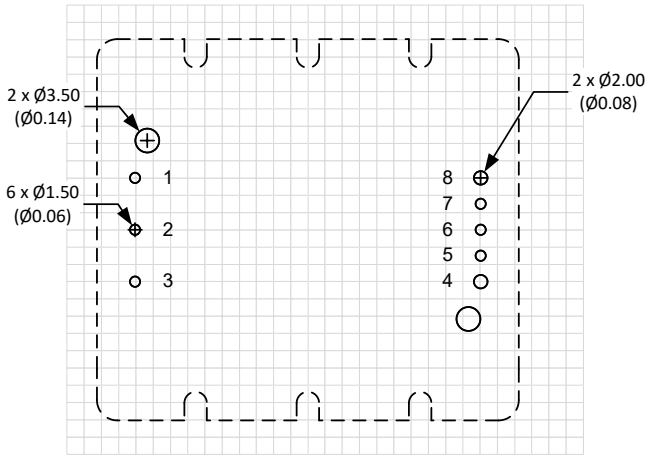

Grid:2.54*2.54mm

Dimensions: mm (inch)
General Tolerance: ±0.50 (0.02)
Pin diameter Tolerance: ±0.10 (0.004)
Pin 1, 2, 3, 5, 6 & 7 diameter: 1.00 (0.04)
Pin 4 & 8 diameter: 1.50 (0.06)
Mounting hole screw torque: max 0.4 N m

Derating

AM150QB-4805SH22-NZ

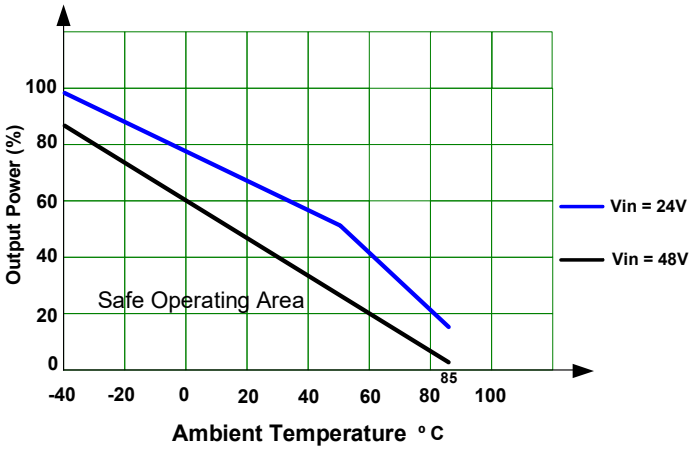

AM150QB-4815SH22-NZ

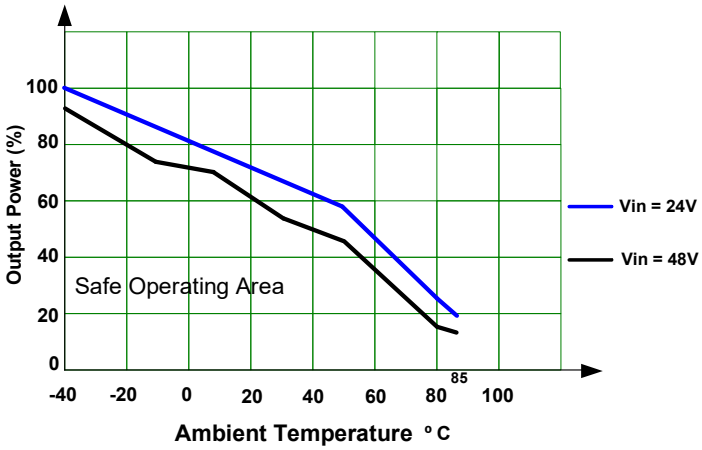

AM150QB-4812/24/48SH22-NZ

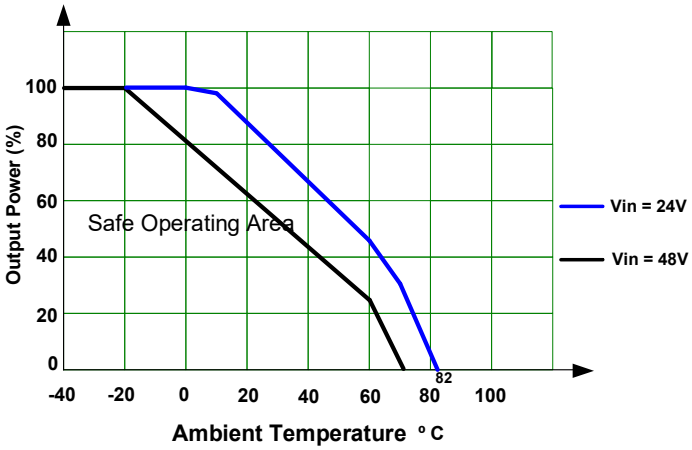

AM150QB-4824SH22-NZ-M

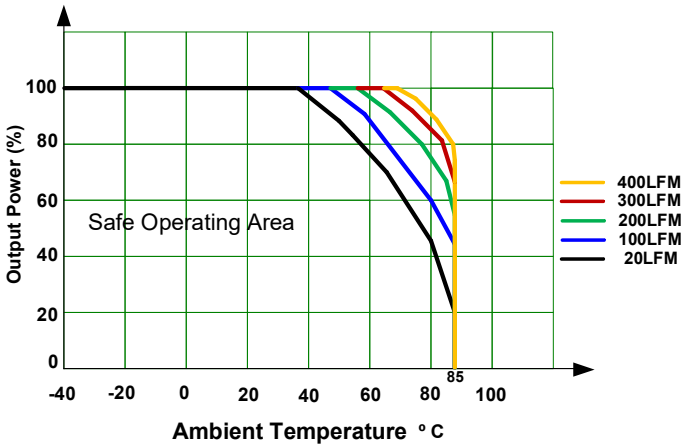

AM150QB-4824SH22-NZ-K

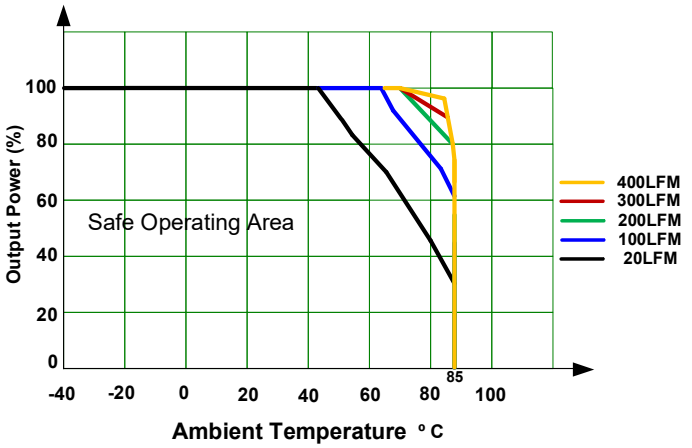

Typical Application Circuits

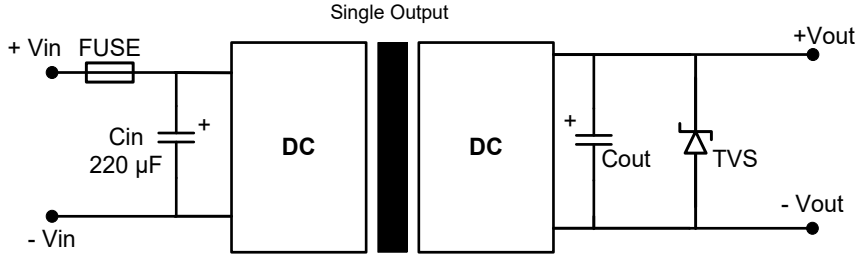

Output	5V	12V	15V	24V	48V
TVS (V)	6	14	17	26	54
Cout (µF)	470	220	220	100	100
FUSE	15A, slow type				

Note:
1. When not using the sense function, connect the +sence to +Vout and -sence to -Vout with the shortest possibel traces to avoid interference and minimize the voltage drop.
2. When using the sence function, connect the sence pins to the load with the shortest possibel traces, twisted pair wire or shielded wire and make sure the voltage drop is less than 0.3V.

Recommended EMC Circuits

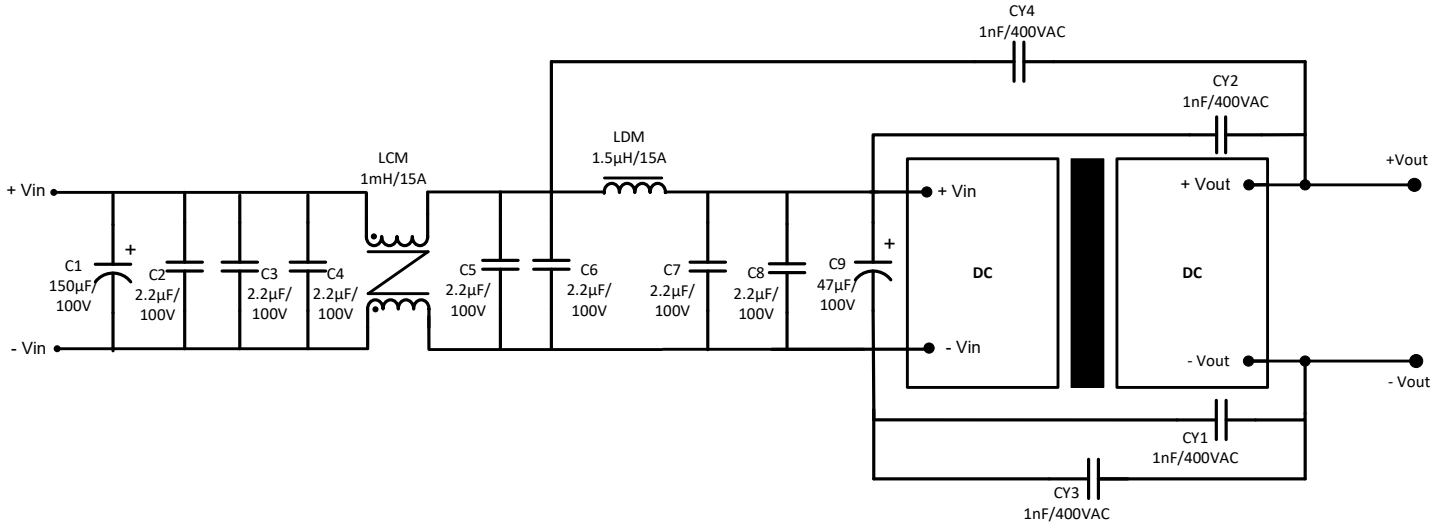

Trimming

Output voltage can be externally trimmed by utilizing the methods as shown below

Fixed Resistor

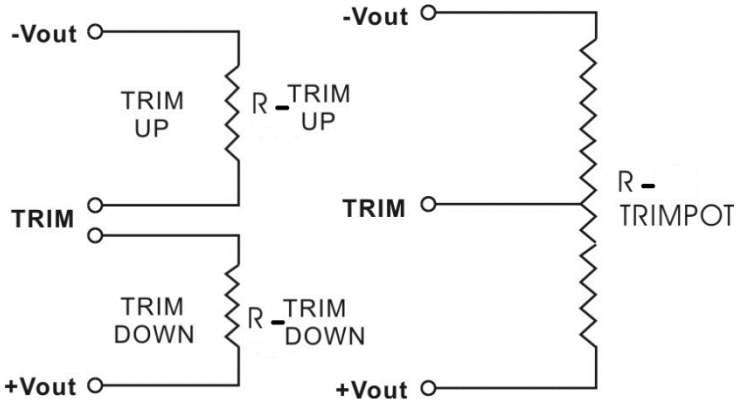

Variable Potentiometer

Leave open if not used.

AM150QB-4805SH22-NZ

Trim down %	1	2	3	4	5	6	7	8	9	10
Vout (VDC)	4.95	4.9	4.85	4.8	4.75	4.7	4.65	4.6	4.55	4.5
Rt down (KΩ)	82.978	46.049	29.637	20.360	14.396	10.240	7.177	4.827	2.966	1.457
Trim up %	1	2	3	4	5	6	7	8	9	10
Vout (VDC)	5.05	5.1	5.15	5.2	5.25	5.3	5.35	5.4	5.45	5.5
Rt up (KΩ)	369.500	98.429	53.250	34.647	24.500	18.111	13.719	10.514	8.071	6.149

AM150QB-4812SH22-NZ

Trim down %	1	2	3	4	5	6	7	8	9	10
Vout (VDC)	11.88	11.76	11.64	11.52	11.4	11.28	11.16	11.04	10.92	10.8
Rt down (KΩ)	496.092	301.452	212.527	161.585	128.573	105.442	88.332	75.164	64.716	56.223
Trim up %	1	2	3	4	5	6	7	8	9	10
Vout (VDC)	12.12	12.24	12.36	12.48	12.6	12.72	12.84	12.96	13.08	13.2
Rt up (KΩ)	706.435	158.920	83.879	54.075	38.077	28.095	21.274	16.317	12.552	9.595

AM150QB-4815SH22-NZ

Trim down %	1	2	3	4	5	6	7	8	9	10
Vout (VDC)	14.85	14.7	14.55	14.4	14.25	14.1	13.95	13.8	13.65	13.5
Rt down (KΩ)	965.116	508.787	339.586	251.370	197.224	160.605	134.188	114.231	98.623	86.082
Trim up %	1	2	3	4	5	6	7	8	9	10
Vout (VDC)	15.15	15.3	15.45	15.6	15.75	15.9	16.05	16.2	16.35	16.5
Rt up (KΩ)	269.667	113.379	67.878	46.190	33.499	25.168	19.279	14.896	11.507	8.808

AM150QB-4824SH22-NZ

Trim down %	1	2	3	4	5	6	7	8	9	10
Vout (VDC)	23.76	23.52	23.28	23.04	22.8	22.56	22.32	22.08	21.84	21.6
Rt down (KΩ)	1289.000	794.923	568.667	438.904	354.754	295.763	252.115	218.514	191.847	170.170
Trim up %	1	2	3	4	5	6	7	8	9	10
Vout (VDC)	24.24	24.48	24.72	24.96	25.2	25.44	25.68	25.92	26.16	26.4
Rt up (KΩ)	819.689	182.714	97.138	63.264	45.107	33.788	26.057	20.440	16.176	12.827

AM150QB-4848SH22-NZ

Trim down %	1	2	3	4	5	6	7	8	9	10
Vout (VDC)	47.52	47.04	46.56	46.08	45.6	45.12	44.64	44.16	43.68	43.2
Rt down (KΩ)	4953.999	2443.889	1606.786	1188.160	936.961	769.484	649.854	560.128	490.339	434.508
Trim up %	1	2	3	4	5	6	7	8	9	10
Vout (VDC)	48.48	48.96	49.44	49.92	50.4	50.88	51.36	51.84	52.32	52.8
Rt up (KΩ)	261.328	123.114	77.065	54.045	40.234	31.027	24.451	19.519	15.684	12.615

NOTE: 1. Datasheets are updated as needed and as such, specifications are subject to change without notice. Once printed or downloaded, datasheets are no longer controlled by Aimtec; refer to www.aimtec.com for the most current product specifications. **2.** Product labels shown, including safety agency certifications on labels, may vary based on the date manufactured. **3.** Mechanical drawings and specifications are for reference only. **4.** All specifications are measured at an ambient temperature of 25°C, humidity<75%, nominal input voltage and at rated output load unless otherwise specified. **5.** Aimtec may not have conducted destructive testing or chemical analysis on all internal components and chemicals at the time of publishing this document. CAS numbers and other limited information are considered proprietary and may not be available for release. **6.** This product is not designed for use in critical life support systems, equipment used in hazardous environments, nuclear control systems or other such applications which necessitate specific safety and regulatory standards other the ones listed in this datasheet. **7.** Warranty is in accordance with Aimtec's standard Terms of Sale available at www.aimtec.com.