aimtec
Your Power Partner

Series AM15C-Z
15Watt | DC-DC Converter



FEATURES:

- Ultra-compact footprint 1”x1”
- Wide Input Range 2:1
- 1600 VDC Isolation
- Remote ON/OFF Function
- No Minimum Load Required
- Adjustable Output Voltage
- Operating Temperature -40ºC to +85ºC
- Over Current and Over Voltage Protection
- Efficiency up to 89%
- RoHS Compliant

Models
Single output

Model	Input Voltage (V)	Output Voltage (V)	Output Current max (A)	Isolation (VDC)	Max Capacitive Load (uF)	Efficiency (%)
AM15C-1203SZ	9-18	3.3	4	1600	1000	85
AM15C-1205SZ	9-18	5	3	1600	1000	86
AM15C-1212SZ	9-18	12	1.3	1600	330	88
AM15C-1215SZ	9-18	15	1	1600	220	89
AM15C-2403SZ	18-36	3.3	4	1600	1000	86
AM15C-2405SZ	18-36	5	3	1600	1000	87
AM15C-2412SZ	18-36	12	1.3	1600	330	88
AM15C-2415SZ	18-36	15	1	1600	220	89
AM15C-4803SZ	36-75	3.3	4	1600	1000	85
AM15C-4805SZ	36-75	5	3	1600	1000	86
AM15C-4812SZ	36-75	12	1.3	1600	330	88
AM15C-4815SZ	36-75	15	1	1600	220	88

Models
Dual output

Model	Input Voltage (V)	Output Voltage (V)	Output Current max (A)	Isolation (VDC)	Max Capacitive Load (uF)	Efficiency (%)
AM15C-1205DZ	9-18	±5	±1.5	1600	±470	85
AM15C-1212DZ	9-18	±12	±0.625	1600	±220	89
AM15C-1215DZ	9-18	±15	±0.5	1600	±100	89
AM15C-2405DZ	18-36	±5	±1.5	1600	±470	85
AM15C-2412DZ	18-36	±12	±0.625	1600	±220	88
AM15C-2415DZ	18-36	±15	±0.5	1600	±100	89
AM15C-4805DZ	36-75	±5	±1.5	1600	±470	84
AM15C-4812DZ	36-75	±12	±0.625	1600	±220	87
AM15C-4815DZ	36-75	±15	±0.5	1600	±100	88

NOTE: All specifications in this datasheet are measured at an ambient temperature of 25°C, humidity<75%, nominal input voltage and at rated output load unless otherwise specified.

Input Specifications

Parameters	Nominal	Typical	Maximum	Units
Voltage range	12	9-18		VDC
	24	18-36		VDC
	48	36-75		VDC
Filter	π			
Start up time	Nominal Vin with constant resistive load	20		ms
Absolute Maximum Rating	12 Vin		36	VDC
	24 Vin		50	VDC
	48 Vin		100	VDC
Peak Input Voltage time			100	ms
On/Off control	ON –3 to 12VDC (or open)			
	OFF – 0 to 1.2VDC or short pin 2 to pin 3; OFF idle current – 5mA			

Input Specifications (continued)

Parameters	Nominal	Typical	Maximum	Units
No load current	12 Vin		20	mA
	24 Vin		15	mA
	48 Vin		10	mA
Input reflected ripple current		20		mA p-p

Isolation Specifications

Parameters	Conditions	Typical	Rated	Units
Tested I/O voltage	60 sec		1600	VDC
Case to Input	60 sec	1600		VDC
Case to Output	60 sec	1600		VDC
Resistance		>1000		MOhm
Capacitance		1200		pF

Output Specifications

Parameters	Conditions	Typical	Maximum	Units
Voltage accuracy			±1	%
Cross Regulation (Dual Output Models)	25-100% load on one output - 100% load on second load		±5	%
Over voltage protection	Zener Diode Clamp, 3.3Vout	3.9		VDC
	Zener Diode Clamp, 5Vout	6.2		VDC
	Zener Diode Clamp, 12Vout	15		VDC
	Zener Diode Clamp, 15Vout	18		VDC
	Zener Diode Clamp, ±5Vout	±6.2		VDC
	Zener Diode Clamp, ±12Vout	±15		VDC
	Zener Diode Clamp, ±15Vout	±18		VDC
Over load protection	Full Load	150		%
Short Circuit protection	Continuous			
Short circuit restart	Auto-Recovery			
Line voltage regulation (Single)	HL-LL		±0.2	%
Line voltage regulation (Dual)	HL-LL balanced load		±0.5	%
Load voltage regulation (Single)	0% to 100% load		±0.5	%
Load voltage regulation (Dual)	0% to 100% balanced load		±1	%
Transient recovery time	Load step change 75% to 50% to 25%	250		µS
Transient recovery deviation	Load step change 75% to 50% to 25%		±3	%
Temperature coefficient		±0.02		%/ºC
Ripple & Noise*	20MHz Bandwidth		100	mV p-p
Voltage adjustment range	Trim - Single output models only		±10	%

***** Measured with a 1.0µF ceramic capacitor and 10µF tantalum capacitor.

General Specifications

Parameters	Conditions	Typical	Maximum	Units
Switching frequency	100% load	375		KHz
Operating temperature	With derating above +66°C	-40 to +85		ºC
Storage temperature		-40 to +125		ºC
Maximum case temperature			105	ºC
Derating		2.6		%/ ºC
Cooling	Free air convection (30-65LFM)			
Humidity			95	% RH
Case material	Nickel-coated copper			
Weight		18.1		g
Dimensions (L x W x H)	1.00 x 1.00 x 0.41 inches 25.40 x 25.40 x 10.40 mm			
MTBF	> 560,000 hrs (MIL-HDBK -217F, Ground Benign, t=+25ºC)			
Maximum soldering temperature	1.5mm from case for 10 sec		260	ºC

Safety Specifications

Parameters	
Agency Approvals	CE, UL
Standards	UL 60950-1, UL62368-1
	EN 55032 Class A
	EN 61000-4-2 Perf. Criteria A
	EN 61000-4-3 Perf. Criteria A
	EN 61000-4-4 Perf. Criteria A (external 220uF/100V cap required)
	EN 61000-4-5 Perf. Criteria A (external 220uF/100V cap required)
	EN 61000-4-6 Perf. Criteria A
	EN 61000-4-8 Perf. Criteria A

Test Circuits

Notes
1. Input filter (C1, C2, L) are needed to meet conducted emission (EN 55032 Class A) and should be mounted as close as possible to the converter.

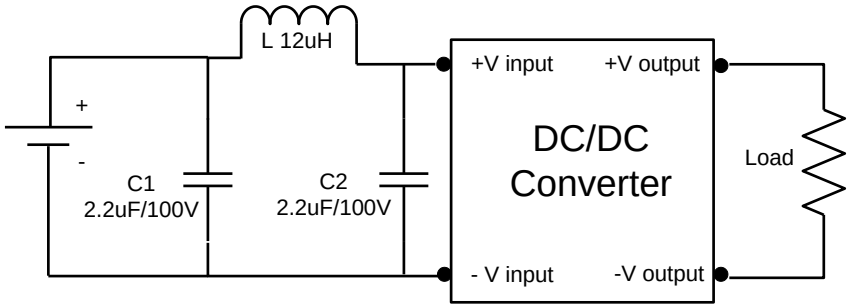

Surge:

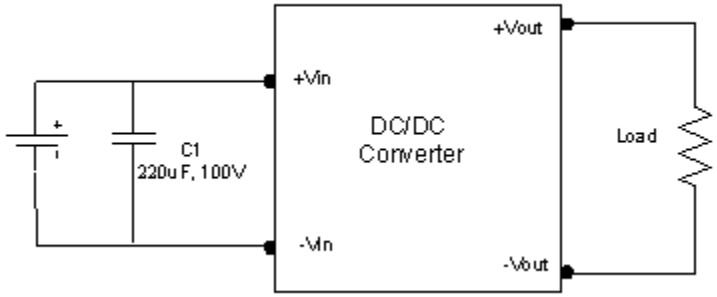

Pin Out Specifications

Pin	Single	Dual
1	+ V input	+ V input
2	- V input	- V input
3	On/Off Control	On/Off Control
4	+ V output	+ V output
5	Trim	Common
6	- V output	- V output

Dimensions

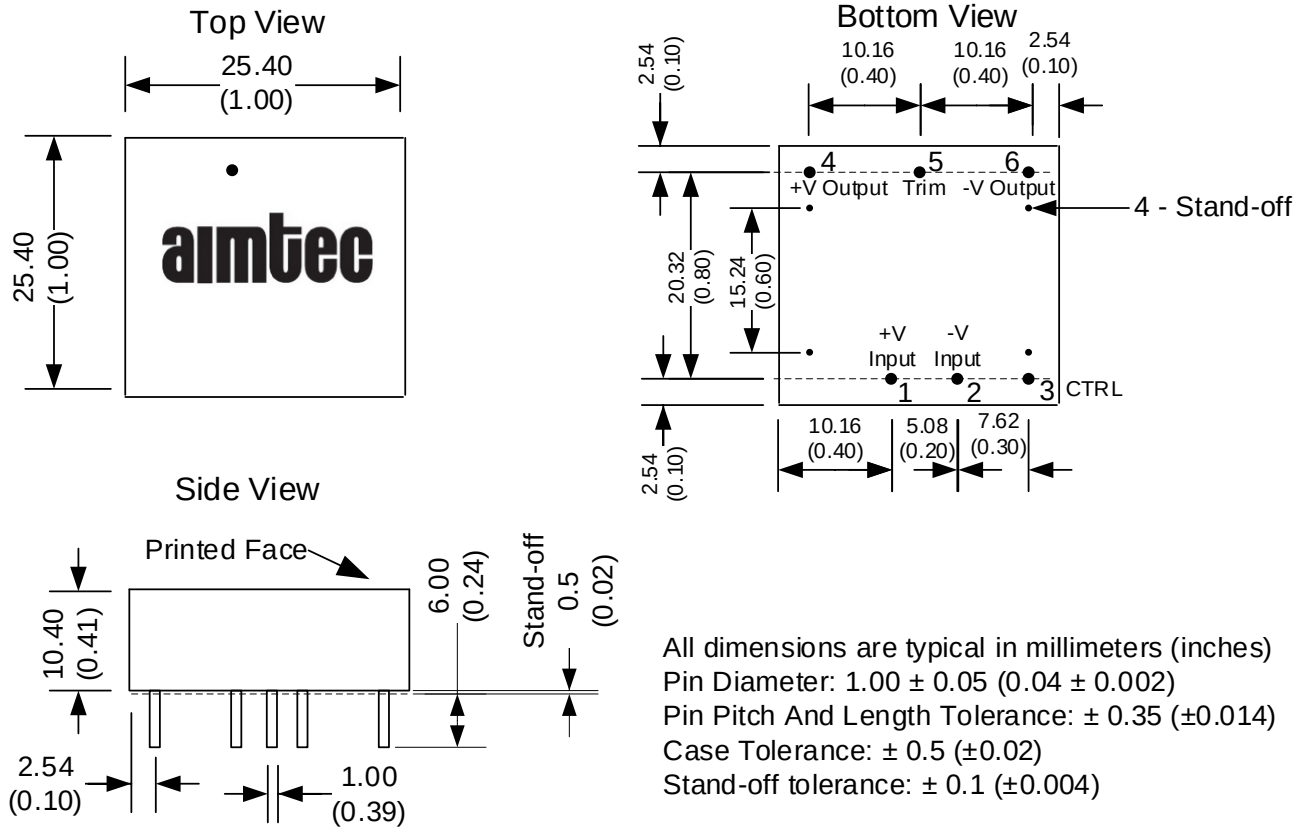

All dimensions are typical in millimeters (inches)
Pin Diameter: 1.00 ± 0.05 (0.04 ± 0.002)
Pin Pitch And Length Tolerance: ± 0.35 (±0.014)
Case Tolerance: ± 0.5 (±0.02)
Stand-off tolerance: ± 0.1 (±0.004)

Derating

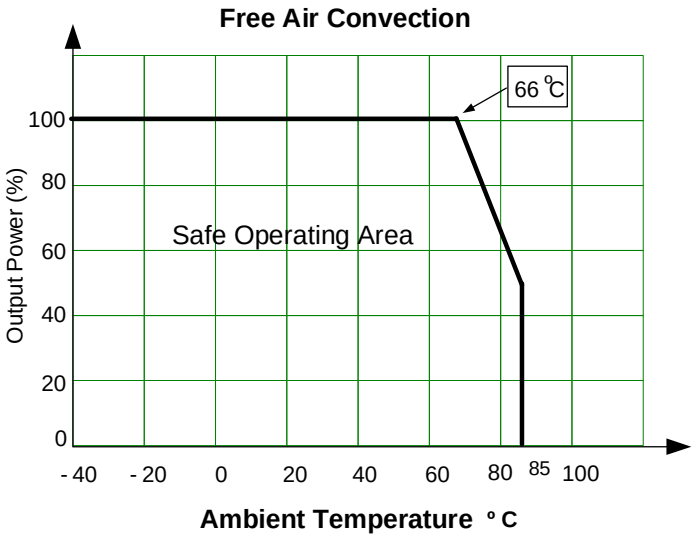

Trimming

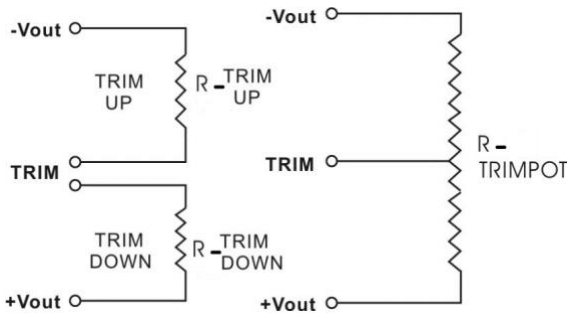

NOTE: 1. Datasheets are updated as needed and as such, specifications are subject to change without notice. Once printed or downloaded, datasheets are no longer controlled by Aimtec; refer to www.aimtec.com for the most current product specifications. **2.** Product labels shown, including safety agency certifications on labels, may vary based on the date manufactured. **3.** Mechanical drawings and specifications are for reference only. **4.** All specifications are measured at an ambient temperature of 25°C, humidity<75%, nominal input voltage and at rated output load unless otherwise specified. **5.** Aimtec may not have conducted destructive testing or chemical analysis on all internal components and chemicals at the time of publishing this document. CAS numbers and other limited information are considered proprietary and may not be available for release. **6.** This product is not designed for use in critical life support systems, equipment used in hazardous environments, nuclear control systems or other such applications which necessitate specific safety and regulatory standards other the ones listed in this datasheet. **7.** Warranty is in accordance with Aimtec's standard Terms of Sale available at www.aimtec.com.