aimtec
Your Power Partner

Series AM15CW-Z

15Watt | DC-DC Converter



FEATURES:

- Ultra-compact footprint 1”x1”
- Ultra-wide Input Range 4:1
- 1600 VDC Isolation
- Remote ON/OFF Function
- No Minimum Load Required
- Adjustable Output Voltage
- Operating Temperature -40ºC to +85ºC
- Over Current and Over Voltage Protection
- Efficiency up to 89%
- RoHS Compliant

Models
Single output

Model	Input Voltage (V)	Output Voltage (V)	Output Current max (A)	Isolation (VDC)	Max Capacitive Load (uF)	Efficiency (%)
AM15CW-2403SZ	9-36	3.3	4	1600	1000	86
AM15CW-2405SZ	9-36	5	3	1600	1000	87
AM15CW-2412SZ	9-36	12	1.3	1600	330	88
AM15CW-2415SZ	9-36	15	1	1600	220	89
AM15CW-4803SZ	18-75	3.3	4	1600	1000	84
AM15CW-4805SZ	18-75	5	3	1600	1000	86
AM15CW-4812SZ	18-75	12	1.3	1600	330	87
AM15CW-4815SZ	18-75	15	1	1600	220	88

Models
Dual output

Model	Input Voltage (V)	Output Voltage (V)	Output Current max (A)	Isolation (VDC)	Max Capacitive Load (uF)	Efficiency (%)
AM15CW-2405DZ	9-36	±5	±1.5	1600	±470	85
AM15CW-2412DZ	9-36	±12	±0.625	1600	±220	88
AM15CW-2415DZ	9-36	±15	±0.5	1600	±100	89
AM15CW-4805DZ	18-75	±5	±1.5	1600	±470	84
AM15CW-4812DZ	18-75	±12	±0.625	1600	±220	87
AM15CW-4815DZ	18-75	±15	±0.5	1600	±100	88

NOTE: All specifications in this datasheet are measured at an ambient temperature of 25°C, humidity<75%, nominal input voltage and at rated output load unless otherwise specified.

Input Specifications

Parameters	Nominal	Typical	Maximum	Units
Voltage range	24 48	9-36 18-75		VDC
Filter	π			
Start up time	Nominal Vin with constant resistive load	20		ms
Absolute Maximum Rating	24 Vin 48 Vin		50 100	VDC
Peak Input Voltage time			100	ms
On/Off control	ON –3 to 12VDC (or open) ; OFF – 0 to 1.2VDC or short pin 2 to pin 3; OFF idle current – 5mA			
No load current	24 Vin 48 Vin		15 10	mA
Input reflected ripple current		20		mA p-p

Isolation Specifications

Parameters	Conditions	Typical	Rated	Units
Tested I/O voltage	60 sec		1600	VDC
Case to Input	60 sec	1600		VDC
Case to Output	60 sec	1600		VDC
Resistance		>1000		MOhm
Capacitance		1200		pF

Output Specifications

Parameters	Conditions	Typical	Maximum	Units
Voltage accuracy			±1	%
Cross Regulation*	Dual Output Models		±5	%
Over voltage protection	Zener Diode Clamp	120		%
Over current protection	Full Load	170		%
Short Circuit protection	Continuous			
Short circuit restart	Auto-Recovery			
Line voltage regulation (Single)	HL-LL		±0.2	%
Line voltage regulation (Dual)	HL-LL, balanced load		±0.5	%
Load voltage regulation (Single)	0% to 100% load		±0.5	%
Load voltage regulation (Dual)	0% to 100% balanced load		±1	%
Temperature coefficient		±0.02		%/°C
Ripple & Noise**	20MHz Bandwidth		100	mV p-p
Voltage adjustment range	Trim - Single output models only		10	%

* One of the outputs is at 100% load while the other output is at 25% to 100% load.
** Measured at 20MHz bandwidth with a 1uF ceramic capacitor and a 10µF tantalum capacitor.

General Specifications

Parameters	Conditions	Typical	Maximum	Units
Switching frequency	100% load	375		KHz
Operating temperature	With derating above +66°C	-40 to +85		°C
Storage temperature		-55 to +125		°C
Maximum case temperature			105	°C
Derating	66 to 85°C	2.6		%/ °C
Cooling	Free air convection (30-65LFM)			
Humidity			95	% RH
Case material	Nickel-coated copper			
Weight		18.1		g
Dimensions (L x W x H)	1.00 x 1.00 x 0.41 inches 25.40 x 25.40 x 10.40 mm			
MTBF	> 560,000 hrs (MIL-HDBK -217F, Ground Benign, t=+25°C)			
Maximum soldering temperature	1.5mm from case for 10 sec		260	°C
Transient recovery time	Load step change 75% to 50% to 25%	250		µS
Transient recovery deviation	Load step change 75% to 50% to 25%	±3		%

Safety Specifications

Parameters	
Agency Approvals	CE, UL
Standards	UL 60950-1, UL62368-1
	EN 55032 Class A with the recommended EMC circuit
	EN 61000-4-2 Perf. Criteria A
	EN 61000-4-3 Perf. Criteria A
	EN 61000-4-4 Perf. Criteria A (external 220uF/100V cap required)
	EN 61000-4-5 Perf. Criteria A (external 220uF/100V cap required)
	EN 61000-4-6 Perf. Criteria A
	EN 61000-4-8 Perf. Criteria A

Pin Out Specifications

Pin	Single	Dual
1	+ V input	+ V input
2	- V input	- V input
3	On/Off Control	On/Off Control
4	+ V output	+ V output
5	Trim	Common
6	- V output	- V output

Dimensions

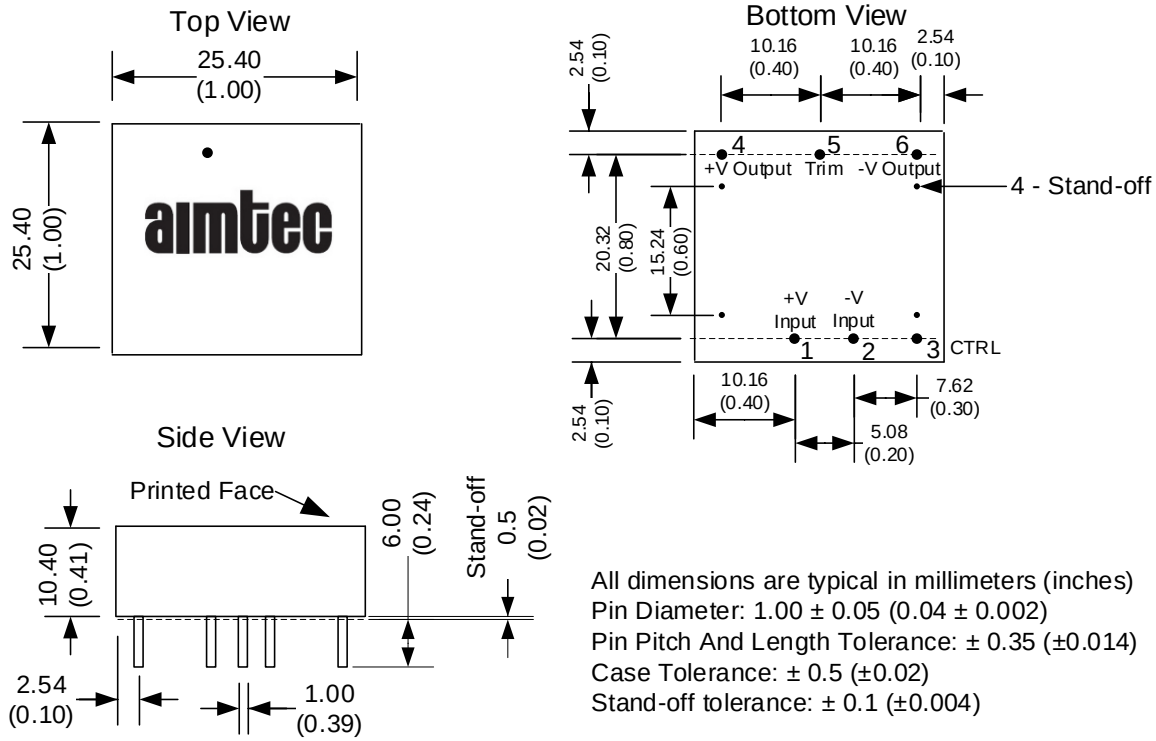

All dimensions are typical in millimeters (inches)
Pin Diameter: 1.00 ± 0.05 (0.04 ± 0.002)
Pin Pitch And Length Tolerance: ± 0.35 (±0.014)
Case Tolerance: ± 0.5 (±0.02)
Stand-off tolerance: ± 0.1 (±0.004)

Derating

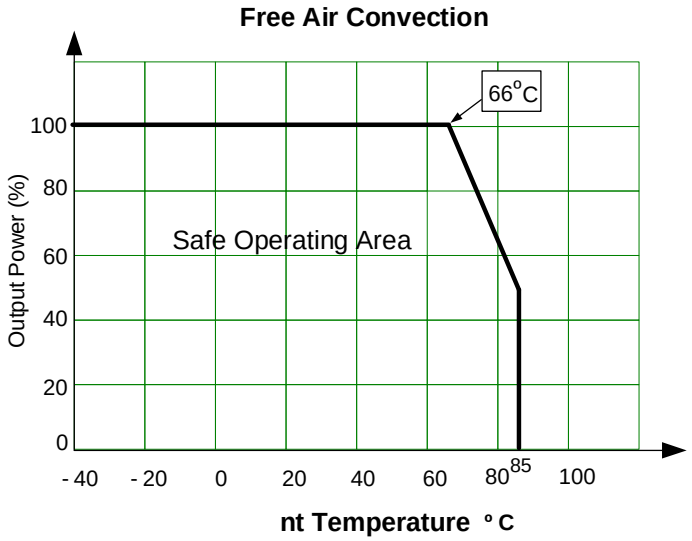

Trimming

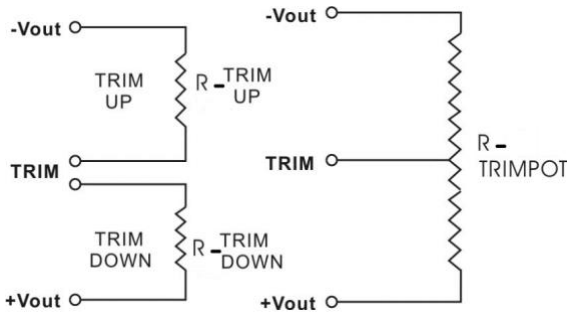

Test Circuits

Note: 1. Input filter (C1, C2, L) are needed to meet conducted emission (EN 55022 Class A) and should be mounted as close as possible to the converter.

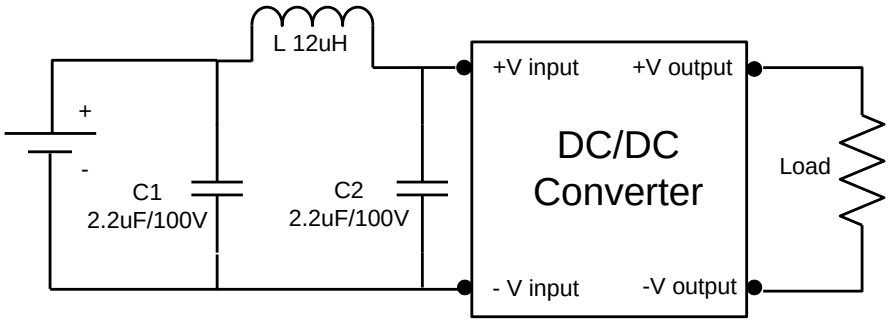

Surge:

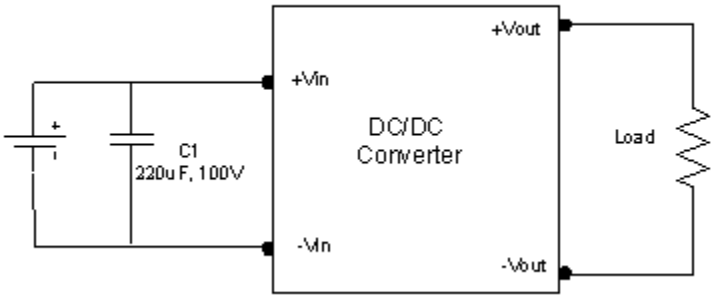

NOTE: 1. Datasheets are updated as needed and as such, specifications are subject to change without notice. Once printed or downloaded, datasheets are no longer controlled by Aimtec; refer to www.aimtec.com for the most current product specifications. **2.** Product labels shown, including safety agency certifications on labels, may vary based on the date manufactured. **3.** Mechanical drawings and specifications are for reference only. **4.** All specifications are measured at an ambient temperature of 25°C, humidity<75%, nominal input voltage and at rated output load unless otherwise specified. **5.** Aimtec may not have conducted destructive testing or chemical analysis on all internal components and chemicals at the time of publishing this document. CAS numbers and other limited information are considered proprietary and may not be available for release. **6.** This product is not designed for use in critical life support systems, equipment used in hazardous environments, nuclear control systems or other such applications which necessitate specific safety and regulatory standards other the ones listed in this datasheet. **7.** Warranty is in accordance with Aimtec's standard Terms of Sale available at www.aimtec.com.