Series AM15E-Z

15 Watt | DC-DC Converter



FEATURES:

- RoHS compliant
- Full SMD internal technology
- Wide 2:1 input range
- High efficiency up to 88%
- Pin compatible with multiple manufacturers
- Operating temperature -40ºC to + 85ºC
- Input/Output Isolation 1500VDC
- Continuous short circuit protection
- Low profile metal package

Models
Single output

Model	Input Voltage (V)	Output Voltage (V)	Output Current max (A)	Capacitive load, max (µF)	Efficiency (%)
AM15E-1203SZ	9-18	3.3	3	3300	80
AM15E-1205SZ	9-18	5	3	3300	82
AM15E-1207SZ	9-18	7.2	2.083	2200	83
AM15E-1209SZ	9-18	9	1.66	1000	85
AM15E-1212SZ	9-18	12	1.25	1000	85
AM15E-1215SZ	9-18	15	1	680	85
AM15E-1218SZ	9-18	18	0.833	470	85
AM15E-1224SZ	9-18	24	0.625	470	86
AM15E-2403SZ	18-36	3.3	3	3300	80
AM15E-2405SZ	18-36	5	3	3300	84
AM15E-2407SZ	18-36	7.2	2.083	2200	84
AM15E-2409SZ	18-36	9	1.66	1000	85
AM15E-2412SZ	18-36	12	1.25	1000	85
AM15E-2415SZ	18-36	15	1	680	86
AM15E-2418SZ	18-36	18	0.833	470	86
AM15E-2424SZ	18-36	24	0.625	470	87
AM15E-4803SZ	36-72	3.3	3	3300	80
AM15E-4805SZ	36-72	5	3	3300	84
AM15E-4807SZ	36-72	7.2	2.083	2200	84
AM15E-4809SZ	36-72	9	1.66	1000	85
AM15E-4812SZ	36-72	12	1.25	1000	86
AM15E-4815SZ	36-72	15	1	680	87
AM15E-4818SZ	36-72	18	0.833	470	87
AM15E-4824SZ	36-72	24	0.625	470	87

Models
Dual output

Model	Input Voltage (V)	Output Voltage (V)	Output Current max (A)	Capacitive load, max (µF)	Efficiency (%)
AM15E-1203DZ	9-18	±3.3	±1.5	±1000	80
AM15E-1205DZ	9-18	±5	±1.5	±1000	82
AM15E-1207DZ	9-18	±7.2	±1.041	±680	83
AM15E-1209DZ	9-18	±9	±0.833	±470	84
AM15E-1212DZ	9-18	±12	±0.625	±470	84
AM15E-1215DZ	9-18	±15	±0.5	±330	84
AM15E-1218DZ	9-18	±18	±0.416	±220	85
AM15E-1224DZ	9-18	±24	±0.312	±220	85
AM15E-2403DZ	18-36	±3.3	±1.5	±1000	80
AM15E-2405DZ	18-36	±5	±1.5	±1000	83
AM15E-2407DZ	18-36	±7.2	±1.041	±680	84
AM15E-2409DZ	18-36	±9	±0.833	±470	85

Models

Dual output (continued)

Model	Input Voltage (V)	Output Voltage (V)	Output Current max (A)	Capacitive load, max (µF)	Efficiency (%)
AM15E-2412DZ	18-36	±12	±0.625	±470	86
AM15E-2415DZ	18-36	±15	±0.5	±330	86
AM15E-2418DZ	18-36	±18	±0.416	±220	87
AM15E-2424DZ	18-36	±24	±0.312	±220	87
AM15E-4803DZ	36-72	±3.3	±1.5	±1000	80
AM15E-4805DZ	36-72	±5	±1.5	±1000	84
AM15E-4807DZ	36-72	±7.2	±1.041	±680	84
AM15E-4809DZ	36-72	±9	±0.833	±470	85
AM15E-4812DZ	36-72	±12	±0.625	±470	86
AM15E-4815DZ	36-72	±15	±0.5	±330	87
AM15E-4818DZ	36-72	±18	±0.416	±220	87
AM15E-4824DZ	36-72	±24	±0.312	±220	87

NOTE: All specifications in this datasheet are measured at an ambient temperature of 25°C, humidity<75%, nominal input voltage and at rated output load unless otherwise specified.

Input Specifications

Parameters	Nominal	Typical	Maximum	Units
Voltage range	12	9-18		VDC
	24	18-36		VDC
	48	36-72		VDC
Filter	π (Pi) Network			
Start up time		20		ms
Absolute Maximum Rating	12 Vin	> -0.7	25	VDC
	24 Vin	> -0.7	50	VDC
	48 Vin	> -0.7	100	VDC
Peak Input Voltage time			100	ms
Input reflected ripple current		35		mA p-p

Isolation Specifications

Parameters	Conditions	Typical	Rated	Units
Tested I/O voltage	60 sec		1500	VDC
Case to Input	60 sec	1000		VDC
Case to Output	60 sec	1000		VDC
Resistance		> 1000		MOhm
Capacitance		500		pF

Output Specifications

Parameters	Conditions	Typical	Maximum	Units
Voltage accuracy			±1	%
Short Circuit protection	Continuous			
Short circuit restart	Auto Recovery			
Over current protection		140		% of Iout
Line voltage regulation	HL-LL		±0.5	%
Load voltage regulation (Single)	0-100% load		±0.5	%
Load voltage regulation (Dual)	0-100% load		±1.0	%
Temperature coefficient		±0.02		%/°C
Ripple & Noise*	At 20MHz Bandwidth		100	mV p-p
Start up time	Nominal Vin with constant resistive load	20		ms

* Measured at 20MHz bandwidth with a 1uF ceramic capacitor.

General Specifications

Parameters	Conditions	Typical	Maximum	Units
Switching frequency	100% load	200		KHz
Operating temperature	derating above 70°C	-40 to +85		°C
Storage temperature		-40 to +125		°C
Maximum case temperature			100	°C
Derating	60 to 85°C	2.5		%/ °C
Cooling	Free air convection			
Humidity			95	%
Case material	Nickel coated copper			
Potting material	UL94V-0 rated			
Weight		31		g
Dimensions (L x W x H)	Tolerance ±0.5mm	2.00 x 1.00 x 0.40inches 50.80 x 25.40 x 10.16mm		
MTBF	> 1,121,000 hrs (MIL-HDBK -217F, Ground Benign, t=+25°C)			
Maximum soldering temperature	1.5mm from case for 10 sec		260	°C
Transient recovery time	Load step change 75% to 50% to 25%	250		µS
Transient recovery deviation	Load step change 75% to 50% to 25%		±3	%

Safety Specifications

Parameters	
Agency approvals	CE, cULus 62368-1
Standards	Design to meet IEC/EN62368-1
	EN 55032 – Class A with recommended EMC circuit
	EN 55024 – Class A
	IEC61000-4-2, Criteria A
	IEC61000-4-3, Criteria A
	IEC61000-4-4, Criteria A
	IEC61000-4-5, Criteria A (external 220uF/100V cap required)
	IEC61000-4-6, Criteria A
	IEC61000-4-8, Criteria A

Pin Out Specifications

Pin	1500VDC	
	Single	Dual
1	+V Input	+V Input
2	-V Input	-V Input
3	+V Output	+V Output
4	No Pin	Common
5	-V Output	-V Output

Dimensions:

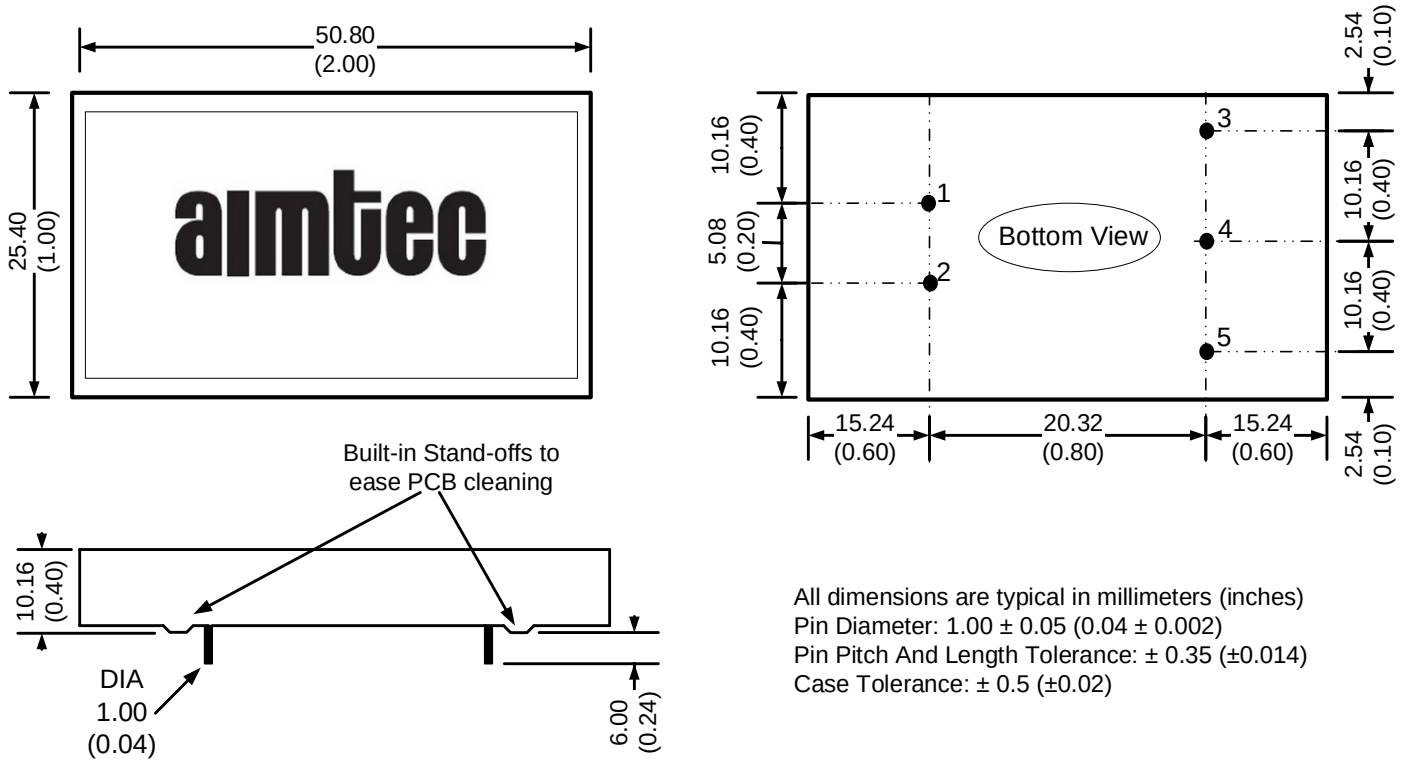

All dimensions are typical in millimeters (inches)
Pin Diameter: 1.00 ± 0.05 (0.04 ± 0.002)
Pin Pitch And Length Tolerance: ± 0.35 (±0.014)
Case Tolerance: ± 0.5 (±0.02)

Derating

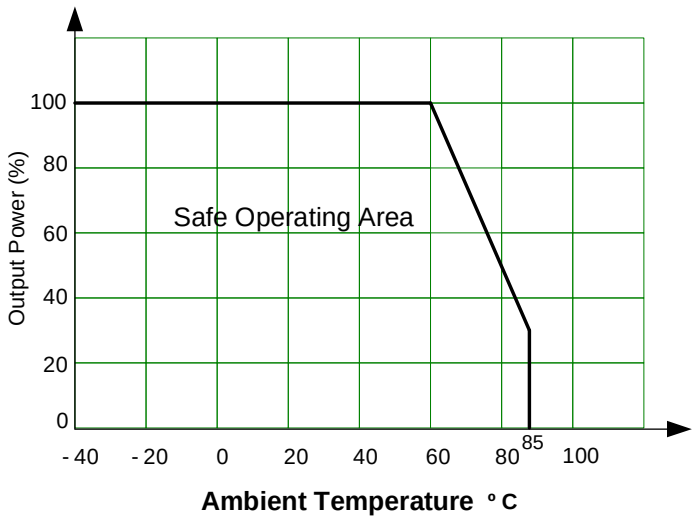

EMC recommended circuit

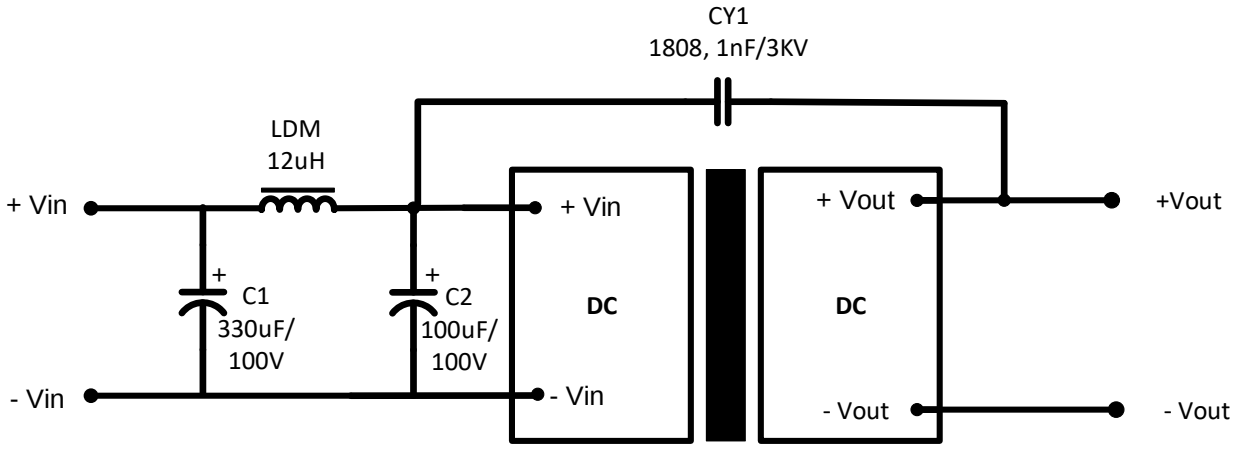

NOTE: 1. Datasheets are updated as needed and as such, specifications are subject to change without notice. Once printed or downloaded, datasheets are no longer controlled by Aimtec; refer to www.aimtec.com for the most current product specifications. **2.** Product labels shown, including safety agency certifications on labels, may vary based on the date manufactured. **3.** Mechanical drawings and specifications are for reference only. **4.** All specifications are measured at an ambient temperature of 25°C, humidity<75%, nominal input voltage and at rated output load unless otherwise specified. **5.** Aimtec may not have conducted destructive testing or chemical analysis on all internal components and chemicals at the time of publishing this document. CAS numbers and other limited information are considered proprietary and may not be available for release. **6.** This product is not designed for use in critical life support systems, equipment used in hazardous environments, nuclear control systems or other such applications which necessitate specific safety and regulatory standards other the ones listed in this datasheet. **7.** Warranty is in accordance with Aimtec's standard Terms of Sale available at www.aimtec.com.