aimtec
Your Power Partner

Series AM1DR-Z

1 Watt | DC-DC Converter



FEATURES:

- RoHS compliant
- Regulated output voltage
- Low ripple and noise
- High efficiency up to 72%
- Operating temperature -40°C to + 85°C
- Input / Output Isolation 1000 & 3000VDC
- Pin compatible with multiple manufacturers
- 7 pin SIP package

RoHS CE

Models
Single output

Model	Input Voltage (V)	Output Voltage (V)	Output Current max (mA)	Isolation (VDC)	Input Current Full Load | No Load mA		Max Capacitive Load (uF)	Efficiency (Full load) (%)
AM1DR-0503SZ	4.5-5.5	3.3	303	1000	333	23	220	60
AM1DR-0505SZ	4.5-5.5	5	200	1000	294	23	220	68
AM1DR-0507SZ	4.5-5.5	7.2	139	1000	299	25	220	67
AM1DR-0509SZ	4.5-5.5	9	111	1000	282	30	220	71
AM1DR-0512SZ	4.5-5.5	12	83	1000	286	30	220	70
AM1DR-0515SZ	4.5-5.5	15	67	1000	282	35	220	71
AM1DR-1203SZ	10.8-13.2	3.3	303	1000	153	10	220	60
AM1DR-1205SZ	10.8-13.2	5	200	1000	128	16	220	65
AM1DR-1207SZ	10.8-13.2	7.2	139	1000	124	17	220	67
AM1DR-1209SZ	10.8-13.2	9	111	1000	124	18	220	67
AM1DR-1212SZ	10.8-13.2	12	83	1000	117	18	220	71
AM1DR-1215SZ	10.8-13.2	15	67	1000	121	21	220	69
AM1DR-2403SZ	21.6-26.4	3.3	333	1000	72	7	220	64
AM1DR-2405SZ	21.6-26.4	5	200	1000	61	6	220	68
AM1DR-2407SZ	21.6-26.4	7.2	139	1000	62	7	220	67
AM1DR-2409SZ	21.6-26.4	9	111	1000	58	7	220	72
AM1DR-2412SZ	21.6-26.4	12	83	1000	60	9	220	70
AM1DR-2415SZ	21.6-26.4	15	67	1000	59	9	220	71
AM1DR-0503SH30Z	4.5-5.5	3.3	303	3000	333	23	220	60
AM1DR-0505SH30Z	4.5-5.5	5	200	3000	294	23	220	68
AM1DR-0507SH30Z	4.5-5.5	7.2	139	3000	299	25	220	67
AM1DR-0509SH30Z	4.5-5.5	9	111	3000	282	30	220	71
AM1DR-0512SH30Z	4.5-5.5	12	83	3000	286	30	220	70
AM1DR-0515SH30Z	4.5-5.5	15	67	3000	282	35	220	71
AM1DR-1203SH30Z	10.8-13.2	3.3	303	3000	153	10	220	60
AM1DR-1205SH30Z	10.8-13.2	5	200	3000	128	16	220	65
AM1DR-1207SH30Z	10.8-13.2	7.2	139	3000	124	17	220	67
AM1DR-1209SH30Z	10.8-13.2	9	111	3000	124	18	220	67
AM1DR-1212SH30Z	10.8-13.2	12	83	3000	117	18	220	71
AM1DR-1215SH30Z	10.8-13.2	15	67	3000	121	21	220	69
AM1DR-2403SH30Z	21.6-26.4	3.3	333	3000	72	7	220	64
AM1DR-2405SH30Z	21.6-26.4	5	200	3000	61	6	220	68
AM1DR-2407SH30Z	21.6-26.4	7.2	139	3000	62	7	220	67
AM1DR-2409SH30Z	21.6-26.4	9	111	3000	58	7	220	72
AM1DR-2412SH30Z	21.6-26.4	12	83	3000	60	9	220	70
AM1DR-2415SH30Z	21.6-26.4	15	67	3000	59	9	220	71

Input Specifications

Parameters	Nominal	Typical	Maximum	Units
Voltage range	5 12 24	4.5-5.5 10.8-13.2 21.6-26.4		VDC
Filter	Capacitor			
Turn on Transient process time			100	ms
Start up time		200		ms

Input Specifications (continued)

Parameters	Nominal	Typical	Maximum	Units
Absolute Maximum Rating	5 Vin 12 Vin 24 Vin	0-7 0-15 0-28		VDC
Peak Input Voltage time		100		ms

Isolation Specifications

Parameters	Conditions	Typical	Rated	Units
Tested I/O voltage	60 sec		1000 & 3000	VDC
Resistance		> 1000		MOhm
Capacitance		60		pF

Output Specifications

Parameters	Conditions	Typical	Maximum	Units
Voltage accuracy		±2		%
Line voltage regulation		±0.5		%
Load voltage regulation	0% to 100% load, Others	±0.5		%
	0% to 100% load, 3.3V Vout models	±1.0		%
Temperature coefficient		±0.02		%/ºC
Ripple & Noise	At 20MHz Bandwidth	50		mV p-p
Capacitive load			220	µF
Rising time		50		ms

General Specifications

Parameters	Conditions	Typical	Maximum	Units
Switching frequency	100% load(Variable)	50		KHz
Max Case temperature			+95	ºC
Operating temperature	Full Load without Derating	-40 to +85		ºC
Storage temperature		-55 to +125		ºC
Derating	Not Required			
Cooling	Free air convection			
Humidity			95	%
Case material	Non conductive black plastic			
Weight		2.8		g
Dimensions (L x W x H)		0.77 x 0.28 x 0.39 inch	19.50 x 7.20 x 10.00 mm	
MTBF	>3 500 000 hrs (MIL-HDBK -217F, Ground Benign, t=+25ºC)			

NOTE: All specifications in this datasheet are measured at an ambient temperature of 25°C, humidity<75%, nominal input voltage and at rated output load unless otherwise specified

Safety Specifications

Parameters	
Agency Approvals	CE
Safety Standards	EN 55032, Class B(With recommended EMC circuit) IEC61000-4-2 IEC61000-4-3 IEC61000-4-4 IEC61000-4-6 IEC61000-4-8

Typical Efficiency Example Charts

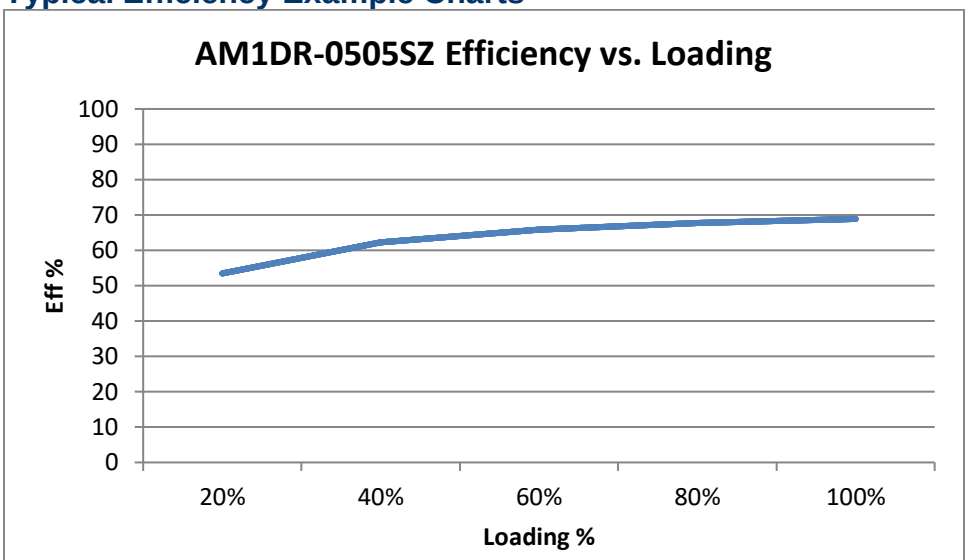

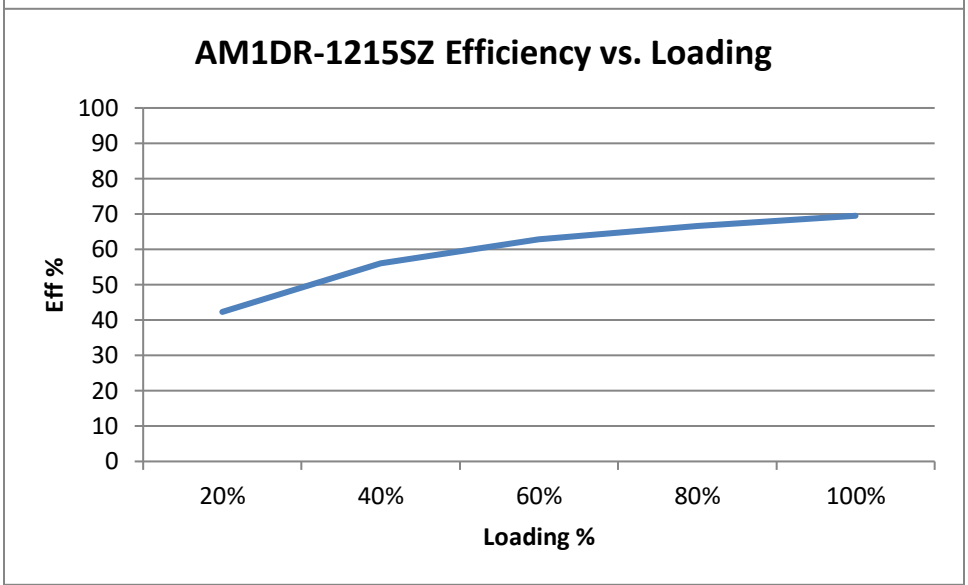

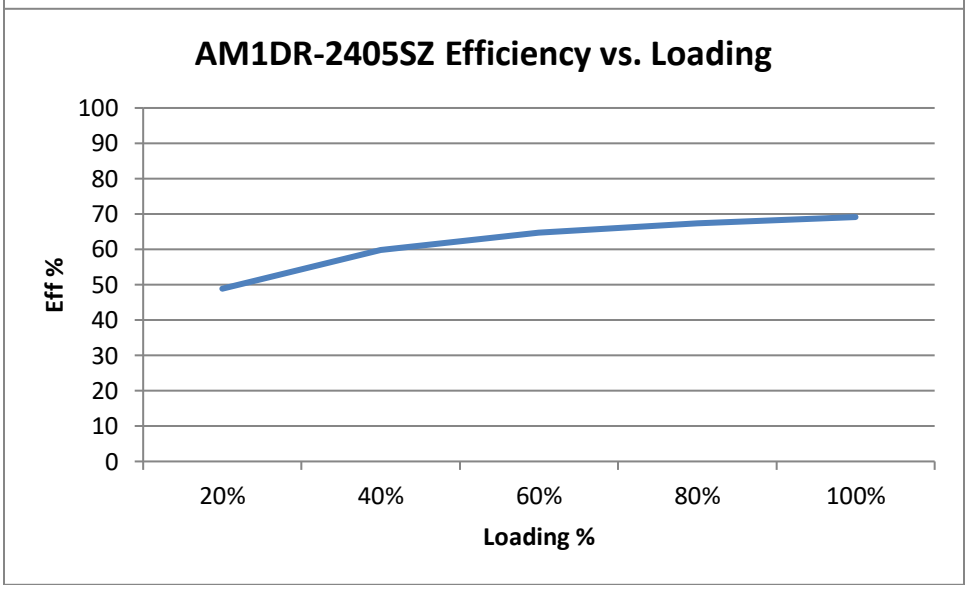

Pin Out Specifications

Pin	1000VDC	3000VDC
1	+ V Input	+ V Input
2	- V Input	- V Input
4	- V Output	No pin
5	No pin	- V Output
6	+ V Output	No pin
7	No pin	+ V Output

Dimensions

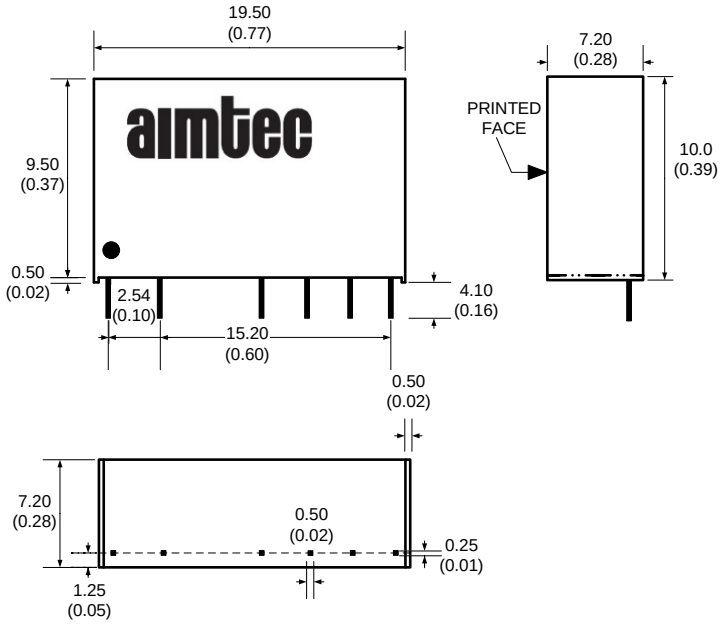

Radiated and Conducted Emissions Application circuit:

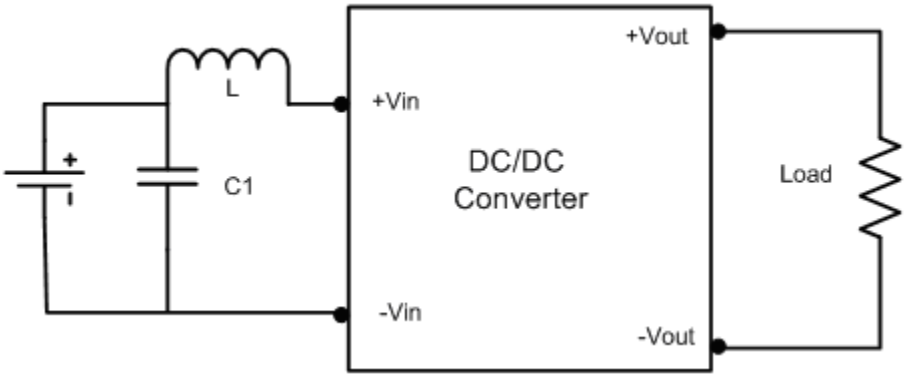

C1	L1
470µF/100V	12 µH

NOTE: 1. Datasheets are updated as needed and as such, specifications are subject to change without notice. Once printed or downloaded, datasheets are no longer controlled by Aimtec; refer to www.aimtec.com for the most current product specifications. **2.** Product labels shown, including safety agency certifications on labels, may vary based on the date manufactured. **3.** Mechanical drawings and specifications are for reference only. **4.** All specifications are measured at an ambient temperature of 25°C, humidity<75%, nominal input voltage and at rated output load unless otherwise specified. **5.** Aimtec may not have conducted destructive testing or chemical analysis on all internal components and chemicals at the time of publishing this document. CAS numbers and other limited information are considered proprietary and may not be available for release. **6.** This product is not designed for use in critical life support systems, equipment used in hazardous environments, nuclear control systems or other such applications which necessitate specific safety and regulatory standards other the ones listed in this datasheet. **7.** Warranty is in accordance with Aimtec's standard Terms of Sale available at www.aimtec.com.