aimtec
Your Power Partner

Series AM1DR-N(J)Z

1 Watt | DC-DC Converter



FEATURES:

- RoHS compliant
- Regulated output voltage
- Low ripple and noise
- High efficiency up to 74%
- Operating temperature -40°C to + 85°C
- Input / Output Isolation 1000,1500 & 3000VDC
- Pin computable with multiple manufacturers
- UL94-VO Package

Models

Single output

Model	Input Voltage (V)	Output Voltage (V)	Output Current max (mA)	Input Current Max | No Load (mA)	Isolation (VDC)	Efficiency (%)
AM1DR-0503S-NZ ※	4.75-5.25	3.3	303	333 | 30	1000	60
AM1DR-0505S-NZ	4.75-5.25	5	200	299 | 30	1000	67
AM1DR-0509S-NZ	4.75-5.25	9	111	286 | 30	1000	70
AM1DR-0512S-NZ ※	4.75-5.25	12	83	282 | 30	1000	71
AM1DR-0515S-NZ ※	4.75-5.25	15	67	274 | 30	1000	72
AM1DR-0503SJZ	4.75-5.25	3.3	250	303 | 10	1500	67
AM1DR-0505SJZ	4.75-5.25	5	200	303 | 10	1500	70
AM1DR-0509SJZ	4.75-5.25	9	111	299 | 20	1500	71
AM1DR-0512SJZ	4.75-5.25	12	84	299 | 20	1500	72
AM1DR-0515SJZ	4.75-5.25	15	67	290 | 30	1500	73
AM1DR-0524SJZ	4.75-5.25	24	41	290 | 30	1500	73
AM1DR-0524S-NZ ※	4.75-5.25	24	42	294 | 30	1000	68
AM1DR-1205S-NZ	11.4-12.6	5	200	124 | 15	1000	67
AM1DR-1209S-NZ	11.4-12.6	9	111	116 | 15	1000	72
AM1DR-1212S-NZ	11.4-12.6	12	83	119 | 15	1000	70
AM1DR-1215S-NZ	11.4-12.6	15	67	113 | 15	1000	74
AM1DR-1224S-NZ	11.4-12.6	24	42	123 | 15	1000	68
AM1DR-1505S-NZ	14.25-15.75	5	200	100 | 15	1000	67
AM1DR-1515S-NZ	14.25-15.75	15	67	93 | 15	1000	72
AM1DR-2405S-NZ	22.8-25.2	5	200	61 | 8	1000	68
AM1DR-2412S-NZ	22.8-25.2	12	83	57 | 8	1000	73
AM1DR-2415S-NZ	22.8-25.2	15	67	56 | 8	1000	75
AM1DR-0505SH30JZ	4.75-5.25	5	200	303 | 10	3000	70
AM1DR-0509SH30JZ	4.75-5.25	9	111	299 | 20	3000	71
AM1DR-0512SH30JZ	4.75-5.25	12	84	299 | 20	3000	72
AM1DR-0515SH30JZ	4.75-5.25	15	67	290 | 30	3000	73
AM1DR-0505SH30-NZ	4.75-5.25	5	200	303 | 30	3000	66
AM1DR-0512SH30-NZ ※	4.75-5.25	12	83	278 | 30	3000	72
AM1DR-0524SH30-NZ ※	4.75-5.25	24	41	274 | 30	3000	73
AM1DR-1205SH30-NZ	11.4-12.6	5	200	124 | 15	3000	67
AM1DR-1212SH30-NZ	11.4-12.6	12	83	114 | 15	3000	73
AM1DR-1215SH30-NZ	11.4-12.6	15	67	113 | 15	3000	74
AM1DR-2405SH30-NZ	22.8-25.2	5	200	62 | 8	3000	67
AM1DR-2415SH30-NZ	22.8-25.2	15	67	56 | 8	3000	74

Note: For models marked with ※ will be discontinued (EOL) by December 30, 2020; for new designs, please refer to AM1DR-JZ series.

Input Specifications

Parameters	Nominal	Typical	Maximum	Units
Voltage range	5 12 15 24	4.75-5.25 11.4-12.6 14.25-15.75 22.8-25.2		VDC
Filter		Capacitor		
No Load Input Current	AM1DR-0503SJZ	5	10	mA
	AM1DR-0505S(H30)JZ	5	10	
	AM1DR-0509S(H30)JZ	12	20	
	AM1DR-0512S(H30)JZ	12	20	
	AM1DR-0515S(H30)JZ	18	30	
	AM1DR-0524SJZ	18	30	

Isolation Specifications

Parameters	Conditions	Typical	Rated	Units
Tested I/O voltage	60 sec, <1mA		1000,1500 & 3000	VDC
Resistance		>1000		MOhm
Capacitance	100KHz/0.1V	60		pF
Capacitance (for models with suffix JZ)	100KHz/0.1V	20		pF

Output Specifications

Parameters	Conditions	Typical	Maximum	Units
Voltage accuracy			±3	%
Short Circuit protection	9, 12, 15 Vout, and models with suffix JZ	Continuous		
	5, 24 Vout	Momentary (1sec)		
Line voltage regulation	Input voltage: ±1%		±0.25	%
Load voltage regulation	10-100% for AM1DR-0503SJZ		±3	%
	10-100% for others	±1	±2	
Temperature coefficient	For models with suffix JZ	±0.02		%/°C
	Others	±0.03		
Ripple & Noise	For AM1DR-0524SJZ and SH30-NZ models	50	100	mVp-p
	For other models with suffix JZ	30	75	
	For other models with suffix NZ	50	75	

General Specifications

Parameters	Conditions	Typical	Maximum	Units
Switching frequency	100% load	120	300	KHz
	100% load, for models with suffix JZ	270		KHz
Operating temperature	Derating above 71°C	-40 to +85		°C
Storage temperature		-55 to +125		°C
Cooling	Free air convection			
Humidity			95	%RH
Case material	Plastic UL94-VO			
Weight		2.1		g
Dimensions (L x W x H)	0.77 x 0.24 x 0.4 inch 19.60 x 6.00 x 10.16 mm			
MTBF	>3,500,000 hrs (MIL-HDBK -217F, Ground Benign, t=+25°C)			

NOTE: All specifications are measured at an ambient temperature of 25°C, humidity<75%, nominal input voltage and at rated output load unless otherwise specified.

Safety Specifications

Parameters		
Agency approvals	cULus (Please refer next line for models with suffix JZ)	
Standards	UL62368 (AM1DR-0505SJZ, AM1DR-0509SJZ, AM1DR-0512SJZ, AM1DR-0515SJZ only)	
	Design to meet IEC/EN/UL62368 (AM1DR-0505SH30JZ, AM1DR-0509SH30JZ, AM1DR-0512SH30JZ, AM1DR-0515SH30JZ only)	
	Design to meet EN60950 (For models with suffix NZ only)	
	EMI - Conducted and radiated emission	CISPR32/EN55032, class B (with the recommended EMC circuit) (For models with suffix JZ only)
	Electrostatic Discharge Immunity	IEC 61000-4-2, Contact ±6kV, Air ±8kV, Criteria B (For models with suffix JZ only)

Pin Out Specification

Pin	Single 1000, 1500 & 3000VDC
1	+ V Input
2	- V Input
4	- V Output
5	No pin
6	+ V Output
7	No pin

Dimensions

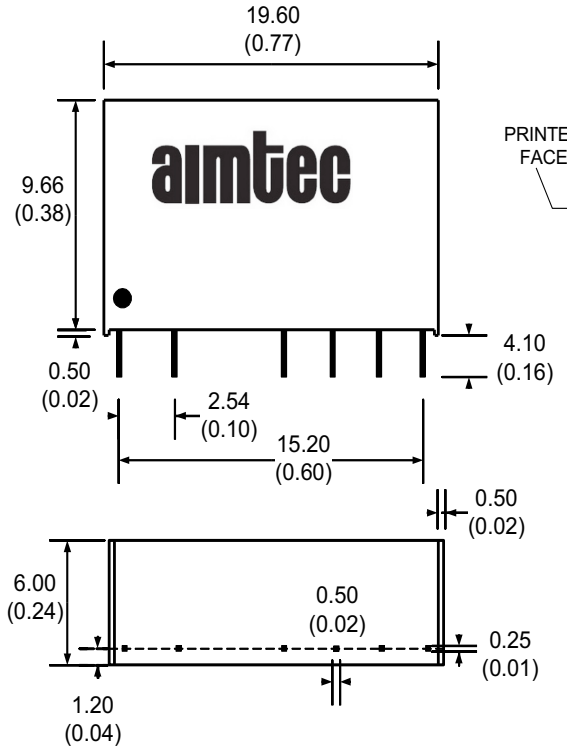

NOTE: Unit:mm [inch]
Pin tolerances: 0.10mm [0.004inch]
General tolerances: 0.25mm [0.010inch]

Ripple noise reduction circuit for models with suffix NZ

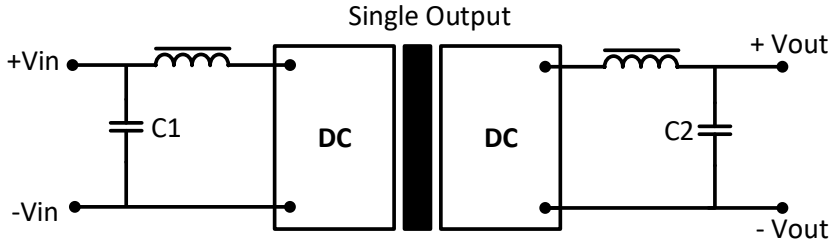

Derating

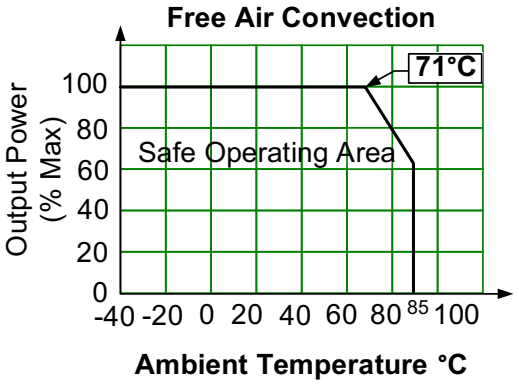

External capacitor

Vin (VDC)	C1 (uF)	Vout (VDC)	C2 (uF)
5	4.7	3.3/5	10
12/15	2.2	9	4.7
24	1	12	2.2
-	-	15	1
		24	0.47

Application circuit for models with suffix JZ:

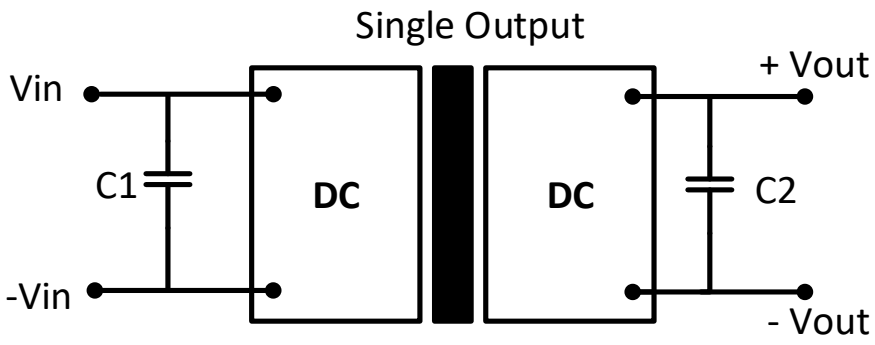

External capacitor

Vin (VDC)	C1 (uF)	Vout (VDC)	C2 (uF)
5	4.7	3.3/5	10
-	-	9/12	2.2
-	-	15	1

EMC recommended circuit for models with suffix JZ:

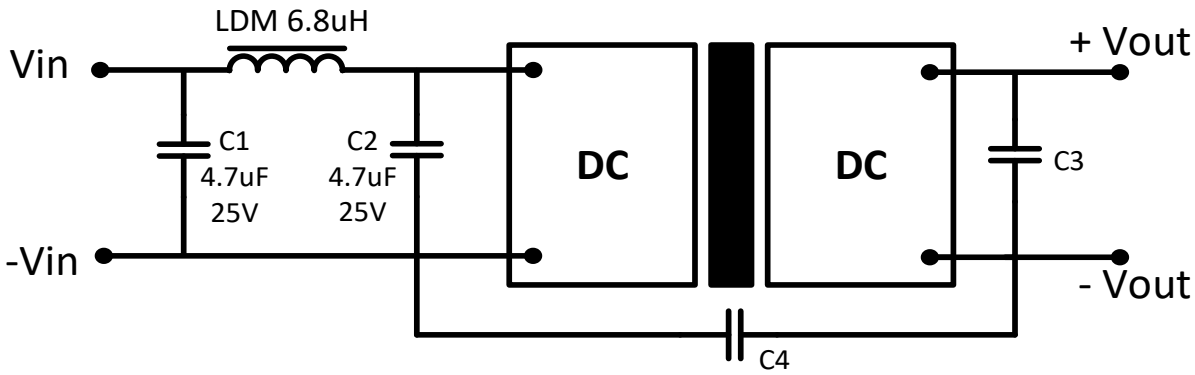

EMC Circuit External capacitor

Vout (VDC)	C3 (uF)	C4 (uF)
3.3	10	100pF/ 4KVDC Y-capacitor
5	10	
9	2.2	
12	2.2	1nF/ 4KVDC Y-capacitor
15	1	
24	1	

NOTE: 1. Datasheets are updated as needed and as such, specifications are subject to change without notice. Once printed or downloaded, datasheets are no longer controlled by Aimtec; refer to www.aimtec.com for the most current product specifications. **2.** Product labels shown, including safety agency certifications on labels, may vary based on the date manufactured. **3.**Mechanical drawings and specifications are for reference only. **4.**All specifications are measured at an ambient temperature of 25°C, humidity<75%, nominal input voltage and at rated output load unless otherwise specified. **5.**Aimtec may not have conducted destructive testing or chemical analysis on all internal components and chemicals at the time of publishing this document. CAS numbers and other limited information are considered proprietary and may not be available for release. **6.** This product is not designed for use in critical life support systems, equipment used in hazardous environments, nuclear control systems or other such applications which necessitate specific safety and regulatory standards other the ones listed in this datasheet. **7.** Warranty is in accordance with Aimtec's standard Terms of Sale available at www.aimtec.com.