AM1DS-JZ

Click to ORDER samples

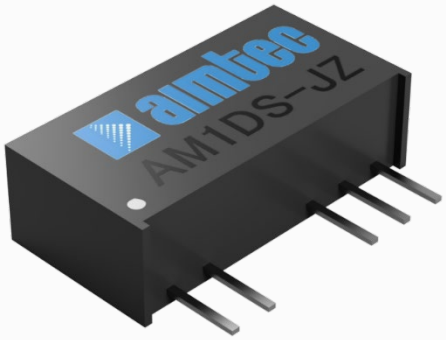

SIP7 Package

The AM1DS-JZ is a 1W SIP7 DC/DC converter that offers great cost savings thanks to an improved manufacturing process. It also features excellent reliability and performance while offering a standard input voltage range of 3.3-24VDC as well as an output voltage of 3.3-24V. This compact SIP7 design will surely benefit your new system design.

This new series offers great operating temperatures, from -40 to 105°C with full power up to 85°C. Also, an isolation of 1500 or 3000VDC for improved reliability and system safety as well as a great 3,500,000h MTBF come standard.

The AM1DS-JZ is suitable for instrumentation, industrial controls, industrial applications, communication and IoT applications.

Features

- High I/O Isolation of 1500/3000VDC
- Continuous Short circuit protection
- Operating Temp: -40 °C to +105 °C
- Industry standard SIP7 pin-out
- Efficiency up to 85%
- Unregulated output

RoHS

3yr Warranty

CE

Summary

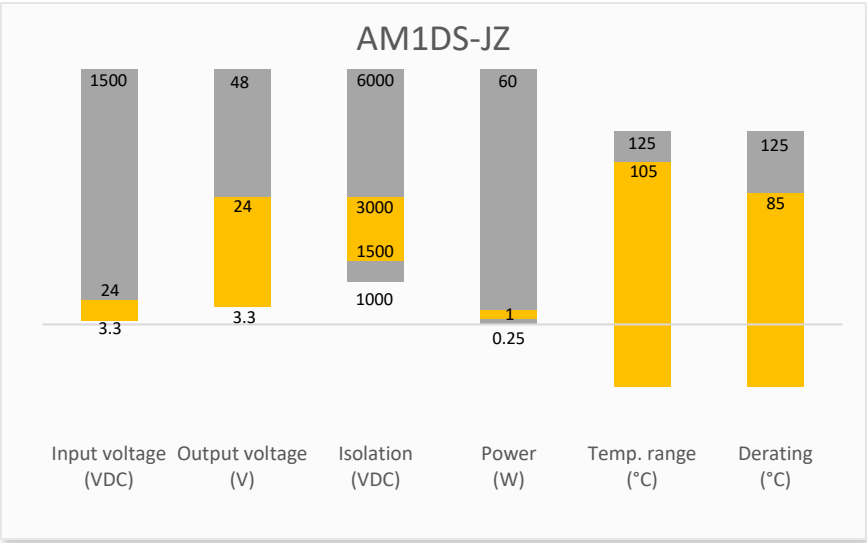

Training



Product Training Video (click to open)

Press Release

Coming Soon!

Application Notes

Applications

IoT

Industrial

Telecom

Portable Equipment

Models & Specifications

Single Output							
Model	Input Voltage (VDC)	Output Voltage (VDC)	Input Current Full | No load typ. (mA)	Output Current max | min (mA)*	Isolation (VDC)	Maximum capacitive Load (µF)	Efficiency Typ. (%)
AM1DS-0303SJZ ※❖	3.3 (2.97-3.63)	3.3	384 / 10	303 / 30	1500	2400	79
AM1DS-0305SJZ ※❖	3.3 (2.97-3.63)	5	370 / 18	200 / 20	1500	2400	82
AM1DS-0309SJZ ※❖	3.3 (2.97-3.63)	9	370 / 18	111 / 11	1500	1000	85
AM1DS-0312SJZ ※❖	3.3 (2.97-3.63)	12	370 / 18	83 / 8	1500	560	82
AM1DS-0315SJZ ※❖	3.3 (2.97-3.63)	15	370 / 18	67 / 7	1500	560	82
AM1DS-0324SJZ ※❖	3.3 (2.97-3.63)	24	370 / 18	42 / 4	1500	220	84
AM1DS-0503SJZ	5 (4.5-5.5)	3.3	270 / 5	303 / 30	1500	2400	74
AM1DS-0505SJZ	5 (4.5-5.5)	5	270 / 5	200 / 20	1500	2400	82
AM1DS-0509SJZ	5 (4.5-5.5)	9	241 / 12	111 / 12	1500	1000	83
AM1DS-0512SJZ	5 (4.5-5.5)	12	241 / 12	84 / 9	1500	560	83
AM1DS-0515SJZ	5 (4.5-5.5)	15	241 / 18	67 / 7	1500	560	83
AM1DS-0524SJZ	5 (4.5-5.5)	24	241 / 18	42 / 4	1500	220	85
AM1DS-1203SJZ	12 (10.8-13.2)	3.3	105 / 8	303 / 30	1500	2400	75
AM1DS-1205SJZ	12 (10.8-13.2)	5	105 / 8	200 / 20	1500	2400	80
AM1DS-1209SJZ	12 (10.8-13.2)	9	105 / 8	111 / 12	1500	1000	80
AM1DS-1212SJZ	12 (10.8-13.2)	12	105 / 8	83 / 9	1500	560	80
AM1DS-1215SJZ	12 (10.8-13.2)	15	105 / 8	67 / 7	1500	560	81
AM1DS-1224SJZ	12 (10.8-13.2)	24	105 / 8	42 / 4	1500	220	81
AM1DS-1505SJZ	15 (13.5-16.5)	5	84 / 8	200 / 20	1500	2400	80
AM1DS-1509SJZ	15 (13.5-16.5)	9	84 / 8	111 / 12	1500	1000	80
AM1DS-1512SJZ	15 (13.5-16.5)	12	84 / 8	83 / 9	1500	560	80
AM1DS-1515SJZ	15 (13.5-16.5)	15	84 / 8	67 / 7	1500	560	81
AM1DS-1524SJZ ※❖	15 (13.5-16.5)	24	84 / 8	42 / 5	1500	220	81
AM1DS-2403SJZ	24 (21.6-26.4)	3.3	56 / 8	303 / 30	1500	2400	75
AM1DS-2405SJZ	24 (21.6-26.4)	5	56 / 8	200 / 20	1500	2400	79
AM1DS-2407SJZ ※❖	24 (21.6-26.4)	7.2	56 / 8	139 / 13	1500	1000	80
AM1DS-2409SJZ	24 (21.6-26.4)	9	56 / 8	111 / 12	1500	1000	80
AM1DS-2412SJZ	24 (21.6-26.4)	12	56 / 8	83 / 9	1500	560	81
AM1DS-2415SJZ	24 (21.6-26.4)	15	56 / 8	67 / 7	1500	560	81
AM1DS-2424SJZ	24 (21.6-26.4)	24	56 / 8	42 / 4	1500	220	81
AM1DS-0303SH30JZ ※❖	3.3 (2.97-3.63)	3.3	384 / 10	303 / 30	3000	2400	79
AM1DS-0305SH30JZ ※❖	3.3 (2.97-3.63)	5	370 / 18	200 / 20	3000	2400	82
AM1DS-0309SH30JZ ※❖	3.3 (2.97-3.63)	9	370 / 18	111 / 11	3000	1000	85
AM1DS-0312SH30JZ ※❖	3.3 (2.97-3.63)	12	370 / 18	83 / 8	3000	560	82
AM1DS-0315SH30JZ ※❖	3.3 (2.97-3.63)	15	370 / 18	67 / 7	3000	560	82
AM1DS-0324SH30JZ ※❖	3.3 (2.97-3.63)	24	370 / 18	42 / 4	3000	220	84
AM1DS-0503SH30JZ	5 (4.5-5.5)	3.3	270 / 5	303 / 30	3000	2400	74
AM1DS-0505SH30JZ	5 (4.5-5.5)	5	270 / 5	200 / 20	3000	2400	82
AM1DS-0509SH30JZ	5 (4.5-5.5)	9	241 / 12	111 / 12	3000	1000	83
AM1DS-0512SH30JZ	5 (4.5-5.5)	12	241 / 12	84 / 9	3000	560	83
AM1DS-0515SH30JZ	5 (4.5-5.5)	15	241 / 18	67 / 7	3000	560	83

AM1DS-0524SH30JZ	5 (4.5-5.5)	24	241 / 18	42 / 4	3000	220	85
AM1DS-1203SH30JZ	12 (10.8-13.2)	3.3	112 / 8	303 / 30	3000	2400	75
AM1DS-1205SH30JZ	12 (10.8-13.2)	5	112 / 8	200 / 20	3000	2400	80
AM1DS-1209SH30JZ	12 (10.8-13.2)	9	112 / 8	111 / 12	3000	1000	80
AM1DS-1212SH30JZ	12 (10.8-13.2)	12	112 / 8	83 / 9	3000	560	80
AM1DS-1215SH30JZ	12 (10.8-13.2)	15	112 / 8	67 / 7	3000	560	81
AM1DS-1224SH30JZ	12 (10.8-13.2)	24	112 / 8	42 / 5	3000	220	81
AM1DS-1505SH30JZ	15 (13.5-16.5)	5	84 / 8	200 / 20	3000	2400	80
AM1DS-1509SH30JZ	15 (13.5-16.5)	9	84 / 8	111 / 12	3000	1000	80
AM1DS-1512SH30JZ	15 (13.5-16.5)	12	84 / 8	83 / 9	3000	560	80
AM1DS-1515SH30JZ	15 (13.5-16.5)	15	84 / 8	67 / 7	3000	560	81
AM1DS-1524SH30JZ ※ ❖	15 (13.5-16.5)	24	84 / 8	42 / 5	3000	220	81
AM1DS-2403SH30JZ	24 (21.6-26.4)	3.3	56 / 8	303 / 30	3000	2400	75
AM1DS-2405SH30JZ	24 (21.6-26.4)	5	56 / 8	200 / 20	3000	2400	79
AM1DS-2407SH30JZ ※ ❖	24 (21.6-26.4)	7.2	56 / 8	139 / 13	3000	1000	80
AM1DS-2409SH30JZ	24 (21.6-26.4)	9	56 / 8	111 / 12	3000	1000	80
AM1DS-2412SH30JZ	24 (21.6-26.4)	12	56 / 8	83 / 9	3000	560	81
AM1DS-2415SH30JZ	24 (21.6-26.4)	15	56 / 8	67 / 7	3000	560	81
AM1DS-2424SH30JZ	24 (21.6-26.4)	24	56 / 8	42 / 5	3000	220	81
* Performance will be degraded if the load is not within the output current range.							

Dual Output

Model	Input Voltage (VDC)	Output Voltage (VDC)	Input Current Full | No load typ. (mA)	Output Current max | min (mA)*	Isolation (VDC)	Maximum capacitive Load (µF)	Efficiency Typ. (%)
AM1DS-0303DJZ ※ ❖	3.3 (2.97-3.63)	±3.3	384 / 10	±152 / ±15	1500	±1200	78
AM1DS-0305DJZ ※ ❖	3.3 (2.97-3.63)	±5	370 / 18	±100 / ±10	1500	±1200	82
AM1DS-0309DJZ ※ ❖	3.3 (2.97-3.63)	±9	370 / 18	±56 / ±6	1500	±470	85
AM1DS-0312DJZ ※ ❖	3.3 (2.97-3.63)	±12	370 / 18	±42 / ±5	1500	±220	82
AM1DS-0315DJZ ※ ❖	3.3 (2.97-3.63)	±15	370 / 18	±34 / ±4	1500	±220	82
AM1DS-0324DJZ ※ ❖	3.3 (2.97-3.63)	±24	370 / 18	±21 / ±2	1500	±100	84
AM1DS-0503DJZ ※	5 (4.5-5.5)	±3.3	270 / 5	±152 / ±15	1500	±1200	74
AM1DS-0505DJZ	5 (4.5-5.5)	±5	270 / 5	±100 / ±10	1500	±1200	82
AM1DS-0509DJZ	5 (4.5-5.5)	±9	241 / 12	±56 / ±6	1500	±470	83
AM1DS-0512DJZ	5 (4.5-5.5)	±12	241 / 12	±42 / ±5	1500	±220	83
AM1DS-0515DJZ	5 (4.5-5.5)	±15	241 / 18	±34 / ±4	1500	±220	83
AM1DS-0524DJZ	5 (4.5-5.5)	±24	241 / 18	±21 / ±3	1500	±100	85
AM1DS-1203DJZ	12 (10.8-13.2)	±3.3	105 / 8	±152 / ±15	1500	±1200	75
AM1DS-1205DJZ	12 (10.8-13.2)	±5	105 / 8	±100 / ±10	1500	±1200	80
AM1DS-1209DJZ ※ ❖	12 (10.8-13.2)	±9	105 / 8	±56 / ±5	1500	±470	80
AM1DS-1212DJZ	12 (10.8-13.2)	±12	105 / 8	±42 / ±5	1500	±220	81
AM1DS-1215DJZ	12 (10.8-13.2)	±15	105 / 8	±34 / ±4	1500	±220	81
AM1DS-1224DJZ	12 (10.8-13.2)	±24	105 / 8	±21 / ±3	1500	±100	80
AM1DS-1505DJZ	15 (13.5-16.5)	±5	84 / 8	±100 / ±10	1500	±1200	80
AM1DS-1509DJZ ※ ❖	15 (13.5-16.5)	±9	84 / 8	±56 / ±5	1500	±470	80
AM1DS-1512DJZ	15 (13.5-16.5)	±12	84 / 8	±42 / ±5	1500	±220	80
AM1DS-1515DJZ	15 (13.5-16.5)	±15	84 / 8	±34 / ±4	1500	±220	81
AM1DS-1524DJZ ※ ❖	15 (13.5-16.5)	±24	84 / 8	±21 / ±2	1500	±100	81
AM1DS-2405DJZ	24 (21.6-26.4)	±5	56 / 8	±100 / ±10	1500	±1200	80

AM1DS-2409DJZ ※ ❖	24 (21.6-26.4)	±9	56 / 8	±56 / ±5	1500	±470	80
AM1DS-2412DJZ	24 (21.6-26.4)	±12	56 / 8	±42 / ±5	1500	±220	81
AM1DS-2415DJZ	24 (21.6-26.4)	±15	56 / 8	±34 / ±4	1500	±220	79
AM1DS-2424DJZ	24 (21.6-26.4)	±24	56 / 8	±21 / ±3	1500	±100	80
AM1DS-0303DH30JZ ※ ❖	3.3 (2.97-3.63)	±3.3	384 / 10	±150 / ±15	3000	±1200	78
AM1DS-0305DH30JZ ※ ❖	3.3 (2.97-3.63)	±5	370 / 18	±100 / ±10	3000	±1200	82
AM1DS-0309DH30JZ ※ ❖	3.3 (2.97-3.63)	±9	370 / 18	±56 / ±6	3000	±470	85
AM1DS-0312DH30JZ ※ ❖	3.3 (2.97-3.63)	±12	370 / 18	±42 / ±5	3000	±220	82
AM1DS-0315DH30JZ ※ ❖	3.3 (2.97-3.63)	±15	370 / 18	±34 / ±4	3000	±220	82
AM1DS-0324DH30JZ ※ ❖	3.3 (2.97-3.63)	±24	370 / 18	±21 / ±2	3000	±100	84
AM1DS-0503DH30JZ ※	5 (4.5-5.5)	±3.3	270 / 5	±152 / ±15	3000	±1200	74
AM1DS-0505DH30JZ	5 (4.5-5.5)	±5	270 / 5	±100 / ±10	3000	±1200	82
AM1DS-0509DH30JZ	5 (4.5-5.5)	±9	241 / 12	±56 / ±6	3000	±470	83
AM1DS-0512DH30JZ	5 (4.5-5.5)	±12	241 / 12	±42 / ±5	3000	±220	83
AM1DS-0515DH30JZ	5 (4.5-5.5)	±15	241 / 18	±34 / ±4	3000	±220	83
AM1DS-0524DH30JZ	5 (4.5-5.5)	±24	241 / 18	±21 / ±3	3000	±100	85
AM1DS-1203DH30JZ	12 (10.8-13.2)	±3.3	112 / 8	±152 / ±15	3000	±1200	75
AM1DS-1205DH30JZ	12 (10.8-13.2)	±5	112 / 8	±100 / ±10	3000	±1200	80
AM1DS-1209DH30JZ ※ ❖	12 (10.8-13.2)	±9	112 / 8	±56 / ±5	3000	±470	80
AM1DS-1212DH30JZ	12 (10.8-13.2)	±12	112 / 8	±42 / ±5	3000	±220	81
AM1DS-1215DH30JZ	12 (10.8-13.2)	±15	112 / 8	±34 / ±4	3000	±220	81
AM1DS-1224DH30JZ	12 (10.8-13.2)	±24	112 / 8	±21 / ±2	3000	±100	80
AM1DS-1505DH30JZ	15 (13.5-16.5)	±5	84 / 8	±100 / ±10	3000	±1200	80
AM1DS-1509DH30JZ ※ ❖	15 (13.5-16.5)	±9	84 / 8	±56 / ±5	3000	±470	80
AM1DS-1512DH30JZ	15 (13.5-16.5)	±12	84 / 8	±42 / ±5	3000	±220	80
AM1DS-1515DH30JZ	15 (13.5-16.5)	±15	84 / 8	±34 / ±4	3000	±220	81
AM1DS-1524DH30JZ ※ ❖	15 (13.5-16.5)	±24	84 / 8	±21 / ±2	3000	±100	81
AM1DS-2403DH30JZ ※ ❖	24 (21.6-26.4)	±3.3	56 / 8	±150 / ±15	3000	±1200	76
AM1DS-2405DH30JZ	24 (21.6-26.4)	±5	56 / 8	±100 / ±10	3000	±1200	80
AM1DS-2409DH30JZ ※ ❖	24 (21.6-26.4)	±9	56 / 8	±56 / ±5	3000	±470	80
AM1DS-2412DH30JZ	24 (21.6-26.4)	±12	56 / 8	±42 / ±5	3000	±220	81
AM1DS-2415DH30JZ	24 (21.6-26.4)	±15	56 / 8	±34 / ±4	3000	±220	79
AM1DS-2424DH30JZ	24 (21.6-26.4)	±24	56 / 8	±21 / ±2	3000	±100	80

*** Performance will be degraded if the load is not within the output current range.**

Input Specification

Parameters	Conditions	Typical	Maximum	Units
Filter	Capacitor			
Absolute maximum rating	Maximum duration 1s, 3.3Vin	> -0.7	5	VDC
	Maximum duration 1s, 5Vin	> -0.7	9	VDC
	Maximum duration 1s, 12Vin	> -0.7	18	VDC
	Maximum duration 1s, 15Vin	> -0.7	21	VDC
	Maximum duration 1s, 24Vin	> -0.7	30	VDC
Input reflected ripple current		15		mA

Isolation Specification

Parameters	Conditions	Typical	Maximum	Units
Tested I/O voltage	60 sec, leakage ≤ 1mA	>1500		VDC
	60 sec, leakage ≤ 1mA for H30 models	>3000		VDC
Resistance	500VDC	>1000		MΩ
Capacitance	100kHz/0.1V	20		pF

Output Specification

Parameters	Conditions	Typical	Maximum	Units
Voltage accuracy	See output voltage tolerance	10	14	%
Line regulation	Per 1% Vin change, 3.3Vout models		±1.5	%
	Per 1% Vin change, other models		±1.2	%
Load regulation	10-100% load, other 3.3Vout models		20	%
	10-100% load, 3.3Vin, 3.3Vout models		18	%
	10-100% load, other 5Vout & 3.3Vin other models		15	%
	10-100% load, other models		10	%
Ripple & Noise*	24Vout models	50	100	mV pk-pk
	other models	30	75	mV pk-pk
Temperature coefficient	Full load	±0.02		%/°C

* Ripple and Noise are measured at 20MHz bandwidth. Please refer to the application note for specific details.

General Specifications

Parameters	Conditions	Typical	Maximum	Units
Switching frequency	Full load, nominal input, 3.3Vin models	220		KHz
	Full load, nominal input, 5Vin models	270		KHz
	Full load, nominal input, other models	260		KHz
Short circuit protection	Continuous, Auto recovery			
Operating temperature	With derating	-40 to +105		°C
Storage temperature		-55 to +125		°C
Case temperature rise	Ambient temperature at 25°C, 3.3Vin & 5Vin, 3.3Vout & other models	25		°C
	Ambient temperature at 25°C, 3.3Vin & 5Vin, other models	15		°C
Manual soldering temperature	1.5mm away from case, duration ≤ 10sec		300	°C
Cooling	Free air convection			
Humidity	Non-condensing	>5	95	% RH
Vibration	10-150Hz, 5G, 30Min, along all axis, 12/15/24Vin models only			
Case material	Black plastic (flammability to UL 94V-0)			
Weight		2.1		g
Dimensions (L x W x H)	0.77 x 0.24 x 0.40 inches (19.65 x 6.00 x 10.16 mm)			
MTBF	3 500 000 hrs (MIL-HDBK -217F, t=+25°C) / Full Load			

NOTE: All specifications in this datasheet are measured at an ambient temperature of 25°C, humidity<75%, nominal input voltage and at rated output load unless otherwise specified.

Safety Specifications		
Parameters		
Agency approvals	CE EN62368-1(With exception of models marked with ❖)	
Standards	Information technology Equipment	Design to meet IEC/EN/Designed to meet UL62368-1 (With exception of models marked with ※)
	EMC - Conducted and radiated emission	CISPR32 / EN55032, class B with the recommended EMI circuit
	Electrostatic Discharge Immunity	IEC 61000-4-2 Air ±8KV, Contact ±4KV, Criteria B for 5Vin models
		IEC 61000-4-2 Air ±8KV, Contact ±6KV, Criteria B for 3.3/12/15/24Vin models

Derating

5Vin models

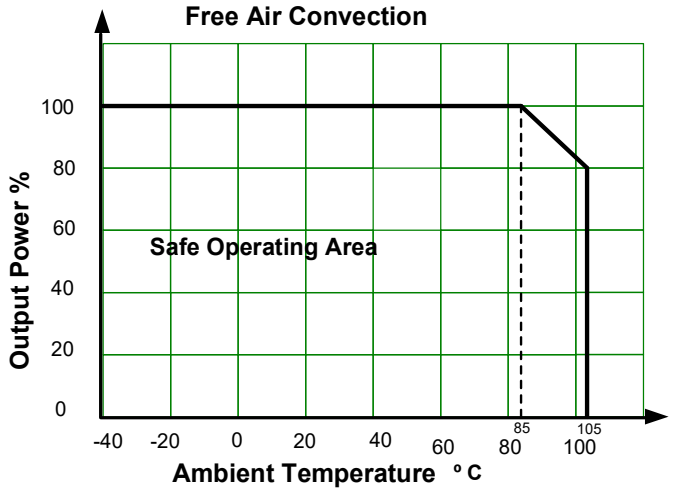

3.3/12/15/24Vin models

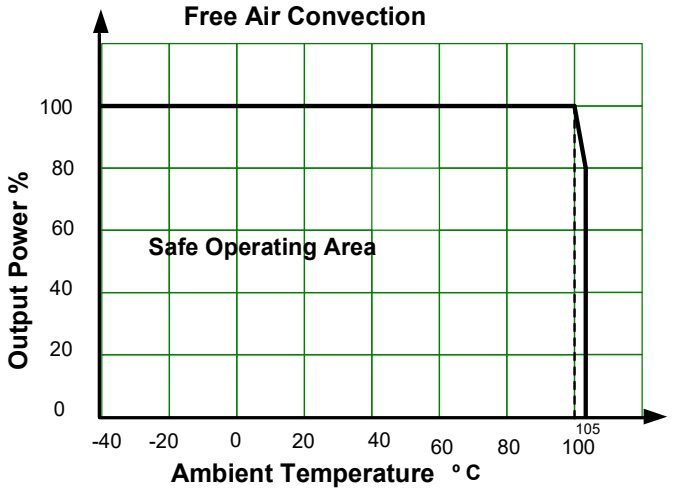

Output voltage tolerance

All 3.3Vout models

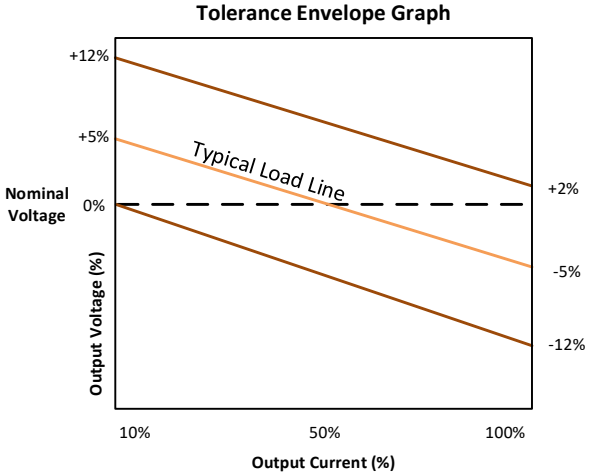

3.3/5Vin, 5/9/12/15/24Vout models

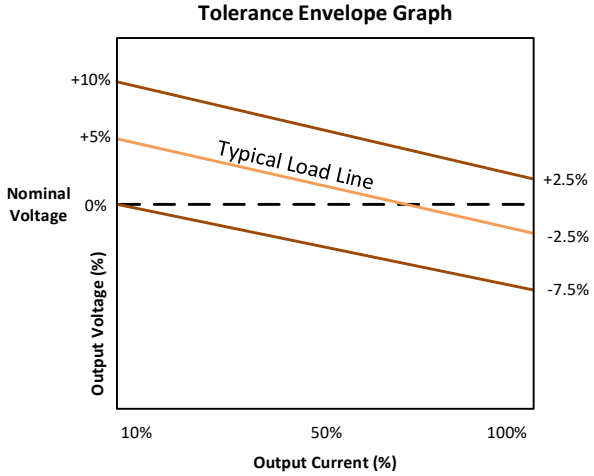

Other models

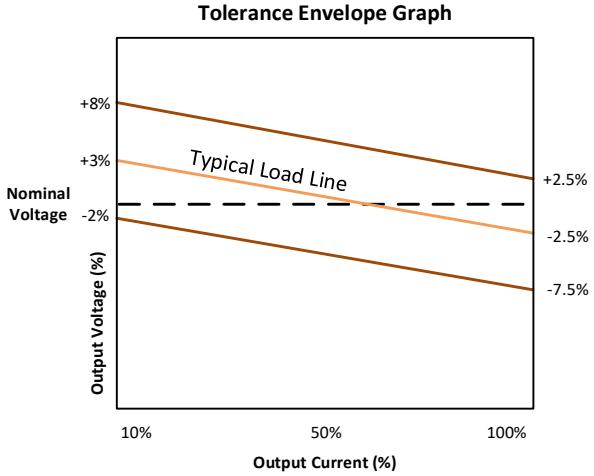

Typical application circuit

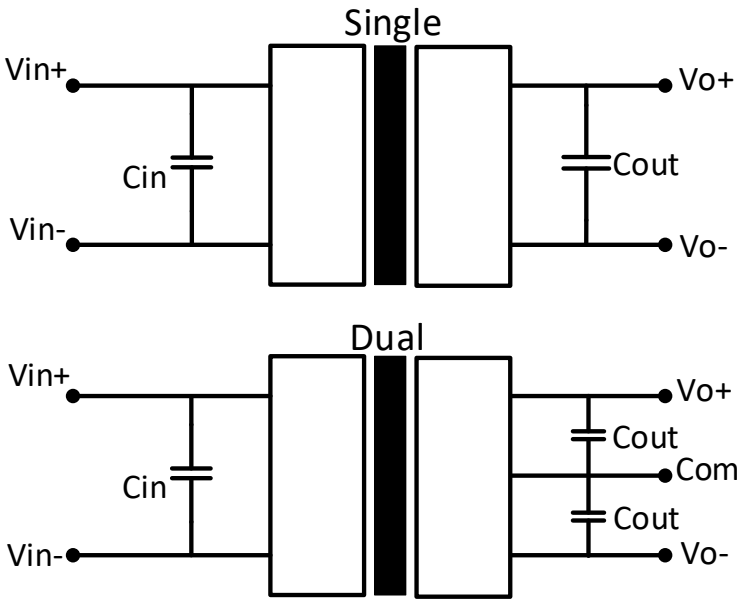

Vin	Cin
3.3V	10μF/16V
5V	4.7μF
12/15V	2.2μF/25V
24V	1μF/50V

3.3Vin single output models		3.3Vin dual output models	
Vout	Cout	Vout	Cout
3.3/5V	10μF/16V	±3.3/±5V	10μF/16V
9/12V	2.2μF/25V	±9/±12V	2.2μF/25V
15/24V	1μF/50V	±15/±24V	1μF/50V

Other single output models		Other dual output models	
Vout	Cout	Vout	Cout
3.3/5V	10μF/16V	±3.3/±5V	4.7μF/16V
7.2/9V	2.2μF/16V	±9V	1μF/16V
12V	2.2μF/25V	±12V	1μF/25V
15V	1μF/25V	±15V	0.47μF/25V
24V	1μF/50V	±24V	0.47μF/50V

Recommended EMI circuit

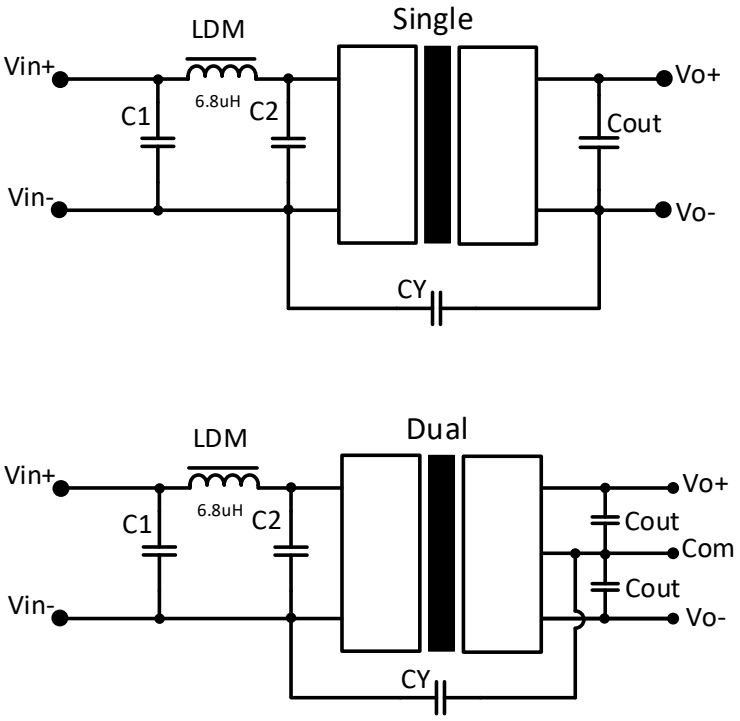

3.3Vin models		
Vout	C1/C2	CY
3.3/5V	4.7μF/16V	-
9/12/15/24V	4.7μF/16V	270pF/4kVdc

5Vin models		
Vout	C1/C2	CY
3.3/5/9V	4.7μF/25V	-
12/15/24V	4.7μF/25V	1nF/4kVdc

12/15/24Vin models		
Isolation	C1/C2	CY
1.5KV	4.7μF/50V	270pF/2kVdc
3KV	4.7μF/50V	270pF/3kVdc

Dimensions

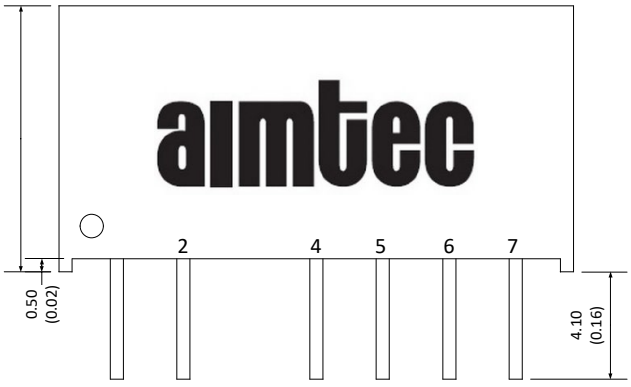

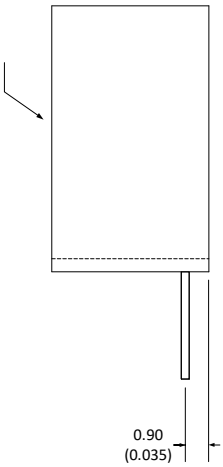

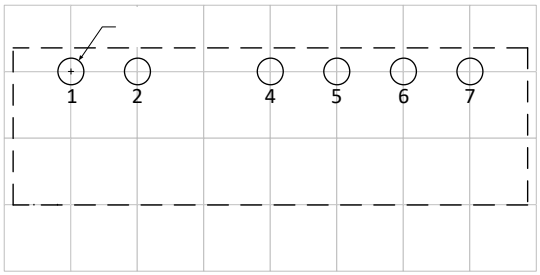

Grid size: 2.54*2.54mm

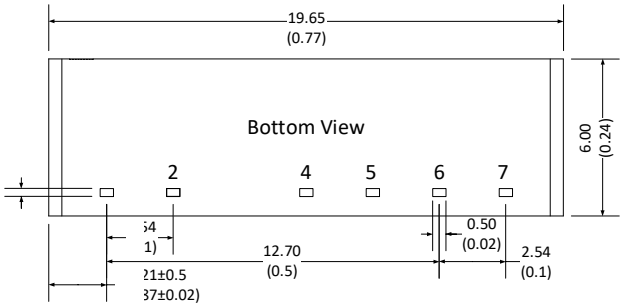

Note:
Unit: mm(inch)
General tolerance: ±0.25 (0.01)
Pin tolerance: ±0.1 (0.004)

Pin Out Specifications				
Pin	1.5KV isolation Single output	1.5KV isolation Dual output	3KV isolation Single output	3KV isolation Dual output
1	+V Input	+V Input	+V Input	+V Input
2	-V Input	-V Input	-V Input	-V Input
4	-V Output	-V Output	No pin	No pin
5	No pin	Com	-V Output	-V Output
6	+V Output	+V Output	No pin	Com
7	No pin	No pin	+V Output	+V Output

NOTE: 1. Datasheets are updated as needed and as such, specifications are subject to change without notice. Once printed or downloaded, datasheets are no longer controlled by Aimtec; refer to www.aimtec.com for the most current product specifications. **2.** Product labels shown, including safety agency certifications on labels, may vary based on the date manufactured. **3.** Mechanical drawings and specifications are for reference only. **4.** All specifications are measured at an ambient temperature of 25°C, humidity<75%, nominal input voltage and at rated output load unless otherwise specified. **5.** Aimtec may not have conducted destructive testing or chemical analysis on all internal components and chemicals at the time of publishing this document. CAS numbers and other limited information are considered proprietary and may not be available for release. **6.** This product is not designed for use in critical life support systems, equipment used in hazardous environments, nuclear control systems or other such applications which necessitate specific safety and regulatory standards other the ones listed in this datasheet. **7.** Warranty is in accordance with Aimtec's standard Terms of Sale available at www.aimtec.com.