Click to ORDER samples

AM1G-LPZ

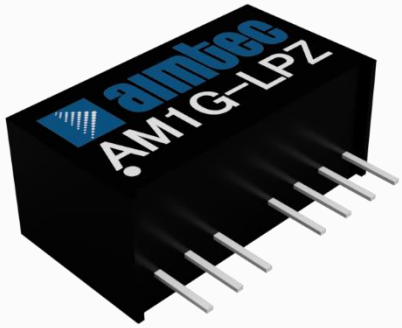

SIP8 Package

The AM1G-LPZ is a 1W SIP8 DC/DC converter that offers great cost savings thanks to an improved manufacturing process. It also features excellent reliability and performance while offering a wide input voltage range of 4.5-75VDC as well as an output voltage of -15 to 24V. This compact SIP8 design will surely benefit your new system design.

This new series offers a great operating temperature range from -40 to 85°C. Also, an isolation of 1500VDC for improved reliability and system safety as well as a great 1,000,000h MTBF come standard.

The AM1G-LPZ is suitable for many applications such as industrial systems, portable equipment, and internet of things.

Features

- High I/O Isolation of 1500VDC
- Continuous Short circuit protection
- Operating Temp: -40 °C to +85 °C
- Industry standard SIP8 pin-out
- Regulated output

RoHS 3yr Warranty CE

Summary

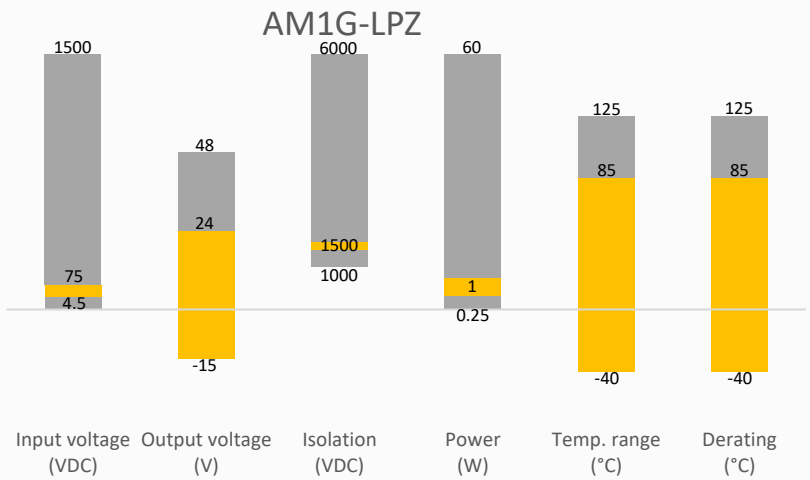

Training

Product Training Video (click to open)

Press Release

Coming Soon!

Application Notes

Applications

Industrial

Portable Equipment

IoT

Models & Specifications

Single Output						
Model	Input Voltage (VDC)	Output Voltage (VDC)	Output Current Max/Min (mA)	Isolation (VDC)	Maximum Capacitive Load (µF)	Efficiency Typ. (%)
AM1G-0503SLPZ	5 (4.5-9)	3.3	303/15	1500	1800	71
AM1G-0505SLPZ	5 (4.5-9)	5	200/15	1500	2200	72
AM1G-0512SLPZ	5 (4.5-9)	12	83/4	1500	680	76
AM1G-0515SLPZ	5 (4.5-9)	15	67/3	1500	470	75
AM1G-0524SLPZ	5 (4.5-9)	24	42/2	1500	330	73
AM1G-1203SLPZ	12 (9-18)	3.3	303/15	1500	2700	75
AM1G-1205SLPZ	12 (9-18)	5	200/10	1500	2200	77
AM1G-1209SLPZ	12 (9-18)	9	111/6	1500	1000	79
AM1G-1212SLPZ	12 (9-18)	12	83/4	1500	680	78
AM1G-1215SLPZ	12 (9-18)	15	67/3	1500	470	80
AM1G-1224SLPZ	12 (9-18)	24	42/2	1500	330	76
AM1G-2403SLPZ	24 (18-36)	3.3	303/15	1500	2700	75
AM1G-2405SLPZ	24 (18-36)	5	200/10	1500	2200	77
AM1G-2412SLPZ	24 (18-36)	12	83/4	1500	680	78
AM1G-2415SLPZ	24 (18-36)	15	67/3	1500	470	78
AM1G-2424SLPZ	24 (18-36)	24	42/2	1500	330	77
AM1G-4803SLPZ	48 (36-75)	3.3	303/15	1500	2700	75
AM1G-4805SLPZ	48 (36-75)	5	200/10	1500	2200	76
AM1G-4812SLPZ	48 (36-75)	12	83/4	1500	680	80
AM1G-4815SLPZ	48 (36-75)	15	67/3	1500	470	79

Dual Output						
Model	Input Voltage (VDC)	Output Voltage (VDC)	Output Current Max/Min (mA)	Isolation (VDC)	Maximum Capacitive Load (µF)	Efficiency Typ. (%)
AM1G-0505DLPZ	5 (4.5-9)	±5	±100/±5	1500	±1000	73
AM1G-0512DLPZ	5 (4.5-9)	±12	±42/±2	1500	±470	76
AM1G-0515DLPZ	5 (4.5-9)	±15	±33/±2	1500	±330	75
AM1G-1205DLPZ	12 (9-18)	±5	±100/±5	1500	±1000	77
AM1G-1212DLPZ	12 (9-18)	±12	±42/±2	1500	±470	81
AM1G-1215DLPZ	12 (9-18)	±15	±33/±2	1500	±330	78
AM1G-2405DLPZ	24 (18-36)	±5	±100/±5	1500	±1000	79
AM1G-2412DLPZ	24 (18-36)	±12	±42/±2	1500	±470	78
AM1G-2415DLPZ	24 (18-36)	±15	±33/±2	1500	±330	78
AM1G-4805DLPZ	48 (36-75)	±5	±100/±5	1500	±1000	76
AM1G-4812DLPZ	48 (36-75)	±12	±42/±2	1500	±470	78
AM1G-4815DLPZ	48 (36-75)	±15	±33/±2	1500	±330	80

Input Specification				
Parameters	Conditions	Typical	Maximum	Units
Input current	5Vin	281		mA
	12Vin	111		mA

	24Vin	55		mA
	48Vin	27		mA
Filter	Capacitor			
Voltage Types	Vo, Io Nom		2:1	
Maximum Rating	5Vin	> -0.7	12	VDC
	12Vin	> -0.7	25	VDC
	24Vin	> -0.7	50	VDC
	48Vin	> -0.7	100	VDC
Peak Input Voltage Time			1	Sec
No load input current	5Vin	40	60	mA
	12Vin	15	30	mA
	24Vin	6	10	mA
	48Vin	4	6	mA
Startup input voltage	5Vin		4.5	VDC
	12Vin		9	VDC
	24Vin		18	VDC
	48Vin		36	VDC
Input Reflected Ripple Current	5Vin	40		mA
	12Vin	40		mA
	24Vin	55		mA
	48Vin	55		mA
On/Off Control	ON – open or logic high, positive logic	>3.5	12	VDC
	OFF – grounded or logic low, positive logic	>0	0.7	VDC
	Control pin current, positive logic	5	10	mA

Isolation Specification

Parameters	Conditions	Typical	Maximum	Units
Tested I/O voltage	60 sec, leakage ≤ 1mA, other models	1500		VDC
Resistance	500VDC	>1000		MΩ
Capacitance	100KHz, 0.1V	120		pF

Output Specification

Parameters	Conditions	Typical	Maximum	Units
Voltage Tolerance	100% Full Load, 3.3Vout and 5Vout model	±2	±5	%
	100% Full Load, others	±1	±3	%
Line Regulation	Full load	±0.2	±0.5	%
Load regulation	25% load step	±0.5	±1	%
Temperature coefficient		±0.02	±0.03	%/°C
Transient Recovery Time	25% load step	0.5	2	mS
Transient Response Deviation	25% load step	±2.5	±5	%
Ripple & Noise*		80	150	mV p-p

* Ripple and Noise are measured at 20MHz bandwidth. Please refer to the application note for specific details.

General Specifications

Parameters	Conditions	Typical	Maximum	Units
Switching frequency	100% load	250		KHz
Short circuit protection	Continuous, auto-recovery			
Operating temperature		-40 to +85		°C
Storage temperature		-55 to +125		°C

Lead Temperature	1.5mm from case for 10 seconds		300	°C
Cooling	Free air convection			
Humidity	Non-condensing	>5	95	% RH
Case material	Plastic (UL94V-0)			
Weight		4		g
Dimensions (L x W x H)	0.87 x 0.37 x 0.47 inches (22.00 x 9.50 x 12.00 mm)			
MTBF	1 000 000 hrs (MIL-HDBK -217F, t=+25°C) / Full Load			
NOTE: All specifications in this datasheet are measured at an ambient temperature of 25°C, humidity<75%, nominal input voltage and at rated output load unless otherwise specified.				

Safety Specifications

Parameters		
Standards	Designed to meet UL/EN/IEC 62368-1	
	EMI - Conducted and radiated emission	CISPR32/EN55032 Class B with EMI recommended circuit
	Electrostatic Discharge Immunity	IEC/EN 61000-4-2, Contact ±4KVperf. Criteria B
	RF, Electromagnetic Field Immunity	IEC/EN 61000-4-3, 10V/m, Criteria A
	Electrical Fast Transient/Burst Immunity	IEC/EN 61000-4-4, ±2KV with recommended EMC circuit, Criteria B
	Surge Immunity	IEC/EN 61000-4-5, L-L ±2KV, Criteria B
	RF, Conducted Disturbance Immunity	IEC/EN 61000-4-6, 3 Vr.m.s, Criteria A
	Voltage dips, Short Interruptions & Voltage variations Immunity	IEC/EN 61000-4-29, 0-70%, Criteria B

Derating

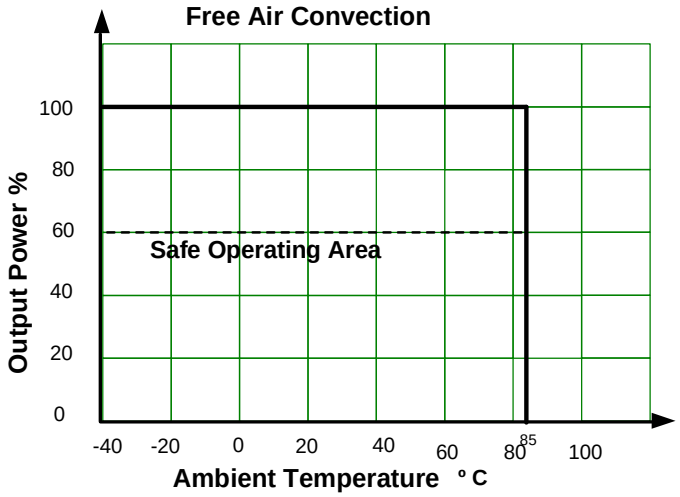

Typical application circuit

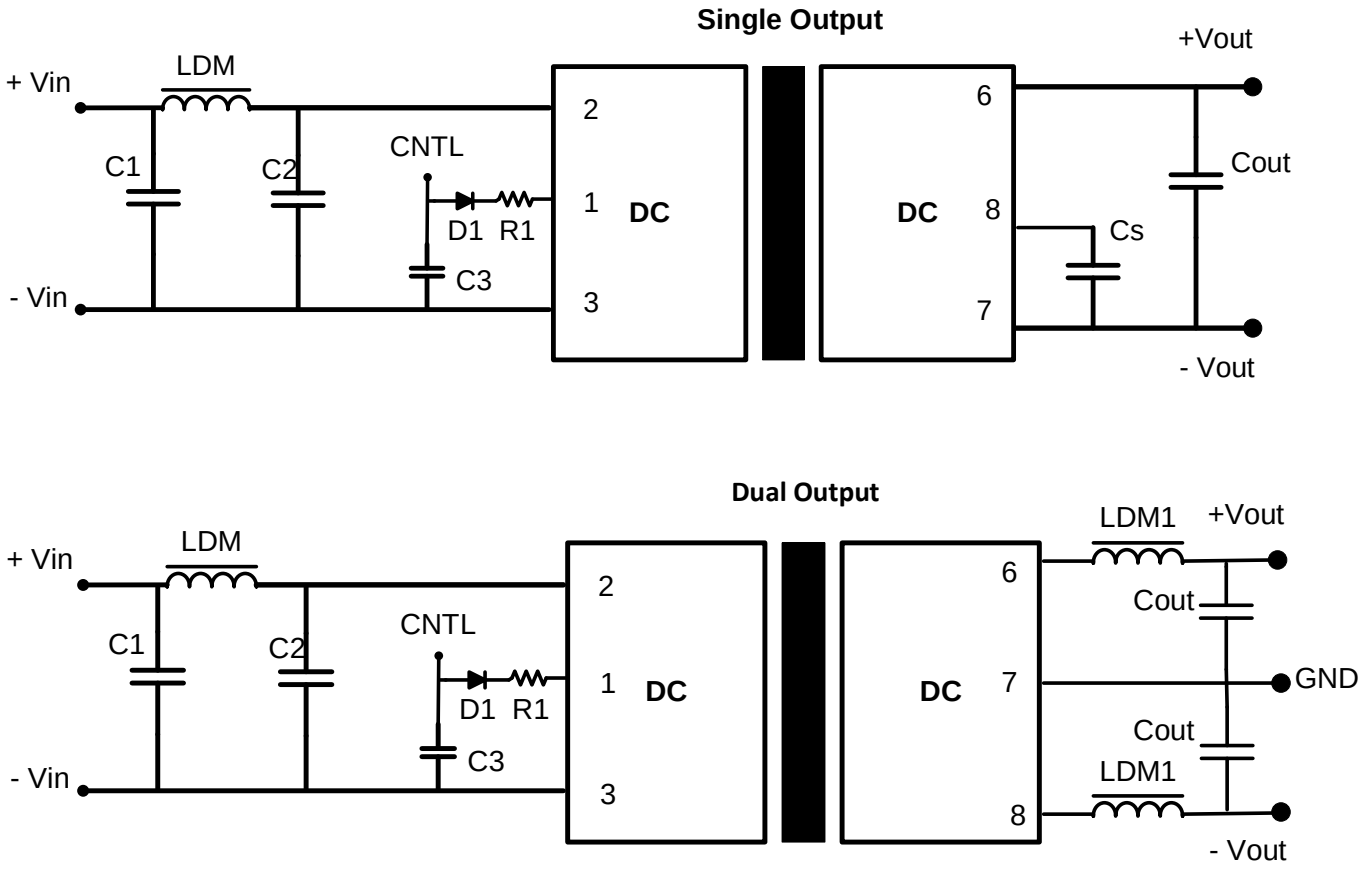

Model	C1	C2	Cout	C3	Cs	LDM	LDM1	D1	R1
5Vin	100µF	47µF	100µF	47nF/100V	10µF~22µF	47µH~12µH	2.2µH~10µH	60V, 1A	See formula
12Vin	100µF	47µF	100µF	47nF/100V	10µF~22µF	47µH~12µH	2.2µH~10µH	60V, 1A	See formula
24Vin	10µF	1µF	100µF	47nF/100V	10µF~22µF	47µH~12µH	2.2µH~10µH	60V, 1A	See formula
48Vin	10µF	1µF	100µF	47nF/100V	10µF~22µF	47µH~12µH	2.2µH~10µH	60V, 1A	See formula

EMI recommended circuit

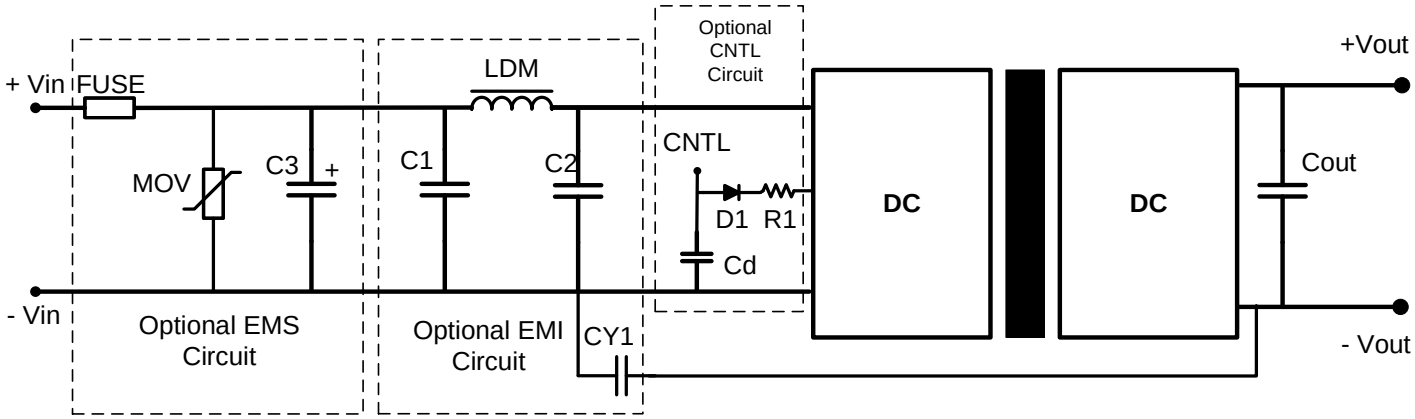

Model	C3	C1, C2	Cd	CY1	D1	LDM	MOV	R1	Cout
5Vin	1000µF, 16V	4.7µF, 50V	47nF/100V	1nF/2000V	60V, 1A	12µH	-	See formula	100µF
12Vin	1000µF, 25V	4.7µF, 50V	47nF/100V	1nF/2000V	60V, 1A	12µH	S14K25	See formula	100µF
24Vin	330µF, 50V	4.7µF, 50V	47nF/100V	1nF/2000V	60V, 1A	12µH	S14K35	See formula	100µF
48Vin	330µF, 100V	4.7µF, 100V	47nF/100V	1nF/2000V	60V, 1A	12µH	S14K60	See formula	100µF

Note: Fuse is user selectable, slow blow type
R1 = ((Vcd – Vd1 – 1.0) / Icntl) - 300

Dimensions

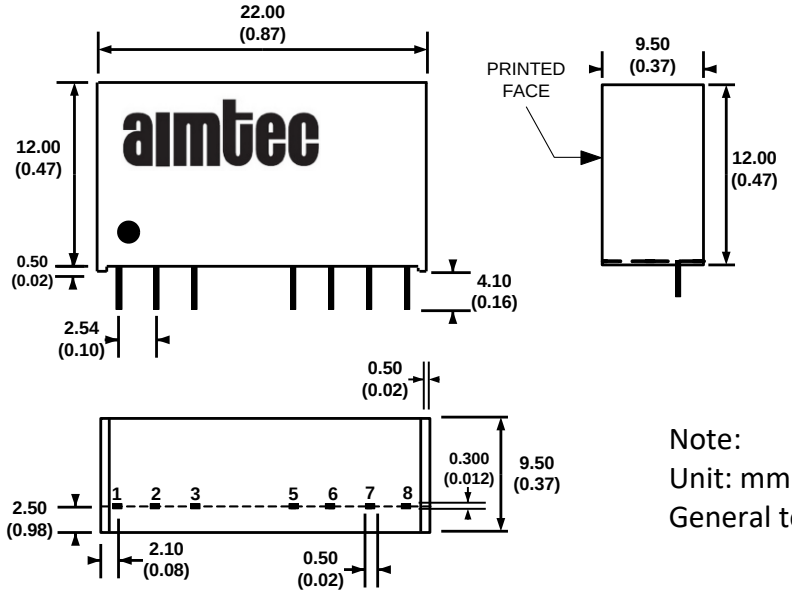

Pin Out Specifications		
Pin	Single output	Dual output
1	-V Input	-V Input
2	+V Input	+V Input
3	Ctrl-Control input (can be left open)	Ctrl-Control input (can be left open)
5	N.C.	N.C.
6	+V Output	+V Output
7	-V Output	Common
8	N.C.	-V Output

Note:
Unit: mm(inch)
General tolerances: ±0.25(±0.01)

NOTE: 1. Datasheets are updated as needed and as such, specifications are subject to change without notice. Once printed or downloaded, datasheets are no longer controlled by Aimtec; refer to www.aimtec.com for the most current product specifications. **2.** Product labels shown, including safety agency certifications on labels, may vary based on the date manufactured. **3.** Mechanical drawings and specifications are for reference only. **4.** All specifications are measured at an ambient temperature of 25°C, humidity<75%, nominal input voltage and at rated output load unless otherwise specified. **5.** Aimtec may not have conducted destructive testing or chemical analysis on all internal components and chemicals at the time of publishing this document. CAS numbers and other limited information are considered proprietary and may not be available for release. **6.** This product is not designed for use in critical life support systems, equipment used in hazardous environments, nuclear control systems or other such applications which necessitate specific safety and regulatory standards other the ones listed in this datasheet. **7.** Warranty is in accordance with Aimtec's standard Terms of Sale available at www.aimtec.com.