aimtec
Your Power Partner

Series AM1G-Z

1 Watt | DC-DC Converter



FEATURES:

- RoHS compliant
- High efficiency up to 77%
- Remote On/Off Control
- 8 pin SIP package
- Operating temperature -40°C to + 85°C
- Continuous Short Circuit Protection
- Wide 2:1 input range
- Input / Output Isolation 1000 & 3000VDC

Models
Single output

Model	Input Voltage (V)	Output Voltage (V)	Output Current Max (mA)	Isolation (VDC)	Capacitor Load (µF)	Input Current Full Load | No Load (mA)		Efficiency (%)
AM1G-0503SZ	4.5-9	3.3	303	1000	3300	298	15	67
AM1G-0505SZ	4.5-9	5	200	1000	3300	298	15	67
AM1G-0507SZ	4.5-9	7.2	139	1000	470	295	43	68
AM1G-0509SZ	4.5-9	9	111	1000	470	285	40	70
AM1G-0512SZ	4.5-9	12	83	1000	470	285	55	70
AM1G-0515SZ	4.5-9	15	67	1000	470	285	55	70
AM1G-0518SZ	4.5-9	18	56	1000	220	285	55	67
AM1G-0524SZ	4.5-9	24	42	1000	220	294	70	68
AM1G-1203SZ	9-18	3.3	303	1000	3300	119	15	70
AM1G-1205SZ	9-18	5	200	1000	3300	115	15	72
AM1G-1207SZ	9-18	7.2	139	1000	470	110	15	73
AM1G-1209SZ	9-18	9	111	1000	470	108	15	77
AM1G-1212SZ	9-18	12	83	1000	470	108	15	77
AM1G-1215SZ	9-18	15	67	1000	470	108	15	77
AM1G-1218SZ	9-18	18	56	1000	220	109	15	71
AM1G-1224SZ	9-18	24	42	1000	220	114	15	73
AM1G-2403SZ	18-36	3.3	303	1000	3300	59	8	70
AM1G-2405SZ	18-36	5	200	1000	3300	57	8	72
AM1G-2407SZ	18-36	7.2	139	1000	470	56	8	72
AM1G-2409SZ	18-36	9	111	1000	470	55	8	75
AM1G-2412SZ	18-36	12	83	1000	470	55	8	75
AM1G-2415SZ	18-36	15	67	1000	470	55	8	75
AM1G-2418SZ	18-36	18	56	1000	220	55	8	73
AM1G-2424SZ	18-36	24	42	1000	220	55	8	75
AM1G-4803SZ	36-72	3.3	303	1000	3300	31	6	66
AM1G-4805SZ	36-72	5	200	1000	3300	30	6	68
AM1G-4809SZ	36-72	9	111	1000	470	29	6	70
AM1G-4812SZ	36-72	12	83	1000	470	29	6	70
AM1G-4815SZ	36-72	15	67	1000	470	29	6	70
AM1G-4824SZ	36-72	24	42	1000	220	30	6	68
AM1G-0503SH30Z	4.5-9	3.3	303	3000	3300	298	15	67
AM1G-0505SH30Z	4.5-9	5	200	3000	3300	298	15	67
AM1G-0507SH30Z	4.5-9	7.2	139	3000	470	295	43	68
AM1G-0509SH30Z	4.5-9	9	111	3000	470	285	40	70
AM1G-0512SH30Z	4.5-9	12	83	3000	470	285	55	70
AM1G-0515SH30Z	4.5-9	15	67	3000	470	285	55	70
AM1G-0518SH30Z	4.5-9	18	56	3000	220	285	55	67
AM1G-0524SH30Z	4.5-9	24	42	3000	220	294	70	68
AM1G-1203SH30Z	9-18	3.3	303	3000	3300	119	15	70
AM1G-1205SH30Z	9-18	5	200	3000	3300	115	15	72
AM1G-1207SH30Z	9-18	7.2	139	3000	470	110	15	73
AM1G-1209SH30Z	9-18	9	111	3000	470	108	15	77
AM1G-1212SH30Z	9-18	12	83	3000	470	108	15	77

Models
Single output (continued)

Model	Input Voltage (V)	Output Voltage (V)	Output Current max (mA)	Isolation (VDC)	Capacitor Load (µF)	Input Current Full Load | No Load (mA)		Efficiency (%)
AM1G-1215SH30Z	9-18	15	67	3000	470	108	15	77
AM1G-1218SH30Z	9-18	18	56	3000	220	109	15	71
AM1G-1224SH30Z	9-18	24	42	3000	220	114	15	73
AM1G-2403SH30Z	18-36	3.3	303	3000	3300	59	8	70
AM1G-2405SH30Z	18-36	5	200	3000	3300	57	8	72
AM1G-2407SH30Z	18-36	7.2	139	3000	470	56	8	72
AM1G-2409SH30Z	18-36	9	111	3000	470	55	8	75
AM1G-2412SH30Z	18-36	12	83	3000	470	55	8	75
AM1G-2415SH30Z	18-36	15	67	3000	470	55	8	75
AM1G-2418SH30Z	18-36	18	56	3000	220	55	8	73
AM1G-2424SH30Z	18-36	24	42	3000	220	55	8	75
AM1G-4803SH30Z	36-72	3.3	303	3000	3300	31	6	66
AM1G-4805SH30Z	36-72	5	200	3000	3300	30	6	68
AM1G-4809SH30Z	36-72	9	111	3000	470	29	6	70
AM1G-4812SH30Z	36-72	12	83	3000	470	29	6	70
AM1G-4815SH30Z	36-72	15	67	3000	470	29	6	70
AM1G-4824SH30Z	36-72	24	42	3000	220	30	6	68

Models
Dual output

Model	Input Voltage (V)	Output Voltage (V)	Output Current max (mA)	Isolation (VDC)	Capacitor Load (µF)	Input Current Full Load | No Load (mA)		Efficiency (%)
AM1G-0503DZ	4.5-9	±3.3	±152	1000	±1000	285	15	70
AM1G-0505DZ	4.5-9	±5	±100	1000	±1000	270	15	74
AM1G-0507DZ	4.5-9	±7.2	±69	1000	±220	270	16	69
AM1G-0509DZ	4.5-9	±9	±56	1000	±220	270	20	74
AM1G-0512DZ	4.5-9	±12	±42	1000	±220	266	20	75
AM1G-0515DZ	4.5-9	±15	±33	1000	±220	285	40	70
AM1G-0518DZ	4.5-9	±18	±28	1000	±100	294	50	67
AM1G-0524DZ	4.5-9	±24	±21	1000	±100	298	70	67
AM1G-1203DZ	9-18	±3.3	±152	1000	±1000	119	15	70
AM1G-1205DZ	9-18	±5	±100	1000	±1000	115	15	72
AM1G-1207DZ	9-18	±7.2	±69	1000	±220	111	15	70
AM1G-1209DZ	9-18	±9	±56	1000	±220	109	15	76
AM1G-1212DZ	9-18	±12	±42	1000	±220	109	15	76
AM1G-1215DZ	9-18	±15	±33	1000	±220	112	15	74
AM1G-1218DZ	9-18	±18	±28	1000	±100	120	20	68
AM1G-1224DZ	9-18	±24	±21	1000	±100	124	40	67
AM1G-2403DZ	18-36	±3.3	±152	1000	±1000	59	8	70
AM1G-2405DZ	18-36	±5	±100	1000	±1000	59	8	70
AM1G-2407DZ	18-36	±7.2	±69	1000	±220	57	8	69
AM1G-2409DZ	18-36	±9	±56	1000	±220	54	8	76
AM1G-2412DZ	18-36	±12	±42	1000	±220	54	8	77
AM1G-2415DZ	18-36	±15	±33	1000	±220	55	8	75
AM1G-2418DZ	18-36	±18	±28	1000	±100	57	10	69
AM1G-2424DZ	18-36	±24	±21	1000	±100	59	20	70
AM1G-4803DZ	36-72	±3.3	±152	1000	±1000	30	6	70
AM1G-4805DZ	36-72	±5	±100	1000	±1000	30	6	70

Models
Dual output (continued)

Model	Input Voltage (V)	Output Voltage (V)	Output Current max (mA)	Isolation (VDC)	Capacitor Load (µF)	Input Current Full Load | No Load (mA)		Efficiency (%)
AM1G-4809DZ	36-72	±9	±56	1000	±220	28	6	74
AM1G-4812DZ	36-72	±12	±42	1000	±220	27	6	76
AM1G-4815DZ	36-72	±15	±33	1000	±220	29	6	72
AM1G-4824DZ	36-72	±24	±21	1000	±100	30	12	70
AM1G-0503DH30Z	4.5-9	±3.3	±152	3000	±1000	285	15	70
AM1G-0505DH30Z	4.5-9	±5	±100	3000	±1000	270	15	74
AM1G-0507DH30Z	4.5-9	±7.2	±69	3000	±220	270	16	69
AM1G-0509DH30Z	4.5-9	±9	±56	3000	±220	270	20	74
AM1G-0512DH30Z	4.5-9	±12	±42	3000	±220	266	20	75
AM1G-0515DH30Z	4.5-9	±15	±33	3000	±220	285	40	70
AM1G-0518DH30Z	4.5-9	±18	±28	3000	±100	294	50	67
AM1G-0524DH30Z	4.5-9	±24	±21	3000	±100	298	70	67
AM1G-1203DH30Z	9-18	±3.3	±152	3000	±1000	119	15	70
AM1G-1205DH30Z	9-18	±5	±100	3000	±1000	115	15	72
AM1G-1207DH30Z	9-18	±7.2	±69	3000	±220	111	15	70
AM1G-1209DH30Z	9-18	±9	±56	3000	±220	109	15	76
AM1G-1212DH30Z	9-18	±12	±42	3000	±220	109	15	76
AM1G-1215DH30Z	9-18	±15	±33	3000	±220	112	15	74
AM1G-1218DH30Z	9-18	±18	±28	3000	±100	120	20	68
AM1G-1224DH30Z	9-18	±24	±21	3000	±100	124	40	67
AM1G-2403DH30Z	18-36	±3.3	±152	3000	±1000	59	8	70
AM1G-2405DH30Z	18-36	±5	±100	3000	±1000	59	8	70
AM1G-2407DH30Z	18-36	±7.2	±69	3000	±220	57	8	69
AM1G-2409DH30Z	18-36	±9	±56	3000	±220	54	8	76
AM1G-2412DH30Z	18-36	±12	±42	3000	±220	54	8	77
AM1G-2415DH30Z	18-36	±15	±33	3000	±220	55	8	75
AM1G-2418DH30Z	18-36	±18	±28	3000	±100	57	10	69
AM1G-2424DH30Z	18-36	±24	±21	3000	±100	59	20	70
AM1G-4803DH30Z	36-72	±3.3	±152	3000	±1000	30	6	70
AM1G-4805DH30Z	36-72	±5	±100	3000	±1000	30	6	70
AM1G-4809DH30Z	36-72	±9	±56	3000	±220	28	6	74
AM1G-4812DH30Z	36-72	±12	±42	3000	±220	27	6	76
AM1G-4815DH30Z	36-72	±15	±33	3000	±220	29	6	72
AM1G-4824DH30Z	36-72	±24	±21	3000	±100	30	12	70

NOTE: All specifications in this datasheet are measured at an ambient temperature of 25°C, humidity<75%, nominal input voltage and at rated output load unless otherwise specified.

Input Specifications

Parameters	Nominal	Typical	Maximum	Units
Voltage range	5 12 24 48	4.5-9 9-18 18-36 36-72		VDC
Filter	Capacitor			
Absolute Maximum Rating	5 Vin 12 Vin 24 Vin 48 Vin	-0.7-12 -0.7-24 -0.7-40 -0.7-80		VDC
Peak Input Voltage time			100	ms
On/Off Control	ON – low or open (0Vdc to 0.8Vdc)			
	OFF – high (4.5Vdc to 15Vdc) OFF idle current: 5mA typ.			
Input reflected ripple current*		35		mA p-p

*Measured with 12µH source inductance.

Isolation Specifications

Parameters	Conditions	Typical	Rated	Units
Tested I/O voltage	60 sec		1000 & 3000	VDC
Resistance		> 1000		MOhm
Capacitance		60		pF

Output Specifications

Parameters	Conditions	Typical	Maximum	Units
Voltage accuracy			±2	%
Cross Regulation	25% load on 1st load - 100% load on 2nd load	±5		%
Short Circuit protection	Continuous			
Short Circuit restart	Auto recovery			
Line voltage regulation	LL ~ HL		±0.5	%
Load voltage regulation	load 25~100%		±1	%
Temperature coefficient		±0.02		%/°C
Ripple & Noise	At 20MHz Bandwidth		80	mV p-p
Minimum Load Current *		25		% of Max

* Operating the converter below the minimum load current will not damage the converter, but the specifications may not be meet.

General Specifications

Parameters	Conditions	Typical	Maximum	Units
Switching frequency	100% load	>100	650	KHz
Operating temperature	Full Load without Derating	-40 to +85		°C
Storage temperature		-40 to +125		°C
Maximum Case temperature			+100	°C
Cooling	Free air convection			
Humidity			95	%
Case material	Non-conductive black plastic (UL94V-0 rated)			
Weight		4.5		g
Dimensions (L x W x H)	0.86 x 0.36 x 0.44 inch 21.85 x 9.20 x 11.10 mm			
MTBF	>1 660 000 hrs (MIL-HDBK -217F, Ground Benign, t=+25°C)			

Safety Specifications

Parameters	
Agency Approval	CE, UL
Standards	EN55032 Class A, with the recommended EMI circuit, EN55024
	IEC61000-4-2, Perf. Criteria A
	IEC61000-4-3, Perf. Criteria A
	IEC61000-4-4, Perf. Criteria A (external 220uF/100V cap required)
	IEC61000-4-5, Perf. Criteria A (external 220uF/100V cap required)
	IEC61000-4-6, Perf. Criteria A
	IEC61000-4-8, Perf. Criteria A
	IEC/EN/UL 60950-1:2001 & IEC/EN/UL 62368-1

Pin Out Specifications

Pin	1000 & 3000VDC	
	Single	Dual
1	- V Input	- V Input
2	+ V Input	+ V Input
3	On/Off Control	On/Off Control
5	N.C.	N.C.
6	+ V Output	+ V Output
7	- V Output	Common
8	N.C.	- V Output

Dimensions

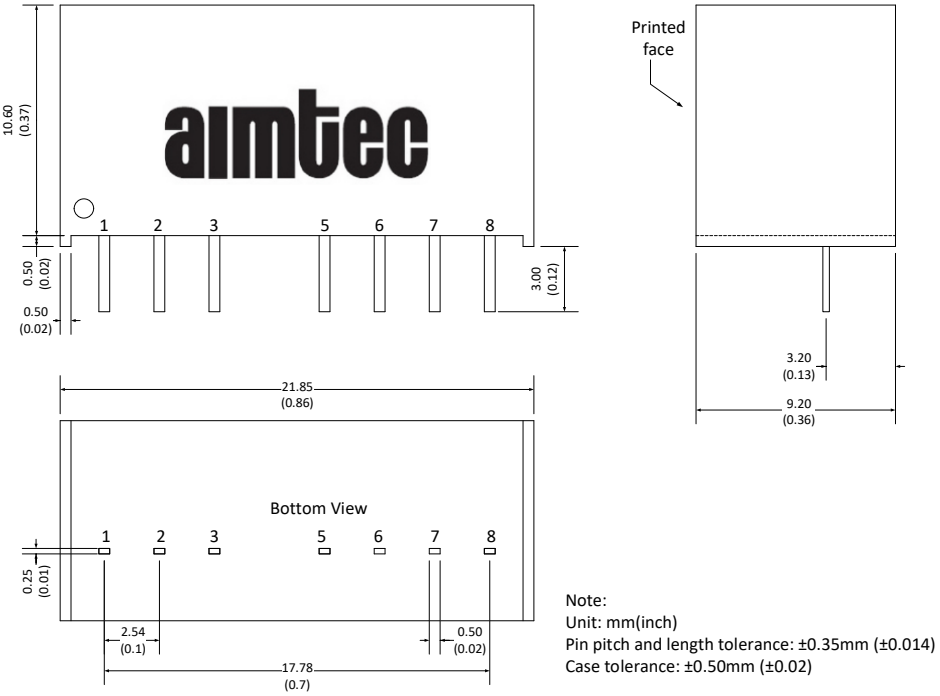

Note:
Unit: mm(inch)
Pin pitch and length tolerance: ±0.35mm (±0.014)
Case tolerance: ±0.50mm (±0.02)

Control ON/OFF pin connection example:

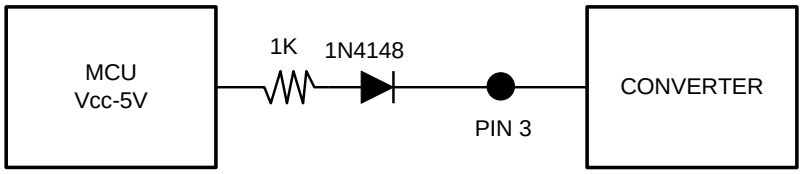

The voltage could be applied trough a limiting resistor and a switching diode. The converter is in a low power mode during high level phase.

Recommended EMI circuit
Conducted Emissions:

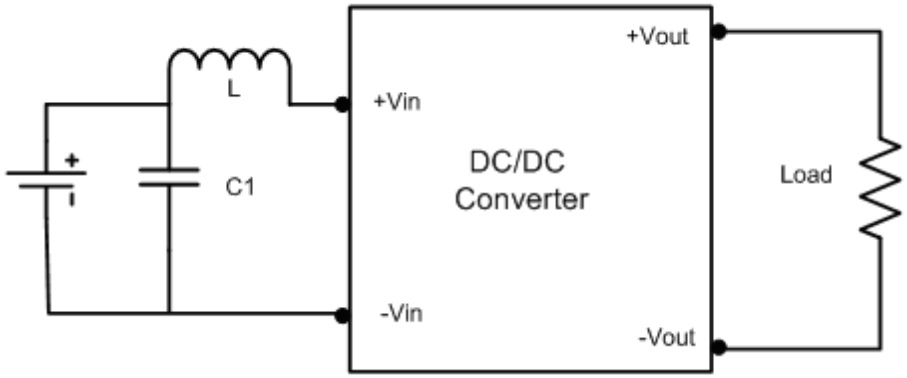

C1	L1
100µF/100V	12 µH

Surge/EFT:

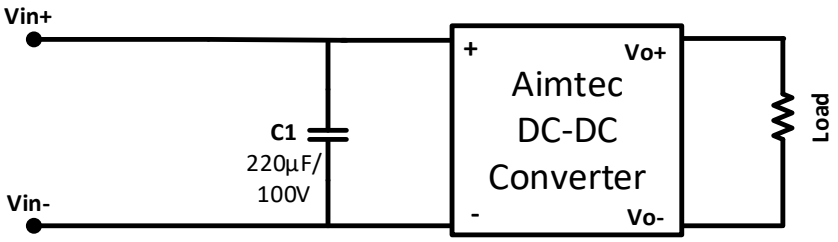

NOTE: 1. Datasheets are updated as needed and as such, specifications are subject to change without notice. Once printed or downloaded, datasheets are no longer controlled by Aimtec; refer to www.aimtec.com for the most current product specifications. **2.** Product labels shown, including safety agency certifications on labels, may vary based on the date manufactured. **3.** Mechanical drawings and specifications are for reference only. **4.** All specifications are measured at an ambient temperature of 25°C, humidity<75%, nominal input voltage and at rated output load unless otherwise specified. **5.** Aimtec may not have conducted destructive testing or chemical analysis on all internal components and chemicals at the time of publishing this document. CAS numbers and other limited information are considered proprietary and may not be available for release. **6.** This product is not designed for use in critical life support systems, equipment used in hazardous environments, nuclear control systems or other such applications which necessitate specific safety and regulatory standards other the ones listed in this datasheet. **7.** Warranty is in accordance with Aimtec's standard Terms of Sale available at www.aimtec.com.