aimtec
Your Power Partner

Series AM1G-NZ

1 Watt | DC-DC Converter

FEATURES:



- I/O Isolation of 1500 and 3000VDC
- Very low no load consumption
- Remote On/Off Control
- 8 pin SIP package
- Operating temperature -40 to +100°C
- Continuous Short circuit protection
- Wide 2:1 input range
- High efficiency up to 81%

RoHS

Models
Single output

Model	Input Voltage (V)	Output Voltage (V)	Output Current max (mA)	Isolation (VDC)	Capacitor Load (µF)	Efficiency (%)
AM1G-0503S-NZ	4.5-9	3.3	303	1500	2700	72
AM1G-0505S-NZ	4.5-9	5	200	1500	2200	72
AM1G-0512S-NZ	4.5-9	12	83	1500	1000	76
AM1G-0515S-NZ	4.5-9	15	67	1500	680	75
AM1G-0524S-NZ	4.5-9	24	42	1500	470	74
AM1G-1203S-NZ	9-18	3.3	303	1500	2700	75
AM1G-1205S-NZ	9-18	5	200	1500	2200	77
AM1G-1209S-NZ	9-18	9	111	1500	1800	79
AM1G-1212S-NZ	9-18	12	83	1500	1000	80
AM1G-1215S-NZ	9-18	15	67	1500	680	80
AM1G-1224S-NZ	9-18	24	42	1500	470	79
AM1G-1505S-NZ	12-24	5	200	1500	2200	77
AM1G-2403S-NZ	18-36	3.3	303	1500	2700	75
AM1G-2405S-NZ	18-36	5	200	1500	2200	77
AM1G-2412S-NZ	18-36	12	83	1500	1000	81
AM1G-2415S-NZ	18-36	15	67	1500	680	79
AM1G-2424S-NZ	18-36	24	42	1500	470	77
AM1G-4803S-NZ	36-75	3.3	303	1500	2700	75
AM1G-4805S-NZ	36-75	5	200	1500	2200	76
AM1G-4812S-NZ	36-75	12	83	1500	1000	81
AM1G-4815S-NZ	36-75	15	67	1500	680	80
AM1G-0503SH30-NZ	4.5-9	3.3	303	3000	2700	72
AM1G-0505SH30-NZ	4.5-9	5	200	3000	2200	72
AM1G-0512SH30-NZ	4.5-9	12	83	3000	1000	76
AM1G-0515SH30-NZ	4.5-9	15	67	3000	680	75
AM1G-1203SH30-NZ	9-18	3.3	303	3000	2700	75
AM1G-1205SH30-NZ	9-18	5	200	3000	2200	77
AM1G-1209SH30-NZ	9-18	9	111	3000	1800	79
AM1G-1212SH30-NZ	9-18	12	83	3000	1000	80
AM1G-1215SH30-NZ	9-18	15	67	3000	680	80
AM1G-2403SH30-NZ	18-36	3.3	303	3000	2700	75
AM1G-2405SH30-NZ	18-36	5	200	3000	2200	77
AM1G-2412SH30-NZ	18-36	12	83	3000	1000	81
AM1G-2415SH30-NZ	18-36	15	67	3000	680	79
AM1G-2424SH30-NZ	18-36	24	42	3000	470	77
AM1G-4803SH30-NZ	36-75	3.3	303	3000	2700	75
AM1G-4805SH30-NZ	36-75	5	200	3000	2200	76
AM1G-4812SH30-NZ	36-75	12	83	3000	1000	81
AM1G-4815SH30-NZ	36-75	15	67	3000	680	80

Models

Dual output

Model	Input Voltage (V)	Output Voltage(V)	Output Current max (mA)	Isolation (VDC)	Capacitor Load (µF)	Efficiency (%)
AM1G-0505D-NZ	4.5-9	±5	±100	1500	±1000	73
AM1G-0512D-NZ	4.5-9	±12	±42	1500	±470	76
AM1G-0515D-NZ	4.5-9	±15	±33	1500	±330	75
AM1G-1205D-NZ	9-18	±5	±100	1500	±1000	78
AM1G-1212D-NZ	9-18	±12	±42	1500	±470	81
AM1G-1215D-NZ	9-18	±15	±33	1500	±330	80
AM1G-2405D-NZ	18-36	±5	±100	1500	±1000	80
AM1G-2409D-NZ	18-36	±9	±56	1500	±680	80
AM1G-2412D-NZ	18-36	±12	±42	1500	±470	80
AM1G-2415D-NZ	18-36	±15	±33	1500	±330	80
AM1G-4805D-NZ	36-75	±5	±100	1500	±1000	76
AM1G-4812D-NZ	36-75	±12	±42	1500	±470	80
AM1G-4815D-NZ	36-75	±15	±33	1500	±330	80
AM1G-0505DH30-NZ	4.5-9	±5	±100	3000	±1000	73
AM1G-0512DH30-NZ	4.5-9	±12	±42	3000	±470	76
AM1G-0515DH30-NZ	4.5-9	±15	±33	3000	±330	75
AM1G-1205DH30-NZ	9-18	±5	±100	3000	±1000	78
AM1G-1212DH30-NZ	9-18	±12	±42	3000	±470	81
AM1G-1215DH30-NZ	9-18	±15	±33	3000	±330	80
AM1G-2405DH30-NZ	18-36	±5	±100	3000	±1000	80
AM1G-2412DH30-NZ	18-36	±12	±42	3000	±470	80
AM1G-2415DH30-NZ	18-36	±15	±33	3000	±330	80
AM1G-4805DH30-NZ	36-75	±5	±100	3000	±1000	76
AM1G-4812DH30-NZ	36-75	±12	±42	3000	±470	80
AM1G-4815DH30-NZ	36-75	±15	±33	3000	±330	80

Input Specifications

Parameters	Nominal	Typical	Maximum	Units
Voltage range	5 12 15 24 48	4.5-9 9-18 12-24 18-36 36-75		VDC
Peak Input Voltage time			1	sec
Filter		Capacitor		
Maximum Rating	5 Vin 12 Vin 15 Vin 24 Vin 48 Vin	12 25 25 50 100		VDC
No load input current	5 Vin 12 Vin 15 Vin 24 Vin 48 Vin	25 12 12 6 4		mA
Input Reflected Ripple Current	5 Vin 12 Vin 15 Vin 24 Vin 48 Vin	30 40 40 55 70		mA
On/Off Control*	ON – open or Isolated; OFF – high voltage level (current 5-10mA)			

*Note: Exceeding 20mA of control current will permanently damage the converter.

Isolation Specifications

Parameters	Conditions	Typical	Rated	Units
Tested I/O voltage	60sec, <1mA		1500, 3000	VDC
Resistance		> 1000		MOhm
Capacitance	3000VDC Isolation,100kHz, 0.1V	30		pF
	1500VDC Isolation,100kHz, 0.1V	120		

Output Specifications

Parameters	Conditions	Typical	Maximum	Units
Voltage accuracy	5 to 100% load	±2		%
No Load Voltage accuracy		±5		
Voltage balance	Dual Output balanced load	±0.5		%
Short Circuit Protection		Continuous		
Short Circuit Restart		Automatic restart		
Line voltage regulation	LL~HL	±0.5		%
Load voltage regulation	load 5~100%	±0.6		%
Temperature coefficient		±0.02		%/°C
Transient Recovery Time	25% load step	2		msec
Transient Response Deviation	25% load step	±5		%
Ripple	At 20MHz Bandwidth	50		mV p-p
Noise	At 20MHz Bandwidth	90		mV p-p

General Specifications

Parameters	Conditions	Typical	Maximum	Units
Switching frequency	100% load	200		KHz
Operating temperature	With derating above 85°C	-40 to +100		°C
Storage temperature		-55 to +125		°C
Case Temperature			105	°C
Lead Temperature	1.5mm from case for 10 Seconds	300		°C
Cooling		Free air convection		
Humidity			95	%
Case material	Plastic (UL94V-0 rated)			
Weight		4.9		g
Dimensions (L x Wx H)	0.87 x 0.37 x 0.47 inch, 22 x 9.5 x 12 mm			
MTBF	>1 000 000 hrs (MIL-HDBK -217F, Ground Benign, t=+25°C)			

NOTE: All specifications in this datasheet are measured at an ambient temperature of 25°C, humidity<75%, nominal input voltage and at rated output load unless otherwise specified.

Safety Specifications

Parameters		
Standards	Information technology Equipment	Designed to meet UL 60950-1 (AM1G-0505S-NZ only)

Derating

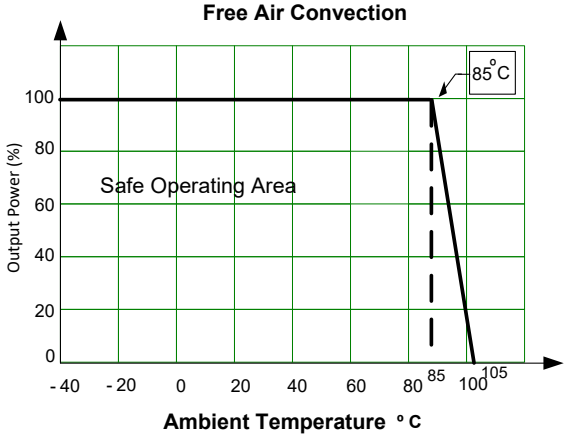

Pin Out Specifications

Dimensions

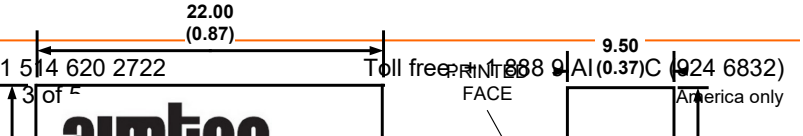

Pin	Single	Dual
1	- V Input	- V Input
2	+ V Input	+ V Input
3	On/Off Control	On/Off Control
5	N.C.	N.C.
6	+ V Output	+ V Output
7	- V Output	Common
8	CS	- V Output

Recommended EMC Circuit

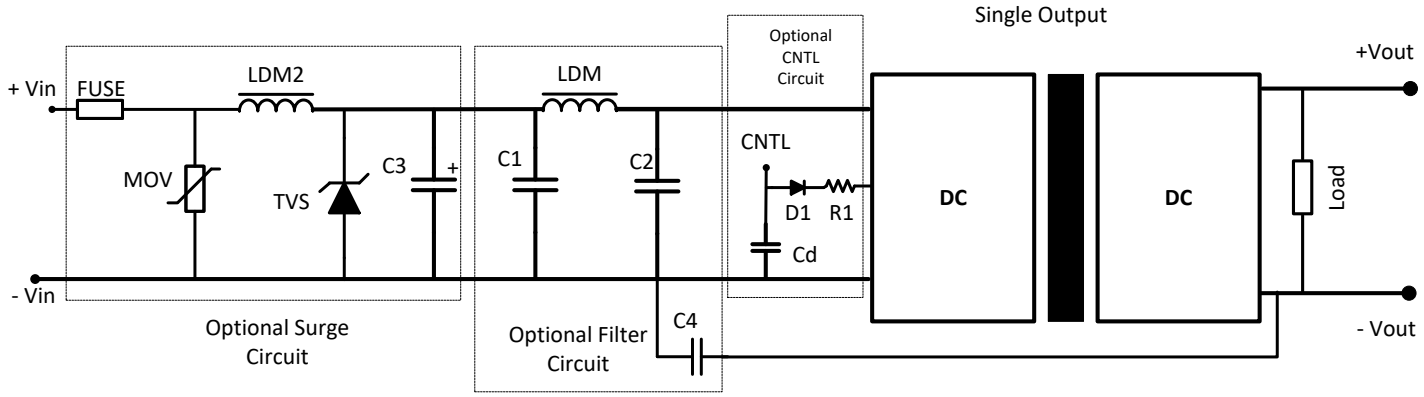

Model	C1	C2	C4	LDM	MOV	TVS	C3	LDM2	Cd	D1	R1
5 Vin	4.7µF / 50V	4.7µF / 50V	1nF /3KV	12 µH	-	SMCJ13A	680µF / 16V	-	47nF /100V	RB160M -60/1A	See Formula
12 Vin	4.7µF / 50V	4.7µF / 50V	1nF /3KV	12 µH	-	SMCJ28A	680µF / 25V	-	47nF /100V	RB160M -60/1A	See Formula
24 Vin	4.7µF / 100V	4.7µF / 50V	1nF /3KV	12 µH	S14K35	SMCJ48A	330µF / 50V	56µH	47nF /100V	RB160M -60/1A	See Formula
48 Vin	4.7µF / 100V	4.7µF / 100V	1nF /3KV	12 µH	S14K60	SMCJ90A	330µF / 100V	56µH	47nF /100V	RB160M -60/1A	See Formula

Note: Fuse is user selectable

$$R1 = ((V_{cd} - V_{d1} - 1.0) / I_{cntl}) - 300$$

Recommended Circuits

Single Output

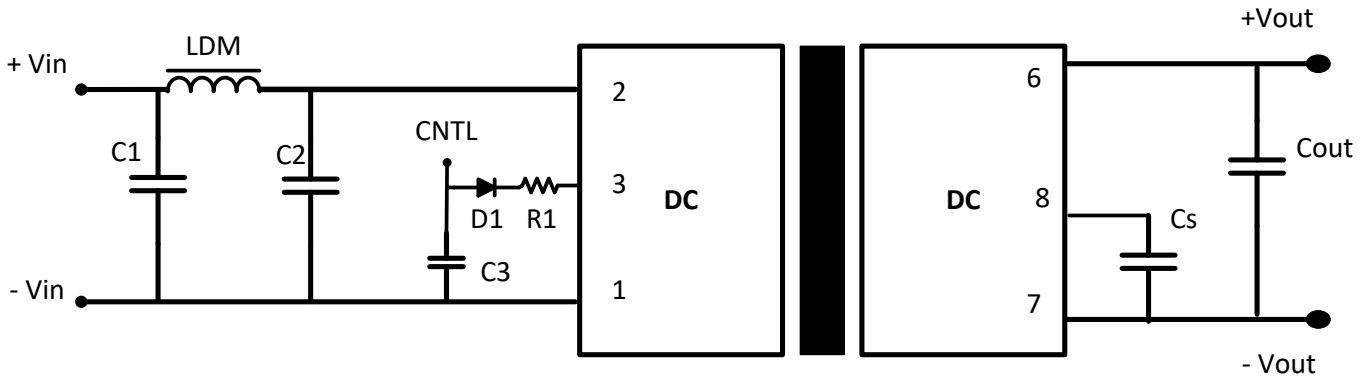

Dual Output

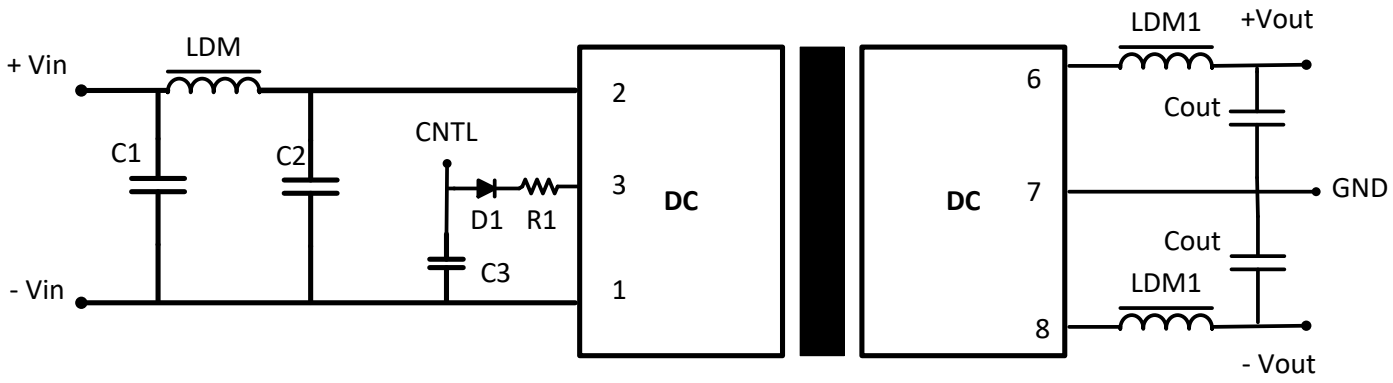

Model	C1	C2	LDM	C3	D1	R1	LDM1	CS	Cout
5 Vin	100µF	47µF	4.7 - 12 µH	47µF / 100V	RB160M-60/1A	See Formula	2.2 - 10 µH	10 - 22µF	100µF
12 Vin	100µF	47µF	4.7 - 12 µH	47µF / 100V	RB160M-60/1A	See Formula	2.2 - 10 µH	10 - 22µF	100µF
24 Vin	10µF	1µF	4.7 - 12 µH	47µF / 100V	RB160M-60/1A	See Formula	2.2 – 10 µH	10 - 22µF	100µF
48 Vin	10µF	1µF	4.7 - 12 µH	47µF / 100V	RB160M-60/1A	See Formula	2.2 - 10 µH	10 - 22µF	100µF

$R1 = ((V_{cd} - V_{d1} - 1.0) / I_{cntl}) - 300$

NOTE: 1. Datasheets are updated as needed and as such, specifications are subject to change without notice. Once printed or downloaded, datasheets are no longer controlled by Aimtec; refer to www.aimtec.com for the most current product specifications. **2.** Product labels shown, including safety agency certifications on labels, may vary based on the date manufactured. **3.** Mechanical drawings and specifications are for reference only. **4.** All specifications are measured at an ambient temperature of 25°C, humidity<75%, nominal input voltage and at rated output load unless otherwise specified. **5.** Aimtec may not have conducted destructive testing or chemical analysis on all internal components and chemicals at the time of publishing this document. CAS numbers and other limited information are considered proprietary and may not be available for release. **6.** This product is not designed for use in critical life support systems, equipment used in hazardous environments, nuclear control systems or other such applications which necessitate specific safety and regulatory standards other the ones listed in this datasheet. **7.** Warranty is in accordance with Aimtec's standard Terms of Sale available at www.aimtec.com.