aimtec
Your Power Partner

Series AM1L-NZ

1 Watt | DC-DC Converter

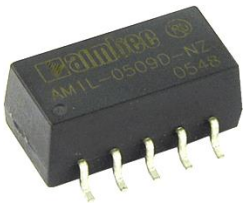

FEATURES:

- Single, Dual, & Dual Separated Models
- SMD Package
- Low ripple and noise
- High efficiency up to 83%
- Operating temperature -40ºC to + 85ºC
- Input / Output Isolation 1000 & 3000VDC
- Pin compatible with multiple manufacturers
- RoHS compliant

Models
Single output

Model	Input Voltage (V)	Output Voltage (V)	Output Current Max | Min (mA)		Isolation (VDC)	Efficiency (%)
AM1L-0303S-NZ	3.0-3.6	3.3	304	30	1000	70
AM1L-0305S-NZ	3.0-3.6	5	200	20	1000	71
AM1L-0505S-NZ	4.5-5.5	5	200	20	1000	78
AM1L-0509S-NZ	4.5-5.5	9	111	11	1000	74
AM1L-0512S-NZ	4.5-5.5	12	84	8	1000	77
AM1L-0515S-NZ	4.5-5.5	15	67	6	1000	78
AM1L-1205S-NZ	10.8-13.2	5	200	20	1000	73
AM1L-1209S-NZ	10.8-13.2	9	111	11	1000	75
AM1L-1212S-NZ	10.8-13.2	12	84	8	1000	79
AM1L-1215S-NZ	10.8-13.2	15	67	6	1000	80
AM1L-2405S-NZ	21.6-26.4	5	200	20	1000	72
AM1L-0505SH30-NZ	4.5-5.5	5	200	20	3000	70
AM1L-0509SH30-NZ	4.5-5.5	9	111	11	3000	75
AM1L-0512SH30-NZ	4.5-5.5	12	84	8	3000	78
AM1L-0515SH30-NZ	4.5-5.5	15	67	6	3000	80
AM1L-1205SH30-NZ	10.8-13.2	5	200	20	3000	72
AM1L-1212SH30-NZ	10.8-13.2	12	84	8	3000	79
AM1L-1215SH30-NZ	10.8-13.2	15	67	6	3000	81

Models
Dual output

Model	Input Voltage (V)	Output Voltage (V)	Output Current Max | Min (mA)		Isolation (VDC)	Efficiency (%)
AM1L-0509D-NZ	4.5-5.5	±9	±56	±6	1000	78
AM1L-0512D-NZ	4.5-5.5	±12	±42	±4	1000	79
AM1L-0515D-NZ	4.5-5.5	±15	±33	±3	1000	78
AM1L-1215D-NZ	10.8-13.2	±15	±33	±3	1000	77
AM1L-0505DH30-NZ	4.5-5.5	±5	±100	±10	3000	72
AM1L-0509DH30-NZ	4.5-5.5	±9	±56	±6	3000	75
AM1L-0512DH30-NZ	4.5-5.5	±12	±42	±4	3000	78
AM1L-0515DH30-NZ	4.5-5.5	±15	±33	±3	3000	79
AM1L-1212DH30-NZ	10.8-13.2	±12	±42	±4	3000	78
AM1L-1215DH30-NZ	10.8-13.2	±15	±33	±3	3000	79

Models

Dual Separated Output

Model	Input Voltage (V)	Output Voltage (V)	Output Current Max | Min (mA)		Isolation (VDC)	Efficiency (%)
AM1L-050505D-NZ	4.5-5.5	5/5	100/100	10/10	1000	70
AM1L-121212D-NZ	10.8-13.2	12/12	42/42	4/4	1000	78

NOTE 1: Add suffix “TR” to a part number when ordering in tape and reel package

NOTE 2: All specifications in this datasheet are measured at an ambient temperature of 25°C, humidity<75%, nominal input voltage and at rated output load unless otherwise specified.

Input Specifications

Parameters	Nominal	Typical	Maximum	Units
Voltage range	3	3.0-3.6		VDC
	5	4.5-5.5		
	12	10.8-13.2		
	24	21.6-26.4		
Filter	Capacitor			

Isolation Specifications

Parameters	Conditions	Typical	Rated	Units
Tested I/O voltage	60 sec		1000 & 3000	VDC
Tested V1 output/ V2 output	60 sec	1000		VDC
Capacitance V input/V output	500Vdc	60		pF
Capacitance V1 output/V2 output	500Vdc	60		pF
Resistance	500Vdc	> 1000		MOhm

Output Specifications

Parameters	Conditions	Typical	Maximum	Units
Voltage accuracy	See the tolerance graph	±5		%
Voltage balance	Dual Output	±2		%
Short Circuit protection	Momentary (1sec)			
Line voltage regulation	For 1.0% of Vin	±1.2		%
Load voltage regulation (Single)	Load 10 – 100%	10		%
Load voltage regulation (Dual)	Load 10 – 100%	10		%
Load voltage regulation (Dual Separated)	Load 10 – 100%	12.8		%
Temperature coefficient		±0.03		%/ºC
Ripple & Noise	At 20MHz Bandwidth	75	100	mV p-p

NOTE: If the operating output current is less than 10% of maximum it is recommended to install a load resistor in parallel with the load to ensure the actual load current meets the minimum load current requirement.

General Specifications

Parameters	Conditions	Typical	Maximum	Units
Switching frequency	100% load	100		KHz
Max Case temperature			+95	ºC
Operating temperature	Without derating	-40 to +85		ºC
Storage temperature		-55 to +125		ºC
Cooling	Free air convection			
Humidity			95	%
Case material	Plastic UL94-VO			
Weight		1.5		g
	Dual Separated	2.1		
Dimensions (L x W x H)	Single 1000VDC	0.50 x 0.44 x 0.25 inch	12.70 x 11.20 x 6.25 mm	
	Dual 1000VDC	0.60 x 0.44 x 0.25 inch	15.24 x 11.20 x 6.25 mm	
	Dual Separated 1000VDC	0.70 x 0.70 x 0.24 inch	17.78 x 17.78 x 6.00 mm	
	Single and Dual 3000VDC	0.6 x 0.44 x 0.26 inch	15.24 x 11.20 x 6.50 mm	
MTBF	>980 000 hrs single, 1 000 000hrs dual (MIL-HDBK -217F, Ground Benign, t=+25ºC)			

Safety Specifications

Parameters	
Agency approvals	cULus (without 24V models and dual separate models)
	CE (for 5 and 12 Vin single models)
Standards	IEC/UL 60950-1

Dimensions
Single 1000VDC

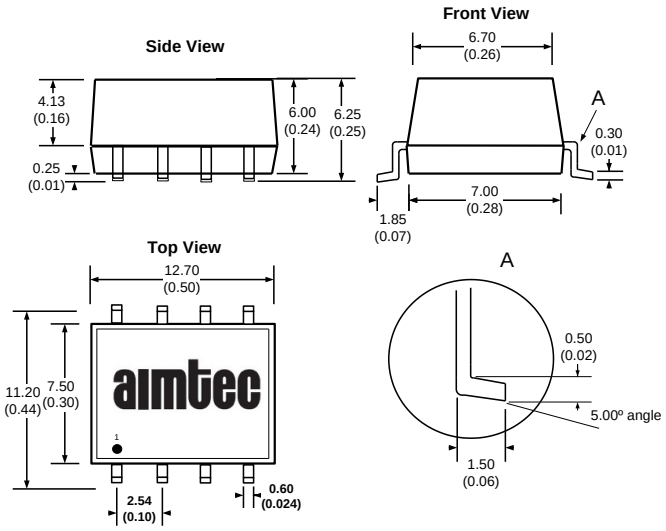

All dimensions are in mm (inch)
All Pins are on a 2.54mm (0.10inch) pitch
with tolerance of ±0.25mm (0.01inch)

Pin Out Specifications

Pin	Single
1	- V Input
2	+ V Input
3	N. C.
4	- V Output
5	.+V Output
6	N.C.
7	N.C.
8	N.C.

N.C: Not Connected

Dual 1000VDC

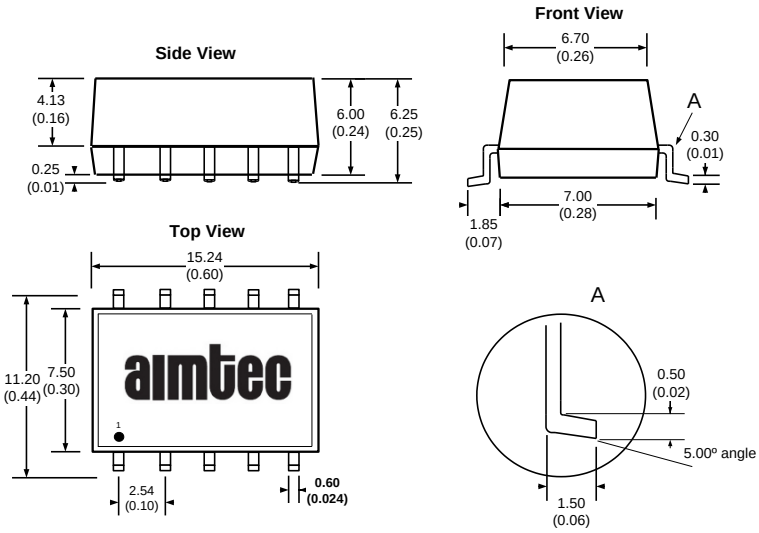

All dimensions are in mm (inch)
All Pins are on a 2.54mm (0.10inch) pitch
with tolerance of ±0.25mm (0.01inch)

Pin	Dual
1	- V Input
2	+ V Input
3	N. C.
4	Common
5	.-V Output
6	N.C.
7	+V Output
8	N.C.
9	N.C.
10	N.C.

Dimensions
Single and Dual 3000VDC

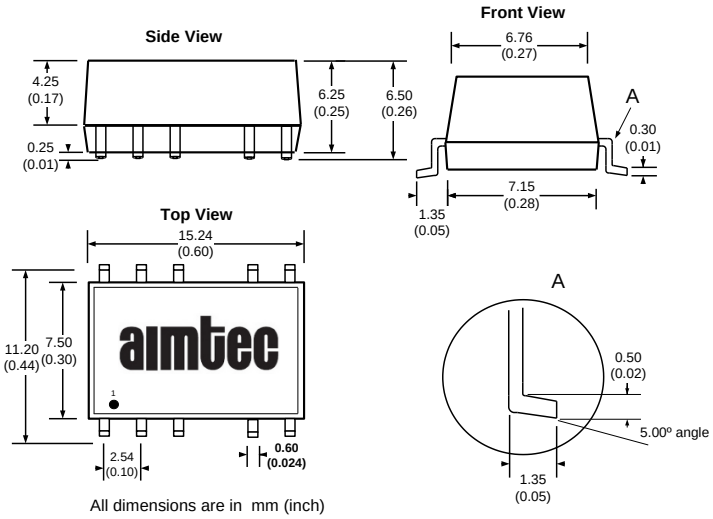

All dimensions are in mm (inch)
All Pins are on a 2.54mm (0.10inch) pitch
with tolerance of ±0.25mm (0.01inch)

Pin Out Specifications

Pin	Single	Dual
1	- V Input	- V Input
2	+ V Input	+ V Input
3	N.C.	N.C.
4	Omitted	Omitted
5	-V Output	Common
6	N.C.	-V Output
7	N.C.	N.C.
8	+V Output	+V Output
9	Omitted	Omitted
10	N.C.	N.C.
11	N.C.	N.C.
12	N.C.	N.C.

Dual Separated 1000VDC

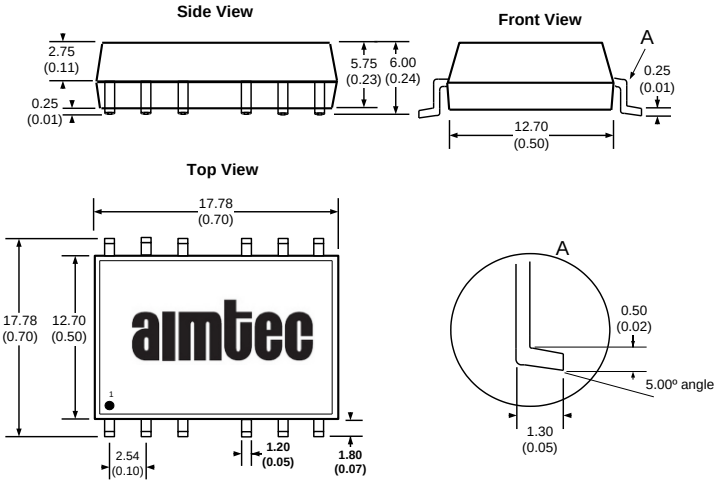

All dimensions are in mm (inch)
All Pins are on a 2.54mm (0.10inch) pitch
with tolerance of ±0.25mm (0.01inch)

Pin	Dual Separated
1	- V Input
2	+ V Input
3	N.C.
5	- V1 Output
6	.+V1 Output
7	N.C
8	N.C
9	.+V2 Output
10	- V2 Output
12	N.C
13	N.C
14	N.C

Tolerance Graph

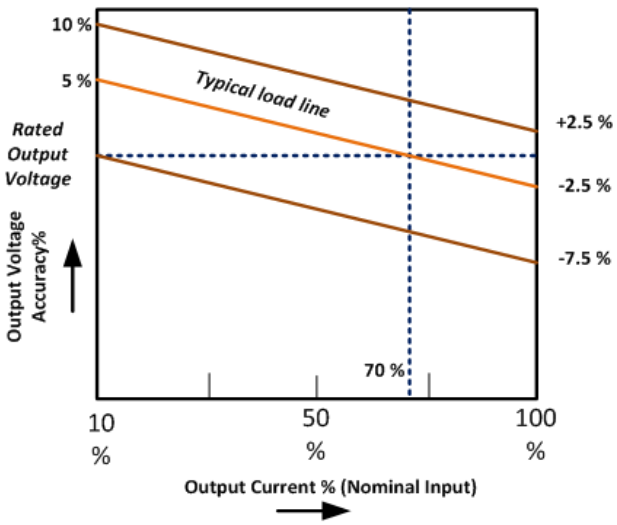

Recommended Filter Circuit

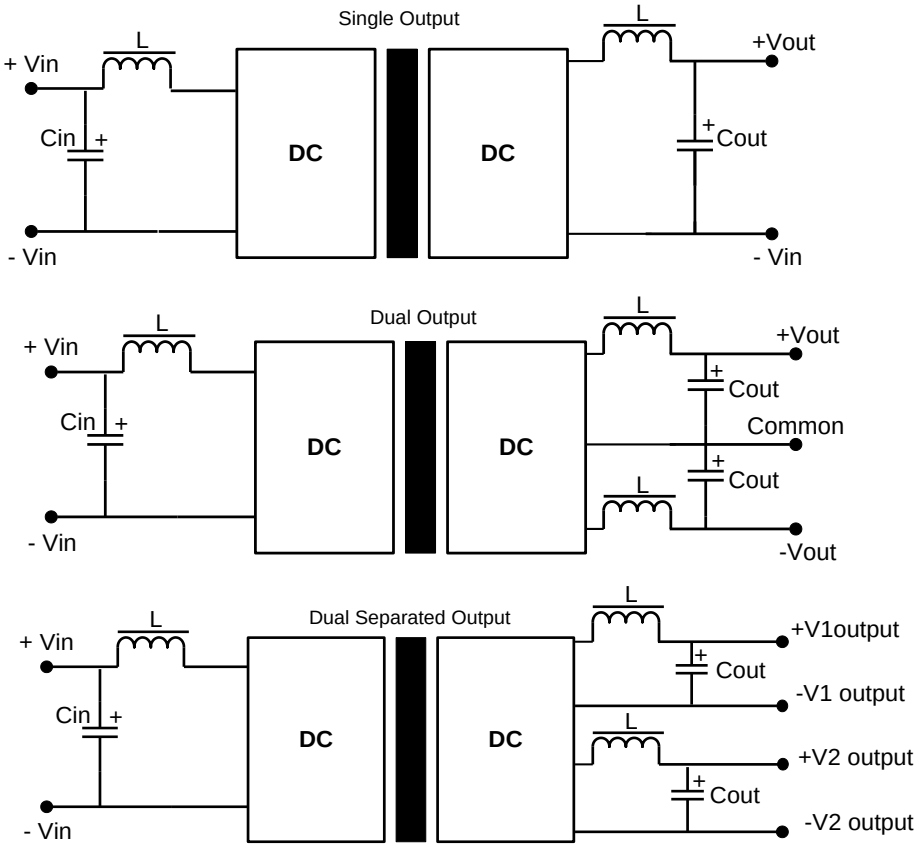

If it is required to decrease the input/output ripple, an “LC” filter network can be installed on the input and output of the converter (see above).
It should be noted that the inductance and the resonant frequency of the “LC” filtering network should differ from the DC/DC converter switching frequency to avoid mutual interference.
The capacitance of the output filter capacitor must not exceed the values in the Table below to avoid startup problems and ensure safe and reliable operation.
It’s not recommended to connect any external capacitor in the application field when output loading is less than 0.5 watt.

External Capacitor Tables

Input Capacitor (Cin)

Vin (VDC)	Cin (uF)
5	4.7
12	2.2

Output Capacitor (Cout)

Single Vout (VDC)	Cout (uF)	Dual Vout (Vdc)	Cout (uF)	Dual SeperatedVout (Vdc)	Cout (uF)
5	10	±5	4.7	5/5	4.7
9	4.7	±9	2.2	9/9	2.2
12	2.2	±12	1	12/12	1
15	1	±15	0.47	15/15	0.47

Typical Efficiency vs. Loading

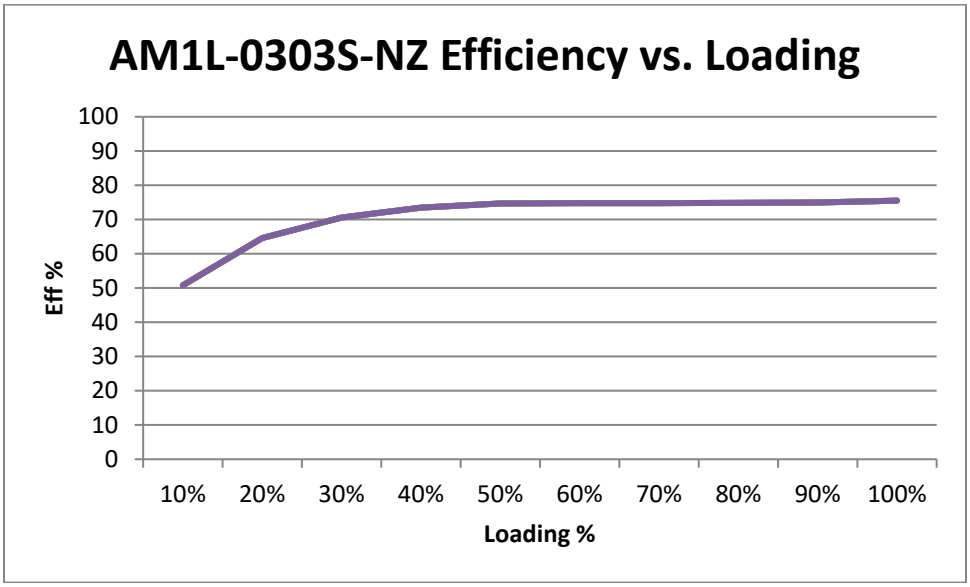

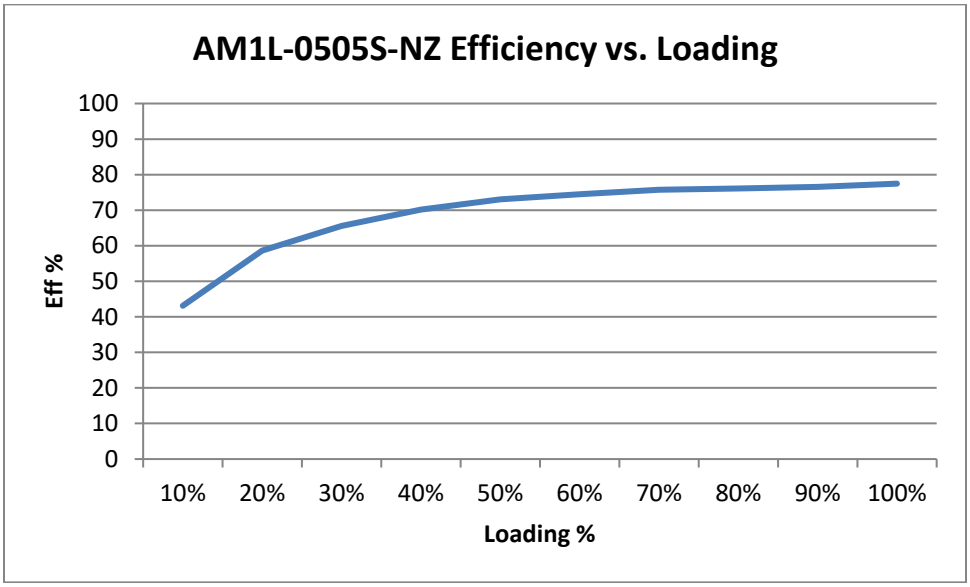

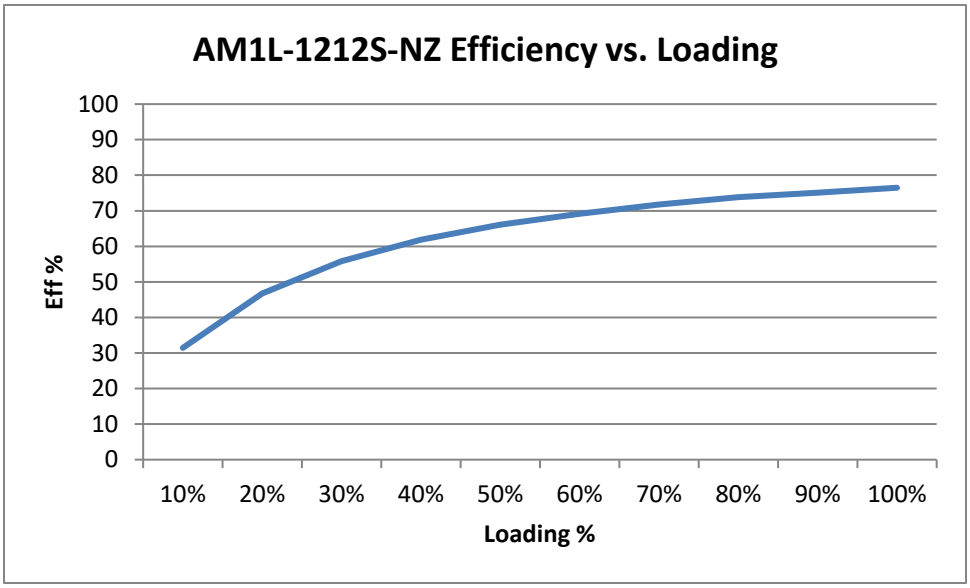

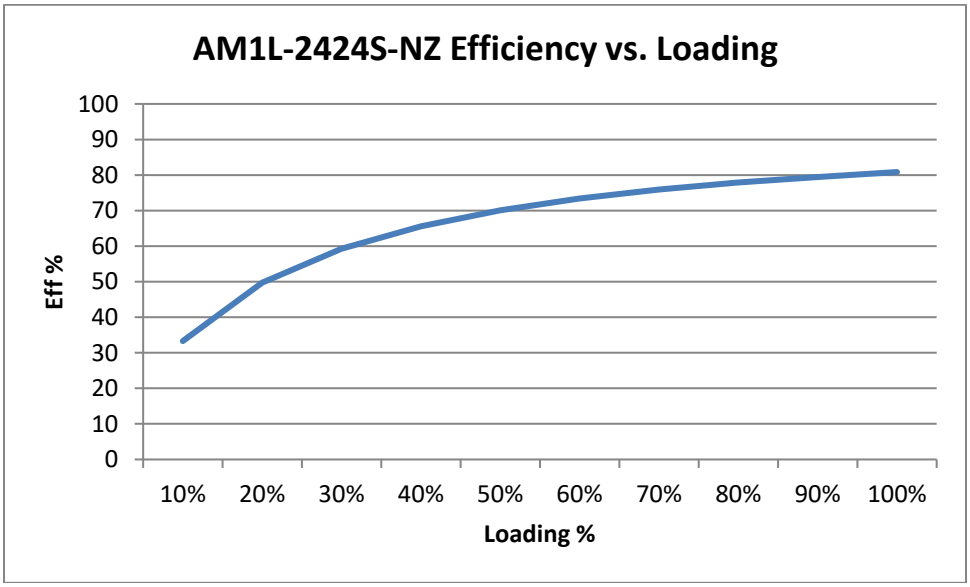

NOTE: 1. Datasheets are updated as needed and as such, specifications are subject to change without notice. Once printed or downloaded, datasheets are no longer controlled by Aimtec; refer to www.aimtec.com for the most current product specifications. **2.** Product labels shown, including safety agency certifications on labels, may vary based on the date manufactured. **3.** Mechanical drawings and specifications are for reference only. **4.** All specifications are measured at an ambient temperature of 25°C, humidity<75%, nominal input voltage and at rated output load unless otherwise specified. **5.** Aimtec may not have conducted destructive testing or chemical analysis on all internal components and chemicals at the time of publishing this document. CAS numbers and other limited information are considered proprietary and may not be available for release. **6.** This product is not designed for use in critical life support systems, equipment used in hazardous environments, nuclear control systems or other such applications which necessitate specific safety and regulatory standards other the ones listed in this datasheet. **7.** Warranty is in accordance with Aimtec's standard Terms of Sale available at www.aimtec.com.