AM1LR-JZ

Click to ORDER samples



SMD Package

The AM1LR-JZ is a 1W SMD DC/DC converter that offers great cost savings thanks to an improved manufacturing process. It also features excellent reliability and performance while offering a standard input voltage range of 5-24VDC as well as an output voltage of 3.3-15V. This compact SMD design will surely benefit your new system design.

This new series offers great operating temperatures, from -40 to 85°C with full power up to 71°C. Also, the isolations of 1500VDC and 3000VDC for improved reliability and system safety as well as a great 3,500,000h MTBF come standard.

The AM1LR-JZ is perfect for instrumentation, industrial controls, industrial applications, communication and IoT applications.

Features

- High I/O Isolation of 1500/3000VDC
- Continuous Short circuit protection
- Operating Temp: -40 °C to +85 °C
- Low profile case height: 7.25mm
- Compact footprint and high-power Density
- Efficiency up to 71%
- Regulated output

RoHS

3yr Warranty

Summary

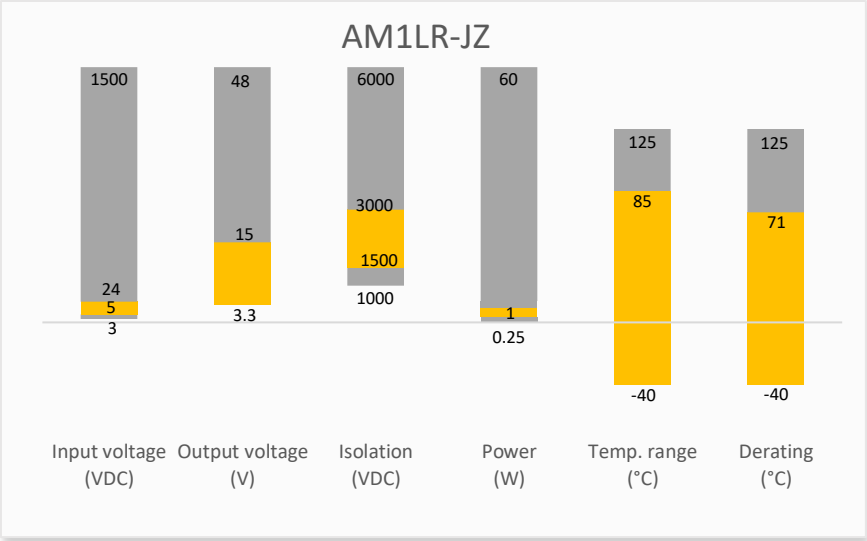

Training

Product Training Video (click to open)

Press Release

Coming Soon!

Application Notes

Applications

IoT

Industrial

Telecom

Portable Equipment

Models & Specifications

Single Output

Model	Input Voltage (VDC)	Output Voltage (VDC)	Input Current Full | No load typ. (mA)	Output Current max | min (mA)*	Isolation (VDC)	Maximum capacitive Load (µF)	Efficiency Typ. (%)
AM1LR-1205SJZ	12 (11.4-12.6)	5	121 / 8	200/20	1500	2400	69
AM1LR-1212SJZ	12 (11.4-12.6)	12	117 / 8	84/9	1500	560	71
AM1LR-1215SJZ	12 (11.4-12.6)	15	117 / 8	67/7	1500	220	71
AM1LR-1505SJZ	15 (14.25-15.75)	5	99/8	200/20	1500	2400	68
AM1LR-2405SJZ	24 (22.8-25.2)	5	60 / 4	200/20	1500	2400	69
AM1LR-2412SJZ	24 (22.8-25.2)	12	59 / 4	84/9	1500	560	71
AM1LR-2415SJZ	24 (22.8-25.2)	15	59 / 4	67/7	1500	220	71
AM1LR-0503SH30JZ	5 (4.75-5.25)	3.3	303 / 5	250 / 25	3000	2400	66
AM1LR-0505SH30JZ	5 (4.75-5.25)	5	290 / 5	200 / 20	3000	2400	69
AM1LR-0509SH30JZ	5 (4.75-5.25)	9	286 / 6	111 / 12	3000	1000	70
AM1LR-0512SH30JZ	5 (4.75-5.25)	12	282 / 9	84 / 9	3000	560	71
AM1LR-0515SH30JZ	5 (4.75-5.25)	15	282 / 9	67 / 7	3000	560	71
AM1LR-1205SH30JZ	12 (11.4-12.6)	5	121 / 8	200 / 20	3000	2400	69
AM1LR-1212SH30JZ	12 (11.4-12.6)	12	117 / 8	84 / 9	3000	560	71
AM1LR-1215SH30JZ	12 (11.4-12.6)	15	117 / 8	67 / 7	3000	220	71
AM1LR-1505SH30JZ	15 (14.25-15.75)	5	99 / 8	200 / 20	3000	2400	68
AM1LR-2405SH30JZ	24 (22.8-25.2)	5	60 / 4	200 / 20	3000	2400	69
AM1LR-2412SH30JZ	24 (22.8-25.2)	12	59 / 4	84 / 9	3000	560	71
AM1LR-2415SH30JZ	24 (22.8-25.2)	15	59 / 4	67 / 7	3000	220	71

*** Performance will be degraded if the load is not within the output current range.**
Note: Use suffix "TR" for tape & reel packing (ex. AM1LR-0505SH30JZTR).

Input Specification

Parameters	Conditions	Typical	Maximum	Units
Filter	Capacitor			
Input reflected ripple current	For 3kV, 12/15/24 Vin models	15		mA
	Others	30		mA

Isolation Specification

Parameters	Conditions	Typical	Maximum	Units
Tested I/O voltage	60 sec, leakage ≤ 1mA	>1500		VDC
	60 sec, leakage ≤ 1mA, for H30 models	>3000		VDC
Resistance	500VDC	>1000		MΩ
Capacitance	100kHz/0.1V	20		pF

Output Specification

Parameters	Conditions	Typical	Maximum	Units
Voltage accuracy	100% load		±3	%
Line regulation	Per 1% Vin change		±0.25	%

Load regulation	10-100% load, 3.3Vout		±3	%
	10-100% load, others		±2	%
Ripple & Noise*		30	100	mV pk-pk
Temperature coefficient	5Vin models	±0.03		%/°C
	Other models	±0.02		%/°C
* Ripple and Noise are measured at 20MHz bandwidth. Please refer to the application note for specific details.				

General Specifications

Parameters	Conditions	Typical	Maximum	Units
Switching frequency	Full load, nominal input, 5Vin models	250		KHz
	Full load, nominal input, other models	260		KHz
Short circuit protection	Continuous, Auto recovery			
Operating temperature	With derating at 71°C	-40 to +85		°C
Storage temperature		-55 to +125		°C
Case temperature rise	Ambient temperature at 25°C, 3.3Vout	30		°C
	Ambient temperature at 25°C, others	25		°C
Reflow soldering temperature	Maximum duration 60s when over 217°C		245	°C
Soldering method	IPC/JEDEC J-STD-020D.1.			
Cooling	Free air convection			
Humidity	Non-condensing	>5	95	% RH
Vibration	10-150Hz, 5G, 30Min, along all axis for 12/15/24Vin models only			
Moisture sensitivity level	Level 1			
Case material	Black plastic (flammability to UL 94V-0)			
Weight		1.2		g
Dimensions (L x W x H)		0.6 x 0.45 x 0.28 inches (15.24 x 11.40 x 7.25 mm)		
MTBF	3 500 000 hrs (MIL-HDBK -217F, t=+25°C) / Full Load			
NOTE: All specifications in this datasheet are measured at an ambient temperature of 25°C, humidity<75%, nominal input voltage and at rated output load unless otherwise specified.				

Safety Specifications

Parameters		
Standards	Information technology Equipment	Design to meet EN/UL62368 (5Vin models only)
	EMC - Conducted and radiated emission	CISPR32 / EN55032, class B with the recommended EMI circuit
	Electrostatic Discharge Immunity	IEC 61000-4-2 Air ±8KV, Contact ±6KV, Criteria B

Derating

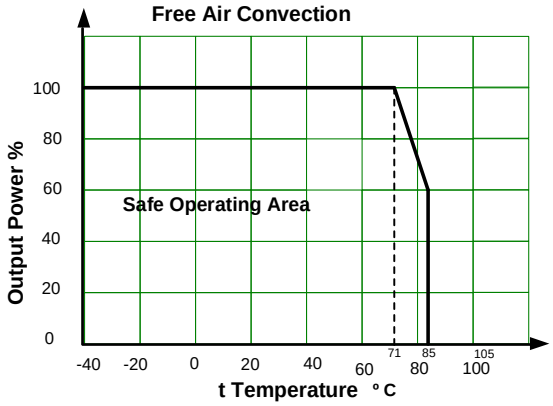

Typical application circuit

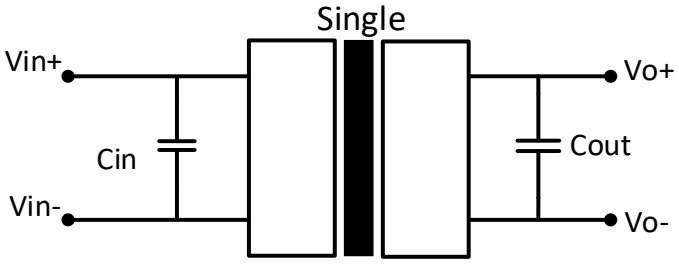

Vin	Cin	Single output models	
		Vout	Cout
12	2.2μF/16V	3.3/5V	10μF
15	1μF/25V	9/12V	2.2μF
24	1μF/50V	15V	0.47μF for 12/24Vin 1μF for 5Vin
-	-	24V	1μF

EMI Recommended circuit

5Vin models

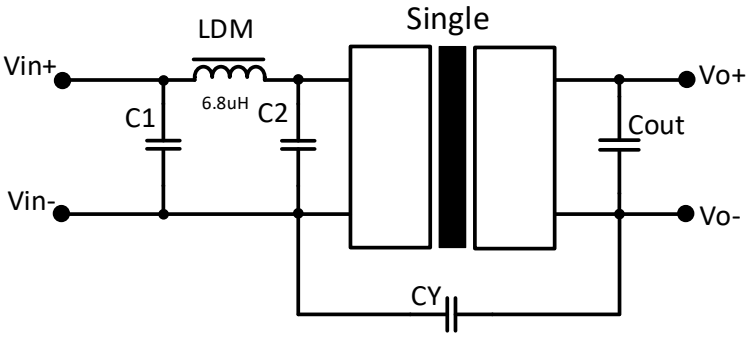

Vout	C1/C2	CY
3.3/5/9V	4.7μF/25V	47pF/4kVdc
12/15V	4.7μF/25V	1nF/4kVdc

12/15/24Vin models

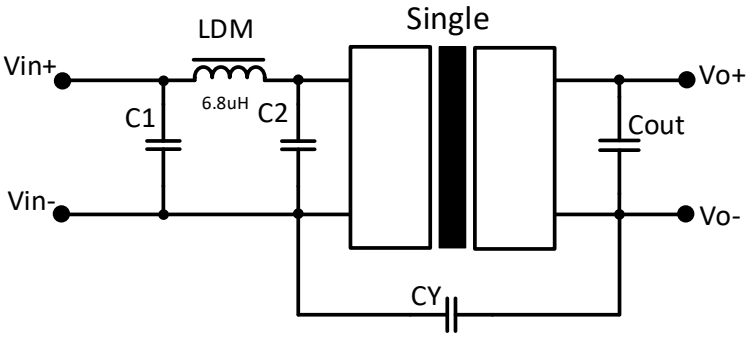

Vin	C1/C2	CY
12V/15/24V	4.7μF/50V	270pF/2kVdc

Dimensions

Pin Out Specifications	
Pin	Single
1	-V Input
2	+V Input
4	-V Output
5	-V Output
7	+V Output
10	NC

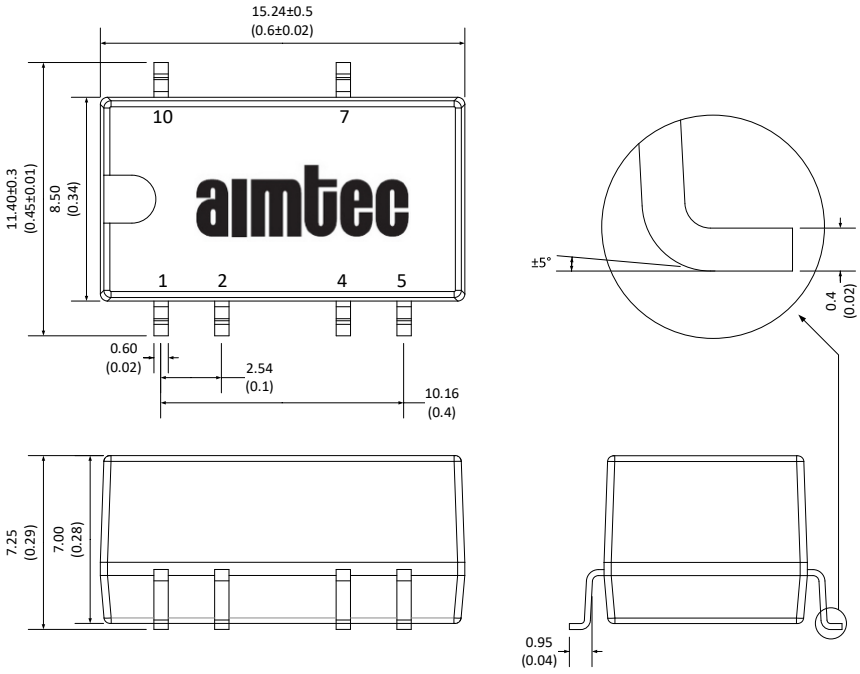

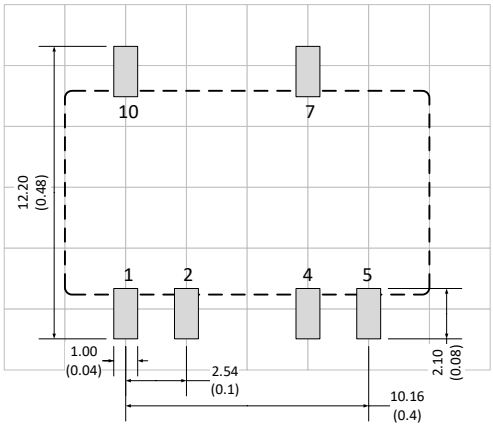

Grid size: 2.54*2.54mm

Note:
Unit: mm(inch)
General tolerance: ±0.25 (0.01)
Pin tolerance: ±0.1 (0.004)

Packing Information

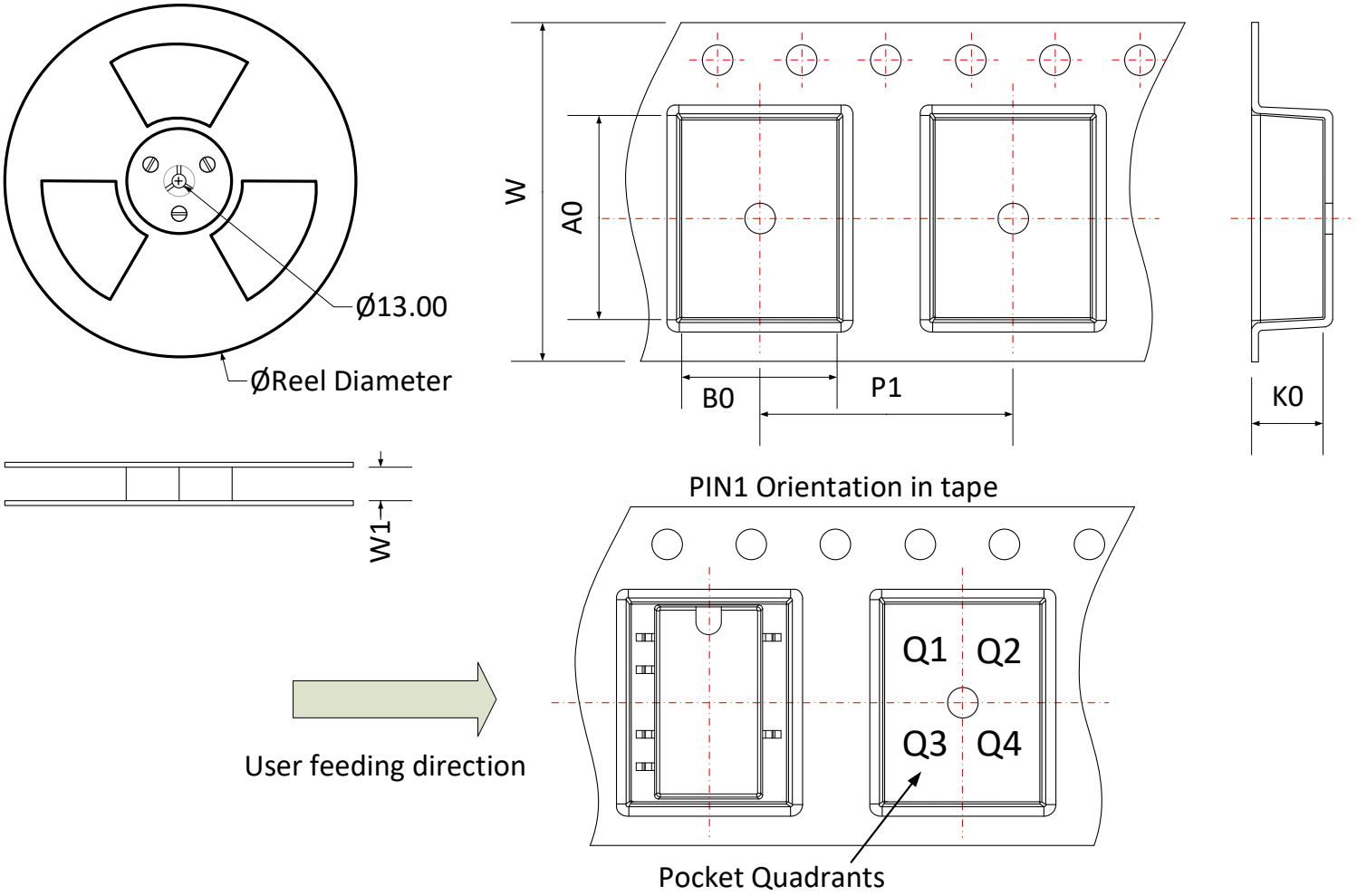

Device	Package Type	Pin	MPQ	Reel Diameter (mm)	Reel Width W1 (mm)	A0	B0	K0	P1	W	P1 Quadrant
AM1LR-JZ	SMD	6	500	330.0	24.5	15.64	12.4	7.45	16.0	24.0	Q1

NOTE: 1. Datasheets are updated as needed and as such, specifications are subject to change without notice. Once printed or downloaded, datasheets are no longer controlled by Aimtec; refer to www.aimtec.com for the most current product specifications. **2.** Product labels shown, including safety agency certifications on labels, may vary based on the date manufactured. **3.** Mechanical drawings and specifications are for reference only. **4.** All specifications are measured at an ambient temperature of 25°C, humidity<75%, nominal input voltage and at rated output load unless otherwise specified. **5.** Aimtec may not have conducted destructive testing or chemical analysis on all internal components and chemicals at the time of publishing this document. CAS numbers and other limited information are considered proprietary and may not be available for release. **6.** This product is not designed for use in critical life support systems, equipment used in hazardous environments, nuclear control systems or other such applications which necessitate specific safety and regulatory standards other the ones listed in this datasheet. **7.** Warranty is in accordance with Aimtec's standard Terms of Sale available at www.aimtec.com.