Click to ORDER samples

AM1LS-EZ



SMD Package

The AM1LS-EZ is a 1W SMD DC/DC converter that offers great cost savings thanks to an improved manufacturing process. It also features excellent reliability and performance while offering a standard input voltage range of 3.3-24VDC as well as an output voltage of 3.3-24V. This compact SMD design will surely benefit your new system design.

This new series offers great operating temperatures, from -40 to 105°C with full power up to 100°C. Also, an isolation of 1500VDC & 3000VDC for improved reliability and system safety as well as a great 3,500,000h MTBF come standard.

The AM1LS-EZ is suitable for instrumentation, industrial control, industrial applications, communication and IoT applications.

Features

- High I/O Isolation 1500VDC & 3000VDC
- Continuous Short circuit protection
- Operating Temp: -40 °C to +105 °C
- Low profile case height: 7.3mm
- Compact footprint and high-power Density
- Efficiency up to 87%
- Unregulated output
- Made in Taiwan

RoHS · 3yr Warranty · cULus · CE

Summary

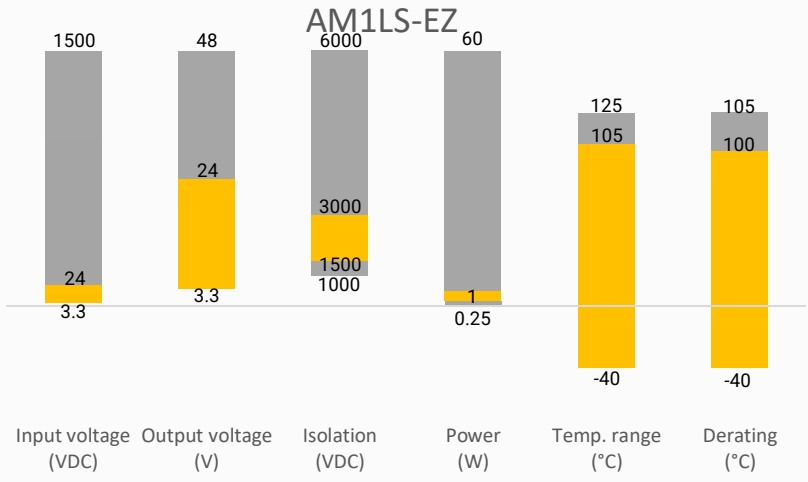

Training

Product Training Video (click to open)

Press Release

Coming Soon!

Application Notes

Applications

IoT · Industrial · Telecom · Portable Equipment

Model & Specifications

Single Output						
Model	Input Voltage (VDC)	Output Voltage (VDC)	Output Current max (mA)	Isolation (VDC)	Maximum capacitive Load (µF)	Efficiency Typ. (%)
AM1LS-0303SEZ	3.3 (2.97-3.63)	3.3	303	1500	2400	76
AM1LS-0305SEZ	3.3 (2.97-3.63)	5	200	1500	2400	82
AM1LS-0309SEZ	3.3 (2.97-3.63)	9	112	1500	1000	83
AM1LS-0312SEZ	3.3 (2.97-3.63)	12	84	1500	470	84
AM1LS-0315SEZ	3.3 (2.97-3.63)	15	67	1500	330	84
AM1LS-0324SEZ	3.3 (2.97-3.63)	24	42	1500	100	85
AM1LS-0503SEZ	5 (4.5-5.5)	3.3	303	1500	2400	76
AM1LS-0505SEZ	5 (4.5-5.5)	5	200	1500	2400	82
AM1LS-0509SEZ	5 (4.5-5.5)	9	112	1500	1000	83
AM1LS-0512SEZ	5 (4.5-5.5)	12	84	1500	470	84
AM1LS-0515SEZ	5 (4.5-5.5)	15	67	1500	330	84
AM1LS-0524SEZ	5 (4.5-5.5)	24	42	1500	100	85
AM1LS-0903SEZ	9 (8.1-9.9)	3.3	303	1500	2400	76
AM1LS-0905SEZ	9 (8.1-9.9)	5	200	1500	2400	82
AM1LS-0909SEZ	9 (8.1-9.9)	9	112	1500	1000	83
AM1LS-0912SEZ	9 (8.1-9.9)	12	84	1500	470	84
AM1LS-0915SEZ	9 (8.1-9.9)	15	67	1500	330	84
AM1LS-0924SEZ	9 (8.1-9.9)	24	42	1500	100	85
AM1LS-1203SEZ	12 (9.6-14.4)	3.3	303	1500	2400	78
AM1LS-1205SEZ	12 (9.6-14.4)	5	200	1500	2400	82
AM1LS-1209SEZ	12 (9.6-14.4)	9	112	1500	1000	85
AM1LS-1212SEZ	12 (9.6-14.4)	12	84	1500	680	85
AM1LS-1215SEZ	12 (9.6-14.4)	15	67	1500	330	87
AM1LS-1224SEZ	12 (9.6-14.4)	24	42	1500	220	85
AM1LS-1503SEZ	15 (12-18)	3.3	303	1500	2400	78
AM1LS-1505SEZ	15 (12-18)	5	200	1500	2400	82
AM1LS-1509SEZ	15 (12-18)	9	112	1500	1000	85
AM1LS-1512SEZ	15 (12-18)	12	84	1500	680	85
AM1LS-1515SEZ	15 (12-18)	15	67	1500	330	87
AM1LS-1524SEZ	15 (12-18)	24	42	1500	220	85
AM1LS-2403SEZ	24 (19.2-28.8)	3.3	303	1500	2400	78
AM1LS-2405SEZ	24 (19.2-28.8)	5	200	1500	2400	82
AM1LS-2409SEZ	24 (19.2-28.8)	9	112	1500	1000	85
AM1LS-2412SEZ	24 (19.2-28.8)	12	84	1500	680	85
AM1LS-2415SEZ	24 (19.2-28.8)	15	67	1500	330	87
AM1LS-2424SEZ	24 (19.2-28.8)	24	42	1500	220	85
AM1LS-0303SH30EZ	3.3 (2.97-3.63)	3.3	303	3000	2400	76
AM1LS-0305SH30EZ	3.3 (2.97-3.63)	5	200	3000	2400	82
AM1LS-0309SH30EZ	3.3 (2.97-3.63)	9	112	3000	1000	83
AM1LS-0312SH30EZ	3.3 (2.97-3.63)	12	84	3000	470	84
AM1LS-0315SH30EZ	3.3 (2.97-3.63)	15	67	3000	330	84
AM1LS-0324SH30EZ	3.3 (2.97-3.63)	24	42	3000	100	85
AM1LS-0503SH30EZ	5 (4.5-5.5)	3.3	303	3000	2400	76
AM1LS-0505SH30EZ	5 (4.5-5.5)	5	200	3000	2400	82
AM1LS-0509SH30EZ	5 (4.5-5.5)	9	112	3000	1000	83

AM1LS-0512SH30EZ	5 (4.5-5.5)	12	84	3000	470	84
AM1LS-0515SH30EZ	5 (4.5-5.5)	15	67	3000	330	84
AM1LS-0524SH30EZ	5 (4.5-5.5)	24	42	3000	100	85
AM1LS-0903SH30EZ	9 (8.1-9.9)	3.3	303	3000	2400	76
AM1LS-0905SH30EZ	9 (8.1-9.9)	5	200	3000	2400	82
AM1LS-0909SH30EZ	9 (8.1-9.9)	9	112	3000	1000	83
AM1LS-0912SH30EZ	9 (8.1-9.9)	12	84	3000	470	84
AM1LS-0915SH30EZ	9 (8.1-9.9)	15	67	3000	330	84
AM1LS-0924SH30EZ	9 (8.1-9.9)	24	42	3000	100	85
AM1LS-1203SH30EZ	12 (9.6-14.4)	3.3	303	3000	2400	78
AM1LS-1205SH30EZ	12 (9.6-14.4)	5	200	3000	2400	82
AM1LS-1209SH30EZ	12 (9.6-14.4)	9	112	3000	1000	85
AM1LS-1212SH30EZ	12 (9.6-14.4)	12	84	3000	680	85
AM1LS-1215SH30EZ	12 (9.6-14.4)	15	67	3000	330	87
AM1LS-1224SH30EZ	12 (9.6-14.4)	24	42	3000	220	85
AM1LS-1503SH30EZ	15 (12-18)	3.3	303	3000	2400	78
AM1LS-1505SH30EZ	15 (12-18)	5	200	3000	2400	82
AM1LS-1509SH30EZ	15 (12-18)	9	112	3000	1000	85
AM1LS-1512SH30EZ	15 (12-18)	12	84	3000	680	85
AM1LS-1515SH30EZ	15 (12-18)	15	67	3000	330	87
AM1LS-1524SH30EZ	15 (12-18)	24	42	3000	220	85
AM1LS-2403SH30EZ	24 (19.2-28.8)	3.3	303	3000	2400	78
AM1LS-2405SH30EZ	24 (19.2-28.8)	5	200	3000	2400	82
AM1LS-2409SH30EZ	24 (19.2-28.8)	9	112	3000	1000	85
AM1LS-2412SH30EZ	24 (19.2-28.8)	12	84	3000	680	85
AM1LS-2415SH30EZ	24 (19.2-28.8)	15	67	3000	330	87
AM1LS-2424SH30EZ	24 (19.2-28.8)	24	42	3000	220	85
Note: Use suffix “TR” for tape & reel packing (ex. AM1LS-0505SEZTR).						

Dual Output						
Model	Input Voltage (VDC)	Output Voltage (VDC)	Output Current max (mA)	Isolation (VDC)	Maximum capacitive Load (µF)	Efficiency Typ. (%)
AM1LS-0303DEZ	3.3 (2.97-3.63)	±3.3	±151	1500	±1200	76
AM1LS-0305DEZ	3.3 (2.97-3.63)	±5	±100	1500	±1200	82
AM1LS-0309DEZ	3.3 (2.97-3.63)	±9	±56	1500	±470	83
AM1LS-0312DEZ	3.3 (2.97-3.63)	±12	±42	1500	±220	84
AM1LS-0315DEZ	3.3 (2.97-3.63)	±15	±34	1500	±100	84
AM1LS-0324DEZ	3.3 (2.97-3.63)	±24	±21	1500	±47	85
AM1LS-0503DEZ	5 (4.5-5.5)	±3.3	±151	1500	±1200	76
AM1LS-0505DEZ	5 (4.5-5.5)	±5	±100	1500	±1200	82
AM1LS-0509DEZ	5 (4.5-5.5)	±9	±56	1500	±470	83
AM1LS-0512DEZ	5 (4.5-5.5)	±12	±42	1500	±220	84
AM1LS-0515DEZ	5 (4.5-5.5)	±15	±34	1500	±100	84
AM1LS-0524DEZ	5 (4.5-5.5)	±24	±21	1500	±47	85
AM1LS-0903DEZ	9 (8.1-9.9)	±3.3	±151	1500	±1200	76
AM1LS-0905DEZ	9 (8.1-9.9)	±5	±100	1500	±1200	82
AM1LS-0909DEZ	9 (8.1-9.9)	±9	±56	1500	±470	83
AM1LS-0912DEZ	9 (8.1-9.9)	±12	±42	1500	±220	84
AM1LS-0915DEZ	9 (8.1-9.9)	±15	±34	1500	±100	84
AM1LS-0924DEZ	9 (8.1-9.9)	±24	±21	1500	±47	85
AM1LS-1203DEZ	12 (9.6-14.4)	±3.3	±151	1500	±1200	78

AM1LS-1205DEZ	12 (9.6-14.4)	±5	±100	1500	±1200	82
AM1LS-1209DEZ	12 (9.6-14.4)	±9	±56	1500	±680	85
AM1LS-1212DEZ	12 (9.6-14.4)	±12	±42	1500	±330	85
AM1LS-1215DEZ	12 (9.6-14.4)	±15	±34	1500	±220	87
AM1LS-1224DEZ	12 (9.6-14.4)	±24	±21	1500	±100	85
AM1LS-1503DEZ	15 (12-18)	±3.3	±151	1500	±1200	78
AM1LS-1505DEZ	15 (12-18)	±5	±100	1500	±1200	82
AM1LS-1509DEZ	15 (12-18)	±9	±56	1500	±680	85
AM1LS-1512DEZ	15 (12-18)	±12	±42	1500	±330	85
AM1LS-1515DEZ	15 (12-18)	±15	±34	1500	±220	87
AM1LS-1524DEZ	15 (12-18)	±24	±21	1500	±100	85
AM1LS-2403DEZ	24 (19.2-28.8)	±3.3	±151	1500	±1200	78
AM1LS-2405DEZ	24 (19.2-28.8)	±5	±100	1500	±1200	82
AM1LS-2409DEZ	24 (19.2-28.8)	±9	±56	1500	±680	85
AM1LS-2412DEZ	24 (19.2-28.8)	±12	±42	1500	±330	85
AM1LS-2415DEZ	24 (19.2-28.8)	±15	±34	1500	±220	87
AM1LS-2424DEZ	24 (19.2-28.8)	±24	±21	1500	±100	85
AM1LS-0303DH30EZ	3.3 (2.97-3.63)	±3.3	±151	3000	±1200	76
AM1LS-0305DH30EZ	3.3 (2.97-3.63)	±5	±100	3000	±1200	82
AM1LS-0309DH30EZ	3.3 (2.97-3.63)	±9	±56	3000	±470	83
AM1LS-0312DH30EZ	3.3 (2.97-3.63)	±12	±42	3000	±220	84
AM1LS-0315DH30EZ	3.3 (2.97-3.63)	±15	±34	3000	±100	84
AM1LS-0324DH30EZ	3.3 (2.97-3.63)	±24	±21	3000	±47	85
AM1LS-0503DH30EZ	5 (4.5-5.5)	±3.3	±151	3000	±1200	76
AM1LS-0505DH30EZ	5 (4.5-5.5)	±5	±100	3000	±1200	82
AM1LS-0509DH30EZ	5 (4.5-5.5)	±9	±56	3000	±470	83
AM1LS-0512DH30EZ	5 (4.5-5.5)	±12	±42	3000	±220	84
AM1LS-0515DH30EZ	5 (4.5-5.5)	±15	±34	3000	±100	84
AM1LS-0524DH30EZ	5 (4.5-5.5)	±24	±21	3000	±47	85
AM1LS-0903DH30EZ	9 (8.1-9.9)	±3.3	±151	3000	±1200	76
AM1LS-0905DH30EZ	9 (8.1-9.9)	±5	±100	3000	±1200	82
AM1LS-0909DH30EZ	9 (8.1-9.9)	±9	±56	3000	±470	83
AM1LS-0912DH30EZ	9 (8.1-9.9)	±12	±42	3000	±220	84
AM1LS-0915DH30EZ	9 (8.1-9.9)	±15	±34	3000	±100	84
AM1LS-0924DH30EZ	9 (8.1-9.9)	±24	±21	3000	±47	85
AM1LS-1203DH30EZ	12 (9.6-14.4)	±3.3	±151	3000	±1200	78
AM1LS-1205DH30EZ	12 (9.6-14.4)	±5	±100	3000	±1200	82
AM1LS-1209DH30EZ	12 (9.6-14.4)	±9	±56	3000	±680	85
AM1LS-1212DH30EZ	12 (9.6-14.4)	±12	±42	3000	±330	85
AM1LS-1215DH30EZ	12 (9.6-14.4)	±15	±34	3000	±220	87
AM1LS-1224DH30EZ	12 (9.6-14.4)	±24	±21	3000	±100	85
AM1LS-1503DH30EZ	15 (12-18)	±3.3	±151	3000	±1200	78
AM1LS-1505DH30EZ	15 (12-18)	±5	±100	3000	±1200	82
AM1LS-1509DH30EZ	15 (12-18)	±9	±56	3000	±680	85
AM1LS-1512DH30EZ	15 (12-18)	±12	±42	3000	±330	85
AM1LS-1515DH30EZ	15 (12-18)	±15	±34	3000	±220	87
AM1LS-1524DH30EZ	15 (12-18)	±24	±21	3000	±100	85
AM1LS-2403DH30EZ	24 (19.2-28.8)	±3.3	±151	3000	±1200	78
AM1LS-2405DH30EZ	24 (19.2-28.8)	±5	±100	3000	±1200	82
AM1LS-2409DH30EZ	24 (19.2-28.8)	±9	±56	3000	±680	85
AM1LS-2412DH30EZ	24 (19.2-28.8)	±12	±42	3000	±330	85
AM1LS-2415DH30EZ	24 (19.2-28.8)	±15	±34	3000	±220	87

AM1LS-2424DH30EZ	24 (19.2-28.8)	±24	±21	3000	±100	85

Note: Use suffix "TR" for tape & reel packing (ex. AM1LS-0505DEZTR).

Input Specification

Parameters	Conditions	Typical	Maximum	Units
Filter	Capacitor			
Absolute maximum rating	Maximum duration 1s, 3.3Vin models	> -0.7	5	VDC
	Maximum duration 1s, 5Vin models	> -0.7	9	VDC
	Maximum duration 1s, 9Vin models	> -0.7	15	VDC
	Maximum duration 1s, 12Vin models	> -0.7	18	VDC
	Maximum duration 1s, 15Vin models	> -0.7	21	VDC
	Maximum duration 1s, 24Vin models	> -0.7	30	VDC
Input reflected ripple current		15	--	mA

Isolation Specification

Parameters	Conditions	Typical	Maximum	Units
Tested I/O voltage	60 sec, leakage ≤ 0.5mA	>1500	--	VDC
	60 sec, leakage ≤ 0.5mA for H30 models	>3000	--	VDC
Resistance	500VDC	>1000	--	MΩ
Capacitance	I/O 100kHz/0.1V	20	--	pF

Output Specification

Parameters	Conditions	Typical	Maximum	Units
Voltage accuracy	100% load	--	±5	%
Line regulation	Per 1% Vin change	1.2	--	%
Load regulation	10-100% load, 3.3Vout models	15	20	%
	10-100% load, 5Vout models	10	15	%
	10-100% load, 9Vout models	8	10	%
	10-100% load, 12Vout models	7	10	%
	10-100% load, 15Vout models	6	10	%
	10-100% load, 24Vout models	5	10	%
Ripple & Noise*	24Vout models	50	100	mV pk-pk
	Others	30	75	mV pk-pk
Minimum load**	--	10	--	%

*** Ripple and Noise are measured at 20MHz bandwidth. Please refer to the application note for specific details.**
**** If the required power is less than 1% of the rated converter output, connect a bleeder resistor in parallel with the load to satisfy the minimum load requirement.**

General Specifications

Parameters	Conditions	Typical	Maximum	Units
Switching frequency	Full load, nominal input, 3.3Vin models	215	--	KHz
	Full load, nominal input, 5Vin models	370	--	KHz
	Full load, nominal input, others	250	--	KHz
Short circuit protection	Continuous, Self-recovery			
Operating temperature	With derating at 100°C	-40 to +105	--	°C
Storage temperature	--	-55 to +125	--	°C
Cooling	Free air convection			

Humidity	Non-condensing		95	% RH
Case material	DAP			
Weight	Single output, 24Vin models, 24Vout models	1.28	--	g
	Single output, Others	1.2	--	g
	Dual output models	1.36	--	g
Dimensions (L x W x H)	Single output, 24Vin models, 24Vout models	0.50 x 0.44 x 0.28 inches (12.80 x 11.10 x 7.10 mm)		
	Single output, Others	0.50 x 0.44 x 0.25 inches (12.70 x 11.05 x 6.25 mm)		
	Dual output models	0.60 x 0.43 x 0.29 inches (15.24 x 11.00 x 7.30 mm)		
MTBF	3 500 000 hrs (MIL-HDBK -217F, t=+25°C) / Full Load			
NOTE: All specifications in this datasheet are measured at an ambient temperature of 25°C, humidity<75%, nominal input voltage and at rated output load unless otherwise specified.				

Safety Specifications

Parameters		
Agency approval	IEC/EN/UL 62368-1 (For Single output models only)	
Standards	Information technology Equipment	Designed to meet IEC/EN/UL 62368-1
	EMC - Conducted and radiated emission	CISPR32 / EN55032, class B with the recommended EMI circuit
	Electrostatic Discharge Immunity	IEC 61000-4-2 Air ±8KV, Contact ±6KV, Criteria B

Derating

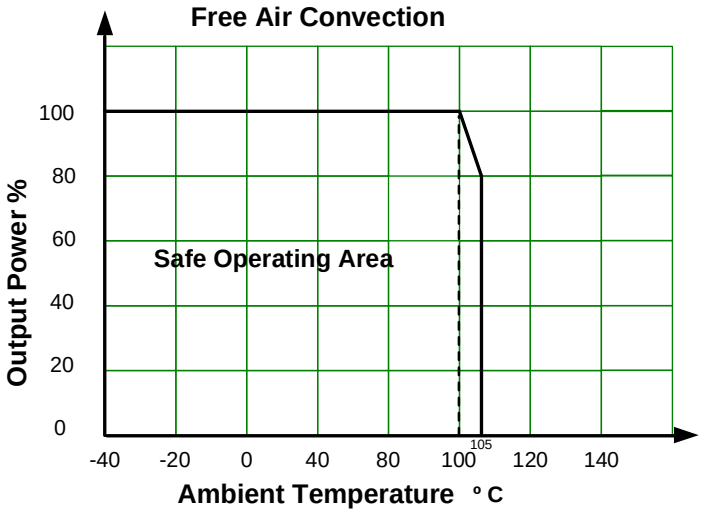

Output voltage tolerance

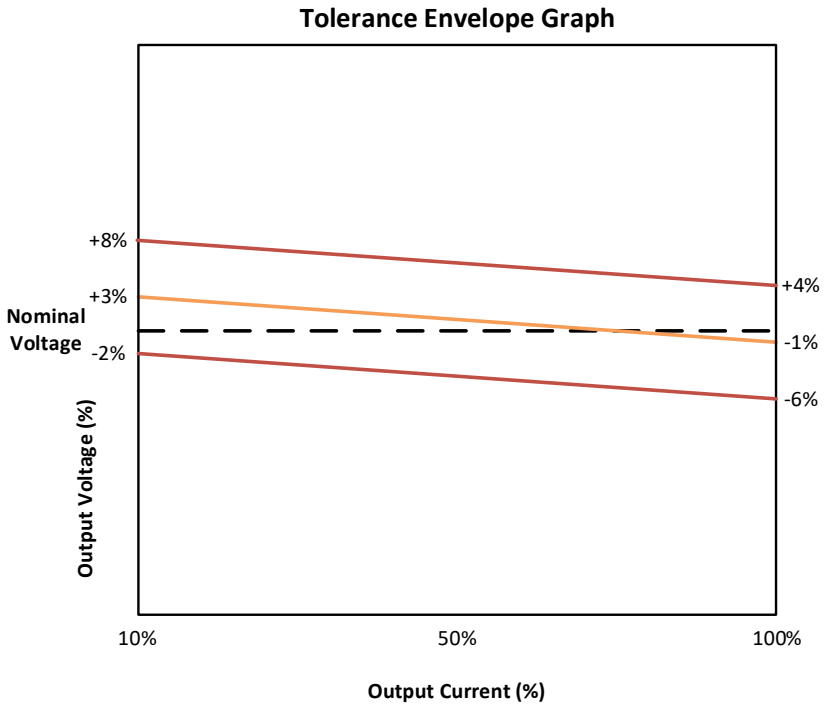

Typical application circuit

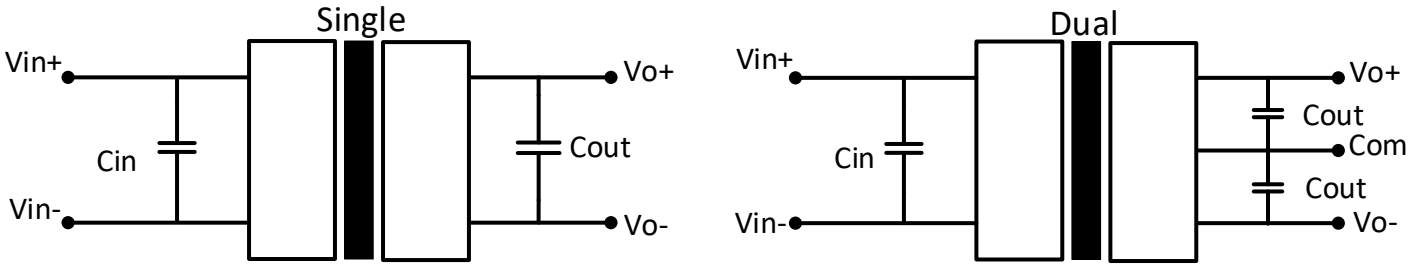

Vin	Cin	Single output models		Dual output models	
		Vout	Cout	Vout	Cout
3.3V	4.7μF/25V	3.3V	10μF/16V	±3.3V	±4.7μF/16V
5V	4.7μF/25V	5V	10μF/16V	±5V	±4.7μF/16V
9V	4.7μF/25V	9V	2.2μF/16V	±9V	±1μF/16V
12V	2.2μF/25V	12V	2.2μF/25V	±12V	±1μF/25V
15V	2.2μF/25V	15V	1μF/25V	±15V	±1μF/25V
24V	1μF/50V	24V	1μF/50V	±24V	±1μF/50V

EMI Recommended circuit

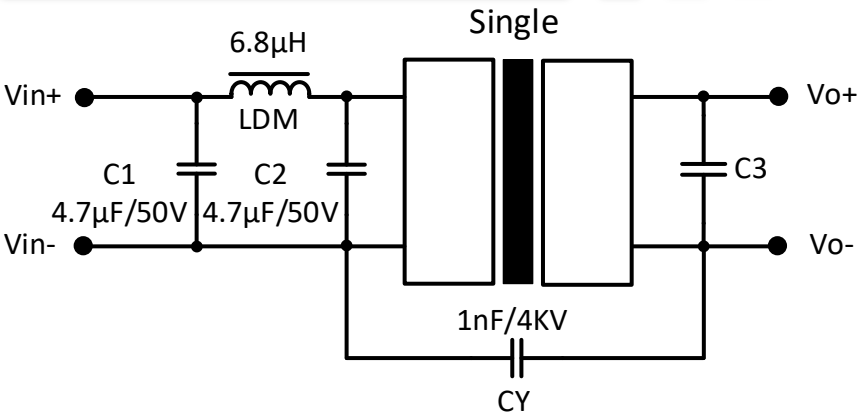

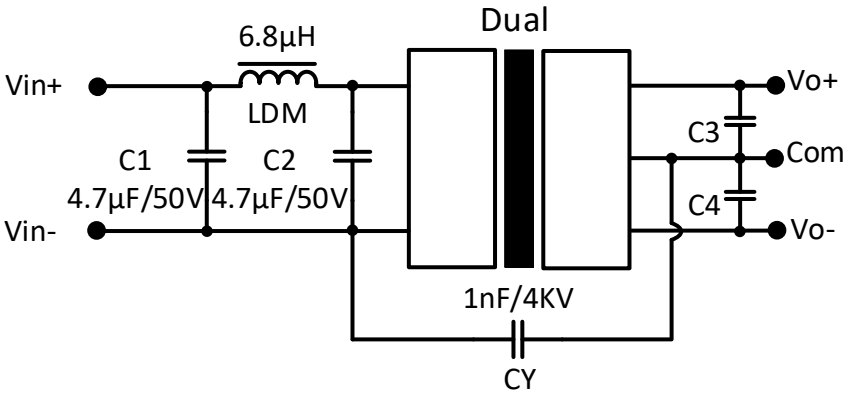

C3/C4: Refer to Cout in typical circuit.

Dimensions

For single output 24Vin models and for 24Vout models

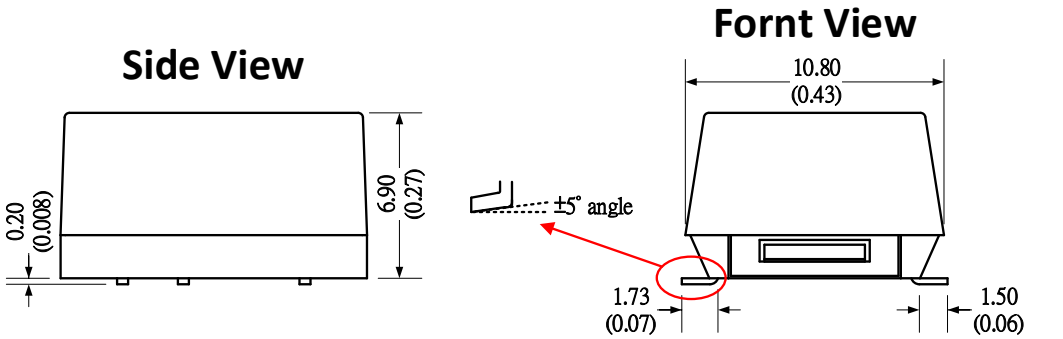

Pin Out Specifications	
Pin	Single
1	-V Input
2	+V Input
3	-
4	-V Output
5	+V Output
6	-
7	-
8	NC

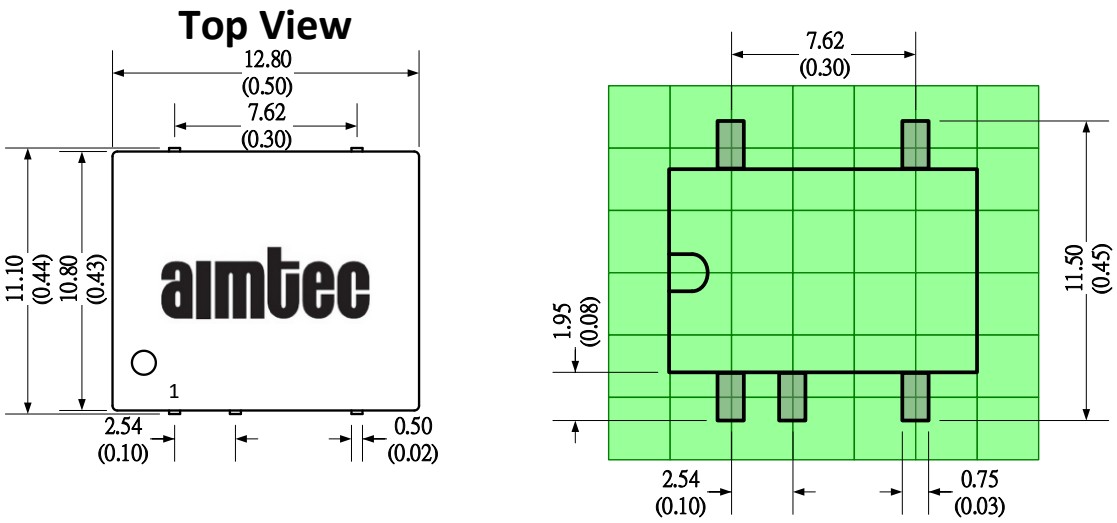

Note:
Unit: mm(inch)
General tolerance: ±0.25 (0.01)
Pin tolerance: ±0.1 (0.004)

For single output other models

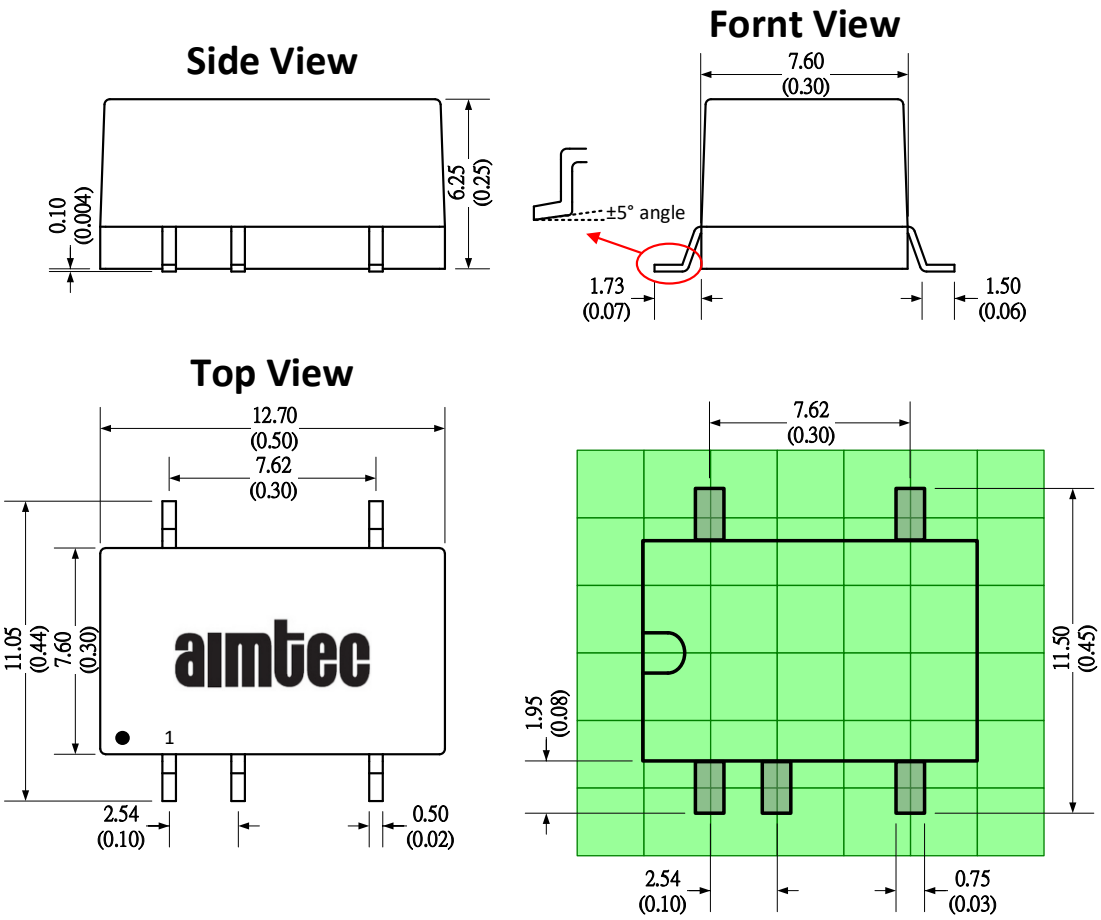

Pin Out Specifications	
Pin	Single
1	-V Input
2	+V Input
3	-
4	-V Output
5	+V Output
6	-
7	-
8	NC

Note:
Unit: mm(inch)
General tolerance: ±0.25 (0.01)
Pin tolerance: ±0.1 (0.004)

For Dual output models

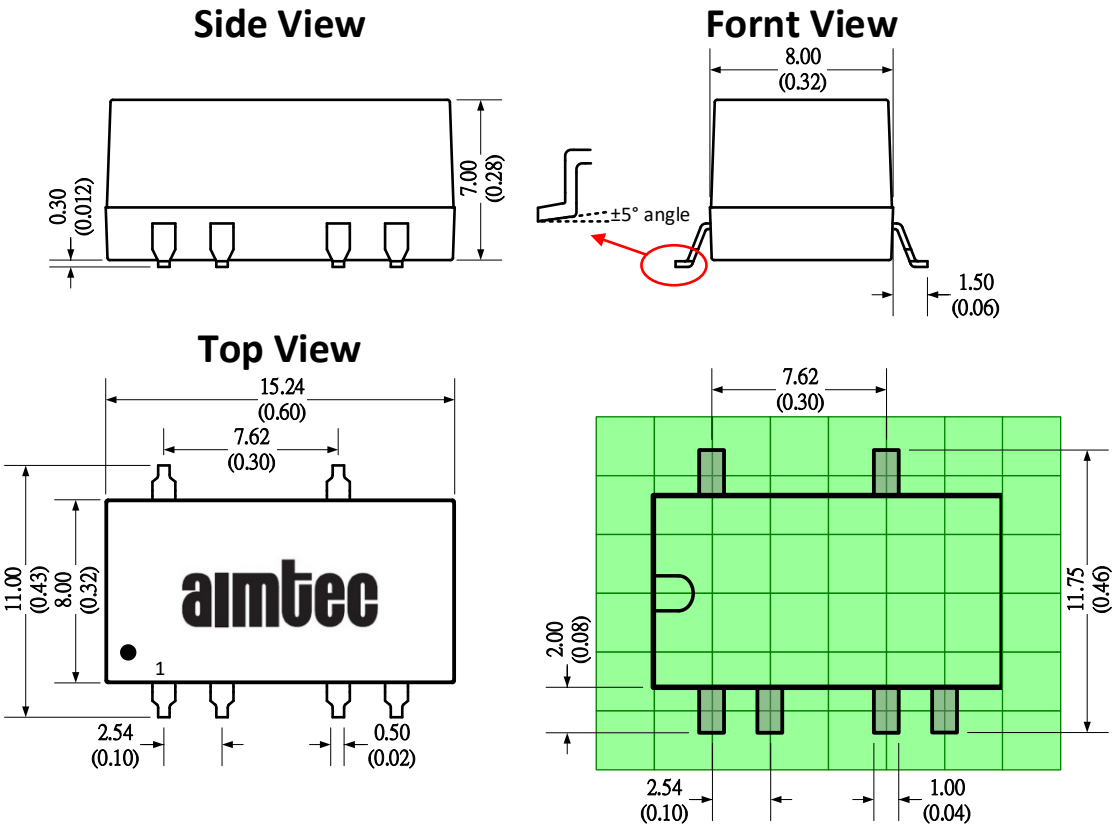

Pin Out Specifications	
Pin	Dual
1	-V Input
2	+V Input
3	-
4	Common
5	-V Output
6	-
7	+V Output
8	-
9	-
10	NC

Note:
Unit: mm(inch)
General tolerance: ±0.25 (0.01)
Pin tolerance: ±0.1 (0.004)

Packing Information

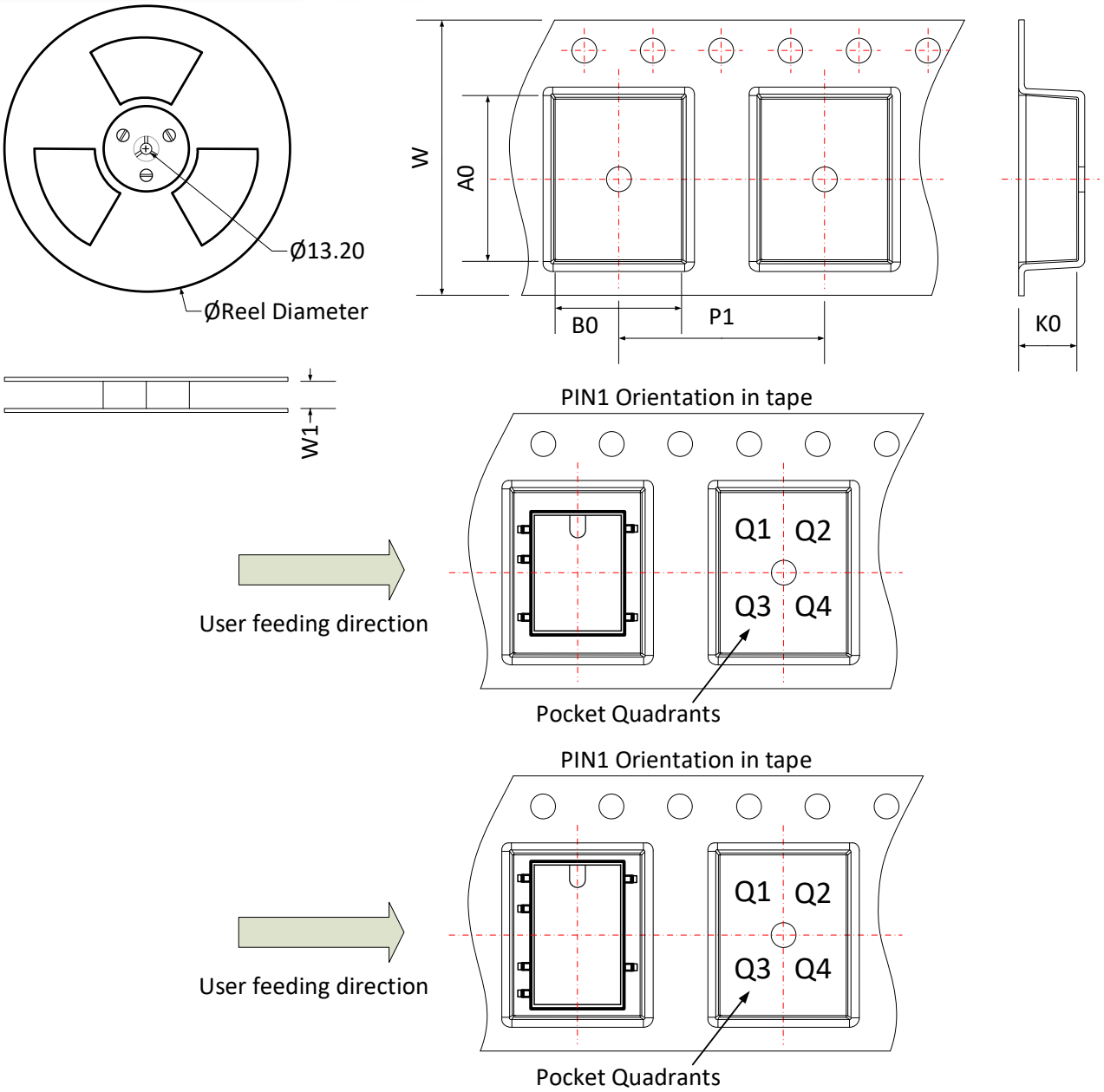

Device	Package Type	Pin	MPQ	Reel Diameter (mm)	Reel Width W1 (mm)	A0	B0	K0	P1	W	P1 Quadrant
AM1LS-EZ Single output	SMD	5	500	330.0	24.4	13.5	12.0	7.0	16.0	24.0	Q1
AM1LS-EZ Dual output	SMD	6	500	380.0	32.4	15.85	11.6	8.8	16.0	32.0	Q1

NOTE: 1. Datasheets are updated as needed and as such, specifications are subject to change without notice. Once printed or downloaded, datasheets are no longer controlled by Aimtec; refer to www.aimtec.com for the most current product specifications. **2.** Product label shown, including safety agency certifications on label, may vary based on the date manufactured. **3.** Mechanical drawings and specifications are for reference only. **4.** All specifications are measured at an ambient temperature of 25°C, humidity<75%, nominal input voltage and at rated output load unless otherwise specified. **5.** Aimtec may not have conducted destructive testing or chemical analysis on all internal components and chemical at the time of publishing this document. CAS numbers and other limited information are considered proprietary and may not be available for release. **6.** This product is not designed for use in critical life support systems, equipment used in hazardous environments, nuclear control systems or other such applications which necessitate specific safety and regulatory standards other the ones listed in this datasheet. **7.** Warranty is in accordance with Aimtec's standard Terms of Sale available at www.aimtec.com.