AM1LS-JZ

Click to ORDER samples

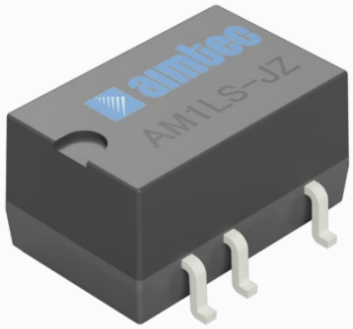

SMD Package

The AM1LS-JZ is a 1W SMD DC/DC converter that offers great cost savings thanks to an improved manufacturing process. It also features excellent reliability and performance while offering a standard input voltage range of 3.3-24VDC as well as an output voltage of 3.3-24V. This compact SMD design will surely benefit your new system design.

This new series offers great operating temperatures, from -40 to 105°C with full power up to 100°C. Also, an isolation of 1500VDC & 3000VDC for improved reliability and system safety as well as a great 3,500,000h MTBF come standard.

The AM1LS-JZ is suitable for instrumentation, industrial controls, industrial applications, communication and IoT applications.

Features

- High I/O Isolation 1500VDC & 3000VDC
- Continuous Short circuit protection
- Operating Temp: -40 °C to +105 °C
- Low profile case height: 7.25mm
- Compact footprint and high-power Density
- Efficiency up to 85%
- Unregulated output

RoHS

3yr Warranty

Summary

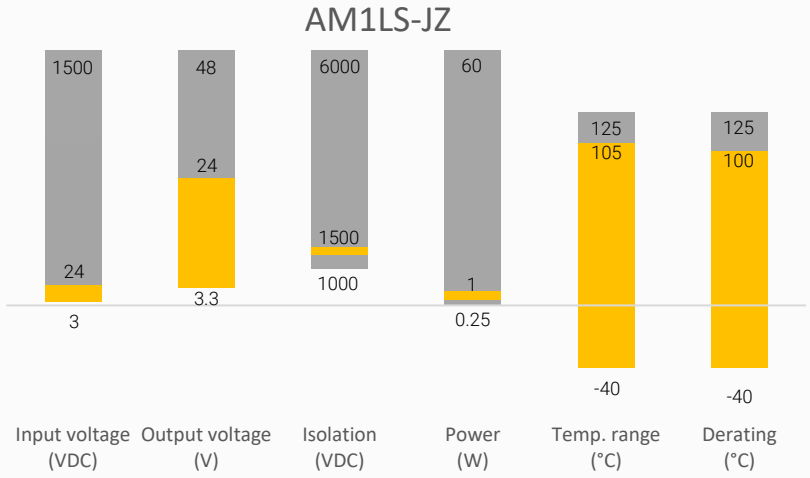

Training



Product Training Video (click to open)

Press Release

Coming Soon!

Application Notes

Applications

IoT

Industrial

Telecom

Portable Equipment

Models & Specifications

Single Output							
Model	Input Voltage (VDC)	Output Voltage (VDC)	Input Current Full | No load max (mA)	Output Current max | min (mA)	Isolation (VDC)	Maximum capacitive Load (µF)	Efficiency Typ. (%)
AM1LS-0303SJZ	3.3 (2.97-3.63)	3.3	416 / -	303 / 30	1500	2400	77
AM1LS-0305SJZ	3.3 (2.97-3.63)	5	389 / -	200 / 20	1500	2400	82
AM1LS-0309SJZ	3.3 (2.97-3.63)	9	379 / -	111 / 11	1500	1000	84
AM1LS-0312SJZ ※	3.3 (2.97-3.63)	12	379 / -	83 / 8	1500	560	84
AM1LS-0315SJZ ※	3.3 (2.97-3.63)	15	379 / -	67 / 7	1500	560	84
AM1LS-0324SJZ ※	3.3 (2.97-3.63)	24	379 / -	42 / 4	1500	220	84
AM1LS-0503SJZ	5 (4.5-5.5)	3.3	286 / 10	303 / 30	1500	2400	74
AM1LS-0505SJZ	5 (4.5-5.5)	5	286 / 10	200 / 20	1500	2400	82
AM1LS-0509SJZ	5 (4.5-5.5)	9	254 / 20	111 / 12	1500	1000	83
AM1LS-0512SJZ	5 (4.5-5.5)	12	254 / 20	84 / 9	1500	560	83
AM1LS-0515SJZ	5 (4.5-5.5)	15	254 / 30	67 / 7	1500	560	83
AM1LS-0524SJZ	5 (4.5-5.5)	24	254 / 30	42 / 4	1500	220	85
AM1LS-1205SJZ	12 (10.8-13.2)	5	107 / -	200 / 20	1500	2400	82
AM1LS-1209SJZ	12 (10.8-13.2)	9	106 / -	111 / 12	1500	1000	83
AM1LS-1212SJZ	12 (10.8-13.2)	12	106 / -	84 / 9	1500	560	83
AM1LS-1215SJZ	12 (10.8-13.2)	15	106 / -	67 / 7	1500	560	83
AM1LS-1224SJZ	12 (10.8-13.2)	24	103 / -	42 / 4	1500	220	85
AM1LS-1505SJZ	15 (13.5-16.5)	5	86 / -	200 / 20	1500	2400	82
AM1LS-1509SJZ ※	15 (13.5-16.5)	9	86 / -	111 / 12	1500	1000	82
AM1LS-1515SJZ	15 (13.5-16.5)	15	85 / -	67 / 7	1500	560	83
AM1LS-2405SJZ	24 (21.6-26.4)	5	57 / -	200 / 20	1500	2400	80
AM1LS-2409SJZ	24 (21.6-26.4)	9	55 / -	111 / 12	1500	1000	80
AM1LS-2412SJZ	24 (21.6-26.4)	12	55 / -	84 / 9	1500	560	80
AM1LS-2415SJZ	24 (21.6-26.4)	15	55 / -	67 / 7	1500	560	80
AM1LS-2424SJZ	24 (21.6-26.4)	24	57 / -	42 / 4	1500	220	80
AM1LS-0303SH30JZ	3.3 (2.97-3.63)	3.3	416 / -	303 / 30	3000	2400	77
AM1LS-0305SH30JZ	3.3 (2.97-3.63)	5	389 / -	200 / 20	3000	2400	82
AM1LS-0309SH30JZ	3.3 (2.97-3.63)	9	379 / -	111 / 11	3000	1000	84
AM1LS-0312SH30JZ ※	3.3 (2.97-3.63)	12	379 / -	83 / 8	3000	560	84
AM1LS-0315SH30JZ ※	3.3 (2.97-3.63)	15	379 / -	67 / 7	3000	560	84
AM1LS-0324SH30JZ ※	3.3 (2.97-3.63)	24	379 / -	42 / 4	3000	220	84
AM1LS-0503SH30JZ	5 (4.5-5.5)	3.3	286 / 10	303 / 30	3000	2400	74
AM1LS-0505SH30JZ	5 (4.5-5.5)	5	286 / 10	200 / 20	3000	2400	82
AM1LS-0509SH30JZ	5 (4.5-5.5)	9	254 / 20	111 / 12	3000	1000	83
AM1LS-0512SH30JZ	5 (4.5-5.5)	12	254 / 20	84 / 9	3000	560	83
AM1LS-0515SH30JZ	5 (4.5-5.5)	15	254 / 30	67 / 7	3000	560	83
AM1LS-0524SH30JZ	5 (4.5-5.5)	24	254 / 30	42 / 4	3000	220	85
AM1LS-1203SH30JZ ※	12 (10.8-13.2)	3.3	116 / -	303 / 30	3000	2400	76
AM1LS-1205SH30JZ	12 (10.8-13.2)	5	107 / -	200 / 20	3000	2400	82
AM1LS-1209SH30JZ	12 (10.8-13.2)	9	106 / -	111 / 12	3000	1000	83
AM1LS-1212SH30JZ	12 (10.8-13.2)	12	106 / -	84 / 9	3000	560	83
AM1LS-1215SH30JZ	12 (10.8-13.2)	15	106 / -	67 / 7	3000	560	83
AM1LS-1224SH30JZ	12 (10.8-13.2)	24	103 / -	42 / 4	3000	220	85

AM1LS-1505SH30JZ	15 (13.5-16.5)	5	86 / -	200 / 20	3000	2400	82
AM1LS-1509SH30JZ ※	15 (13.5-16.5)	9	86 / -	111 / 12	3000	1000	82
AM1LS-1515SH30JZ	15 (13.5-16.5)	15	85 / -	67 / 7	3000	560	83
AM1LS-2403SH30JZ ※	24 (21.6-26.4)	3.3	58 / -	303 / 30	3000	2400	76
AM1LS-2405SH30JZ	24 (21.6-26.4)	5	57 / -	200 / 20	3000	2400	80
AM1LS-2409SH30JZ	24 (21.6-26.4)	9	55 / -	111 / 12	3000	1000	80
AM1LS-2412SH30JZ	24 (21.6-26.4)	12	55 / -	84 / 9	3000	560	80
AM1LS-2415SH30JZ	24 (21.6-26.4)	15	55 / -	67 / 7	3000	560	80
AM1LS-2424SH30JZ	24 (21.6-26.4)	24	57 / -	42 / 4	3000	220	80
Note: Use suffix “TR” for tape & reel packing (ex. AM1LS-0503SJZTR).							

Dual Output

Model	Input Voltage (VDC)	Output Voltage (VDC)	Input Current Full | No load max (mA)	Output Current max | min (mA)	Isolation (VDC)	Maximum capacitive Load (µF)	Efficiency Typ. (%)
AM1LS-0303DJZ ※	3.3 (2.97-3.63)	±3.3	416 / -	±152/±15	1500	±1200	77
AM1LS-0305DJZ ※	3.3 (2.97-3.63)	±5	389 / -	±100/±10	1500	±1200	82
AM1LS-0309DJZ ※	3.3 (2.97-3.63)	±9	389 / -	±56/±5	1500	±470	82
AM1LS-0312DJZ ※	3.3 (2.97-3.63)	±12	389 / -	±42/±5	1500	±220	82
AM1LS-0315DJZ ※	3.3 (2.97-3.63)	±15	389 / -	±34/±4	1500	±220	82
AM1LS-0324DJZ ※	3.3 (2.97-3.63)	±24	379 / -	±21/±2	1500	±100	84
AM1LS-0505DJZ	5 (4.5-5.5)	±5	257 / 10	±100/±10	1500	±1200	82
AM1LS-0509DJZ	5 (4.5-5.5)	±9	254 / 20	±56/±6	1500	±470	83
AM1LS-0512DJZ	5 (4.5-5.5)	±12	254 / 20	±42/±5	1500	±220	83
AM1LS-0515DJZ	5 (4.5-5.5)	±15	254 / 30	±34/±4	1500	±220	83
AM1LS-0524DJZ	5 (4.5-5.5)	±24	254 / 30	±21/±3	1500	±100	85
AM1LS-1205DJZ	12 (10.8-13.2)	±5	107 / -	±100/±10	1500	±1200	82
AM1LS-1207DJZ ※	12 (10.8-13.2)	±7.5	107 / -	±67/±7	1500	±470	82
AM1LS-1209DJZ	12 (10.8-13.2)	±9	106 / -	±56/±6	1500	±470	83
AM1LS-1212DJZ	12 (10.8-13.2)	±12	106 / -	±42/±5	1500	±220	83
AM1LS-1215DJZ	12 (10.8-13.2)	±15	106 / -	±34/±4	1500	±220	83
AM1LS-1224DJZ	12 (10.8-13.2)	±24	103 / -	±21/±3	1500	±100	85
AM1LS-1515DJZ	15 (13.5-16.5)	±15	85 / -	±34/±4	1500	±220	83
AM1LS-2405DJZ	24 (21.6-26.4)	±5	55 / -	±100/±10	1500	±1200	82
AM1LS-2409DJZ	24 (21.6-26.4)	±9	55 / -	±56/±6	1500	±470	83
AM1LS-2412DJZ	24 (21.6-26.4)	±12	55 / -	±42/±5	1500	±220	83
AM1LS-2415DJZ	24 (21.6-26.4)	±15	55 / -	±34/±4	1500	±220	83
AM1LS-2424DJZ	24 (21.6-26.4)	±24	53 / -	±21/±3	1500	±100	85
AM1LS-0303DH30JZ ※	3.3 (2.97-3.63)	±3.3	416 / -	±152/±15	3000	±1200	77
AM1LS-0305DH30JZ ※	3.3 (2.97-3.63)	±5	389 / -	±100/±10	3000	±1200	82
AM1LS-0309DH30JZ ※	3.3 (2.97-3.63)	±9	389 / -	±56/±5	3000	±470	82
AM1LS-0312DH30JZ ※	3.3 (2.97-3.63)	±12	389 / -	±42/±5	3000	±220	82
AM1LS-0315DH30JZ ※	3.3 (2.97-3.63)	±15	389 / -	±34/±4	3000	±220	82
AM1LS-0324DH30JZ ※	3.3 (2.97-3.63)	±24	379 / -	±21/±2	3000	±100	84
AM1LS-0505DH30JZ	5 (4.5-5.5)	±5	257 / 10	±100/±10	3000	±1200	82
AM1LS-0509DH30JZ	5 (4.5-5.5)	±9	254 / 20	±56/±6	3000	±470	83
AM1LS-0512DH30JZ	5 (4.5-5.5)	±12	254 / 20	±42/±5	3000	±220	83
AM1LS-0515DH30JZ	5 (4.5-5.5)	±15	254 / 30	±34/±4	3000	±220	83
AM1LS-0524DH30JZ	5 (4.5-5.5)	±24	254 / 30	±21/±3	3000	±100	85

AM1LS-1205DH30JZ	12 (10.8-13.2)	±5	107 / -	±100/±10	3000	±1200	82
AM1LS-1207DH30JZ ※	12 (10.8-13.2)	±7.5	107 / -	±67/±7	3000	±470	82
AM1LS-1209DH30JZ	12 (10.8-13.2)	±9	106 / -	±56/±6	3000	±470	83
AM1LS-1212DH30JZ	12 (10.8-13.2)	±12	106 / -	±42/±5	3000	±220	83
AM1LS-1215DH30JZ	12 (10.8-13.2)	±15	106 / -	±34/±4	3000	±220	83
AM1LS-1224DH30JZ	12 (10.8-13.2)	±24	103 / -	±21/±3	3000	±100	85
AM1LS-1515DH30JZ	15 (13.5-16.5)	±15	85 / -	±34/±4	3000	±220	83
AM1LS-2405DH30JZ	24 (21.6-26.4)	±5	55 / -	±100/±10	3000	±1200	82
AM1LS-2409DH30JZ	24 (21.6-26.4)	±9	55 / -	±56/±6	3000	±470	83
AM1LS-2412DH30JZ	24 (21.6-26.4)	±12	55 / -	±42/±5	3000	±220	83
AM1LS-2415DH30JZ	24 (21.6-26.4)	±15	55 / -	±34/±4	3000	±220	83
AM1LS-2424DH30JZ	24 (21.6-26.4)	±24	53 / -	±21/±3	3000	±100	85
Note: Use suffix “TR” for tape & reel packing (ex. AM1LS-0505DJZTR).							

Input Specification

Parameters	Conditions	Typical	Maximum	Units
Filter	Capacitor			
Absolute maximum rating	Maximum duration 1s, 3.3Vin models	> -0.7	5	VDC
	Maximum duration 1s, 5Vin models	> -0.7	9	VDC
	Maximum duration 1s, 12Vin models	> -0.7	18	VDC
	Maximum duration 1s, 15Vin models	> -0.7	21	VDC
	Maximum duration 1s, 24Vin models	> -0.7	30	VDC
Input reflected ripple current	Others	15		mA
	3.3Vin models	30		mA

Isolation Specification

Parameters	Conditions	Typical	Maximum	Units
Tested I/O voltage	60 sec, leakage ≤ 1mA	>1500		VDC
	60 sec, leakage ≤ 1mA for H30 models	>3000		VDC
Resistance	500VDC	>1000		MΩ
Capacitance	100kHz/0.1V	20		pF

Output Specification

Parameters	Conditions	Typical	Maximum	Units
Voltage accuracy	See output voltage tolerance	10	16	%
Line regulation	Per 1% Vin change, 3.3Vout models		1.5	%
	Per 1% Vin change, others		1.2	%
Load regulation	10-100% load, 3.3Vout models (3.3/5Vin series)	15	20	%
	10-100% load, 3.3Vout models (12/15/24Vin series)	8	20	%
	10-100% load, 5Vout models (3.3/5Vin series) & 3.3Vin dual output models (Not included 3.3Vout)	10	15	%
	10-100% load, 5/7.5Vout models (12/15/24Vin series)	5	15	%
	10-100% load, 9/12/15Vout models (3.3Vin series)	8	15	%
	10-100% load, 9Vout models (5Vin series)	8	10	%
	10-100% load, 12Vout models (5Vin series)	7	10	%
	10-100% load, 15Vout models (5Vin series)	6	10	%
	10-100% load, 9/12/15Vout models (12/15/24Vin series)	3	10	%

	10-100% load, 24Voutmodels (3.3Vin series)	6	15	%
	10-100% load, 24Vout models (5Vin series)	5	10	%
	10-100% load, 24Vout models (12/15/24Vin series)	2	10	%
Temperature coefficient	Full load	±0.02		%/°C
Ripple & Noise*	3.3Vin models & 24Vout models	50	100	mV pk-pk
	Others	30	75	mV pk-pk
Minimum load**		10		%

* Ripple and Noise are measured at 20MHz bandwidth. Please refer to the application note for specific details.
** If the required power is less than 1% of the rated converter output, connect a bleeder resistor in parallel with the load to satisfy the minimum load requirement.

General Specifications

Parameters	Conditions	Typical	Maximum	Units
Switching frequency	Full load, nominal input, 3.3Vin models	220		KHz
	Full load, nominal input, 5Vin models	270		KHz
	Full load, nominal input, others	260		KHz
Short circuit protection	Continuous, Auto recovery			
Operating temperature	With derating at 85°C, 3.3Vin models	-40 to +105		°C
	With derating at 100°C, others	-40 to +105		°C
Storage temperature		-55 to +125		°C
Maximum Case temperature	5Vin models(Not included 3.3V single output)	120		°C
	Others	130		°C
Reflow soldering temperature	Maximum duration 60s when over 217°C		245	°C
Soldering method	IPC/JEDEC J-STD-020D.1			
Cooling	Free air convection			
Humidity	Non-condensing	>5	95	% RH
Moisture sensitivity level	Level 1			
Vibration	Not included 5Vin models	10-150Hz, 5G, 0.75mm. along X, Y and Z		
Case material	Black plastic (flammability to UL 94V-0)			
Weight		1.4		g
Dimensions (L x W x H)	Single output models	0.52 x 0.45 x 0.28 inches (13.20 x 11.40 x 7.25 mm)		
	Dual output models	0.60 x 0.45 x 0.28 inches (15.24 x 11.40 x 7.25 mm)		
MTBF	3 500 000 hrs (MIL-HDBK -217F, t=+25°C) / Full Load			

NOTE: All specifications in this datasheet are measured at an ambient temperature of 25°C, humidity<75%, nominal input voltage and at rated output load unless otherwise specified.

Safety Specifications

Parameters		
Standards	Information technology Equipment	Design to meet IEC/EN/UL 62368-1
	EMC - Conducted and radiated emission	CISPR32 / EN55032, class B with the recommended EMI circuit
	Electrostatic Discharge Immunity	IEC 61000-4-2 Air ±8KV, Contact ±4KV, Criteria B (5Vin models) IEC 61000-4-2 Air ±8KV, Contact ±6KV, Criteria B (Other models)

Derating

For 3.3Vin models

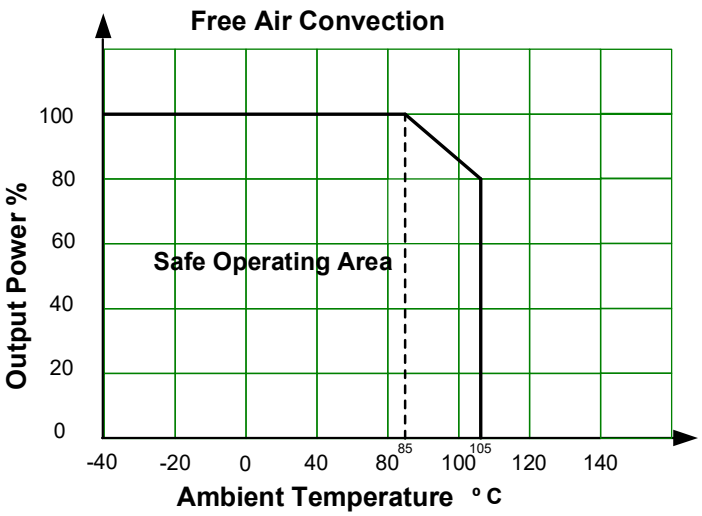

For other models

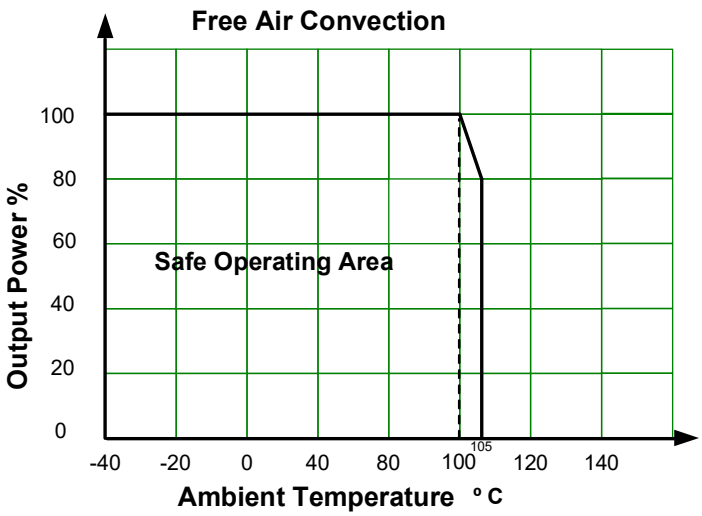

Output voltage tolerance

For AM1LS-0503SJZ & AM1LS-0503SH30JZ & AM1LS-1203SH30JZ

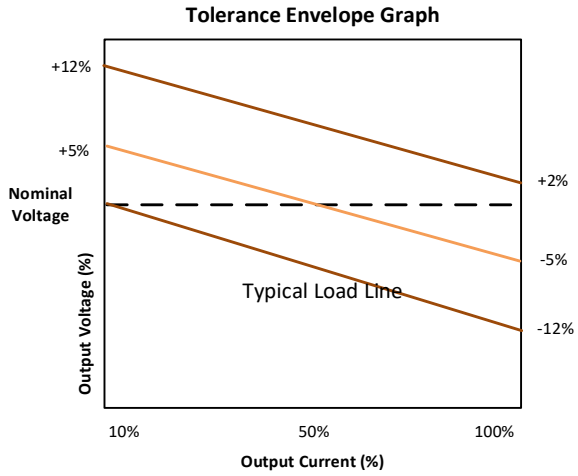

For AM1LS-0303SJZ & AM1LS-0303SH30JZ & AM1LS-0303DJZ & AM1LS-0303DH30JZ

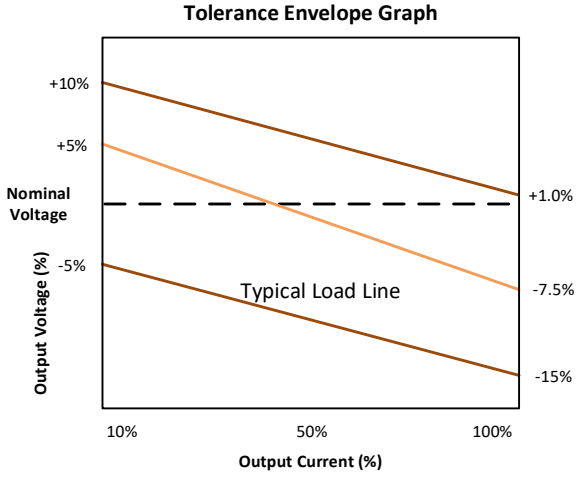

For other 3.3Vin & 5Vin models

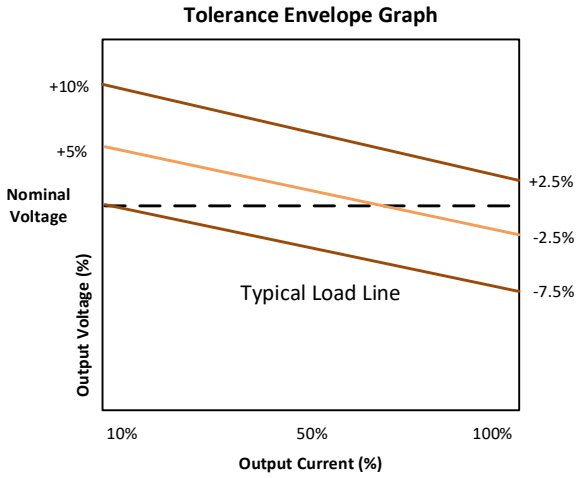

For other models

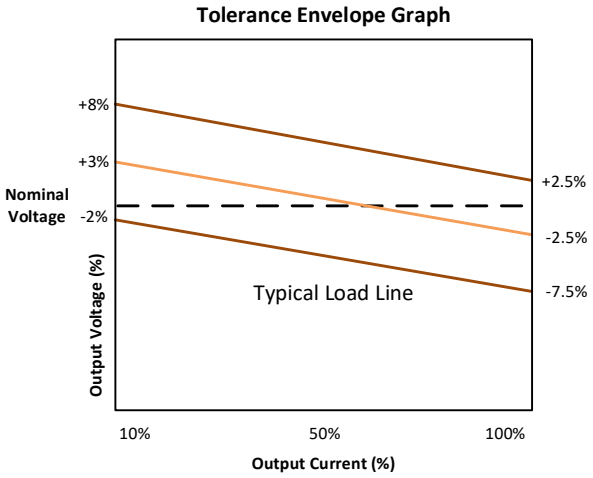

Typical application circuit

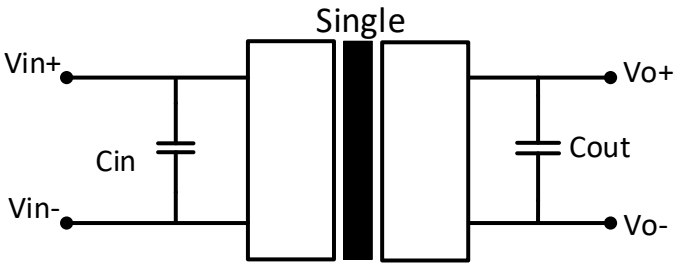

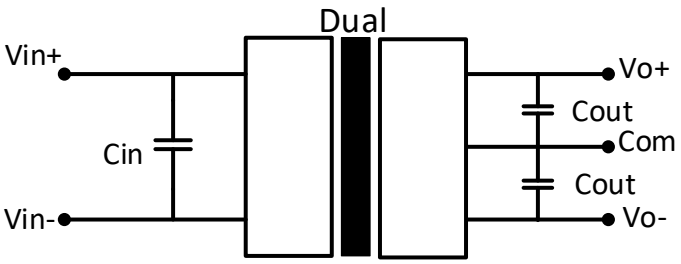

3.3Vin / 5Vin models								
3.3Vin / 5Vin Single output models			3.3Vin Dual output models			5Vin Dual output models		
Cin	Vout	Cout	Cin	Vout	Cout	Cin	Vout	Cout
4.7μF/16V	3.3V	10μF/16V	10μF/16V	±3.3V	10μF/16V	4.7μF/16V	±5V	4.7μF/16V
-	5V	10μF/16V	-	±5V	10μF/16V	-	±9V	2.2μF/16V
-	9V	4.7μF/16V	-	±9V	2.2μF/16V	-	±12V	1μF/25V
-	12V	2.2μF/25V	-	±12V	2.2μF/25V	-	±15V	1μF/25V
-	15V	1μF/25V	-	±15V	1μF/25V	-	±24V	1μF/50V
-	24V	0.47μF/50V	-	±24V	1μF/50V	-	-	-

Other Vin models					
Vin	Cin	Single output models		Dual output models	
		Vout	Cout	Vout	Cout
12	2.2μF/25V	3.3V	10μF/16V	±5V	4.7μF/16V
15	2.2μF/25V	5V	10μF/16V	±7.5V	1μF/16V
24	1μF/50V	9V	2.2μF/16V	±9V	1μF/16V
-	-	12V	2.2μF/25V	±12V	1μF/25V
-	-	15V	1μF/25V	±15V	0.47μF/25V
-	-	24V	1μF/50V	±24V	0.47μF/50V

EMI Recommended circuit

Single output models

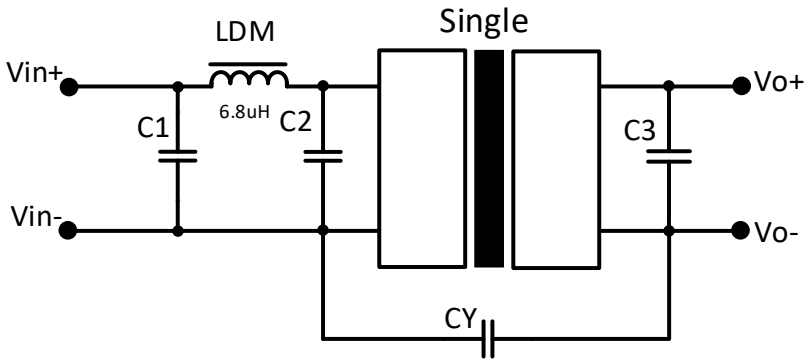

Vin	C1/C2	Vout	CY		C3
			1500VDC isolation	3000VDC isolation	
3.3V	4.7μF/16V	All output	270pF/2Vdc	270pF/4kVdc	Refer to Cout in typical circuit
5V	4.7μF/25V	3.3V/5V/9V	-	-	Refer to Cout in typical circuit
-	-	12V/15V/24V	1nF/2kVDC	1nF/4kVdc	Refer to Cout in typical circuit
12V/15V/24V	4.7μF/50V	All output	270pF/2kVdc	270pF/3kVdc	Refer to Cout in typical circuit

Dual output models

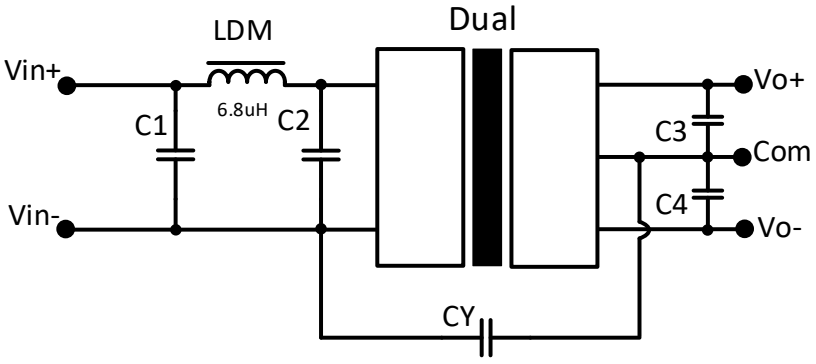

Vin	C1/C2	Vout	CY		C3/C4
			1500VDC isolation	3000VDC isolation	
3.3V	4.7μF/16V	All output	270pF/2Vdc	270pF/4kVdc	Refer to Cout in typical circuit
5V	4.7μF/25V	5V/9V	-	-	Refer to Cout in typical circuit
-	-	12V/15V/24V	1nF/2kVDC	1nF/4kVdc	Refer to Cout in typical circuit
12V/15V/24V	4.7μF/50V	All output	270pF/2kVdc	270pF/3kVdc	Refer to Cout in typical circuit

Dimensions

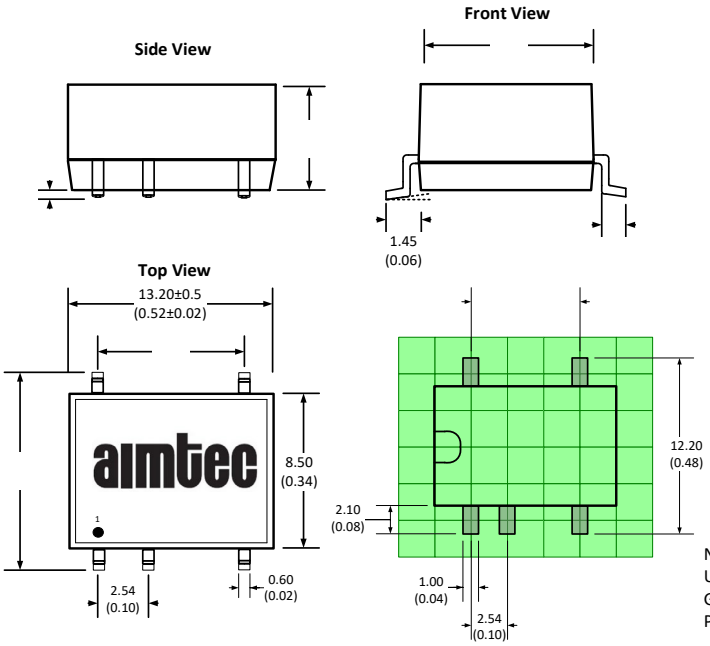

Note:
Unit: mm(inch)
General tolerance: ±0.25 (0.01)
Pin tolerance: ±0.1 (0.004)

Pin Out Specifications		
Pin	Single	Dual
1	-V Input	-V Input
2	+V Input	+V Input
3	-	-
4	-V Output	Common
5	+V Output	-V Output
6	-	-
7	-	+V Output
8	NC	-
9	-	-
10	-	NC

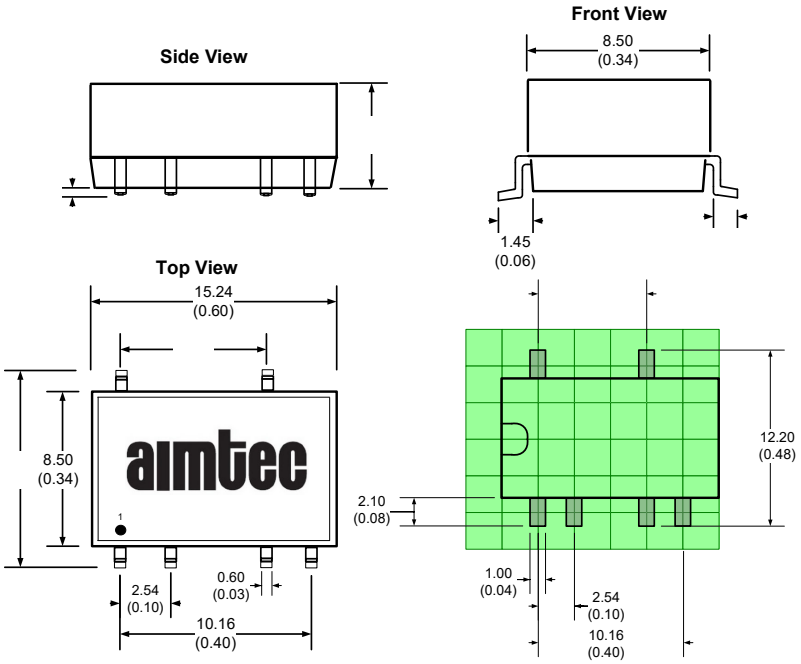

Note:
Unit: mm(inch)
General tolerance: ±0.25 (0.01)
Pin tolerance: ±0.1 (0.004)

Packing Information

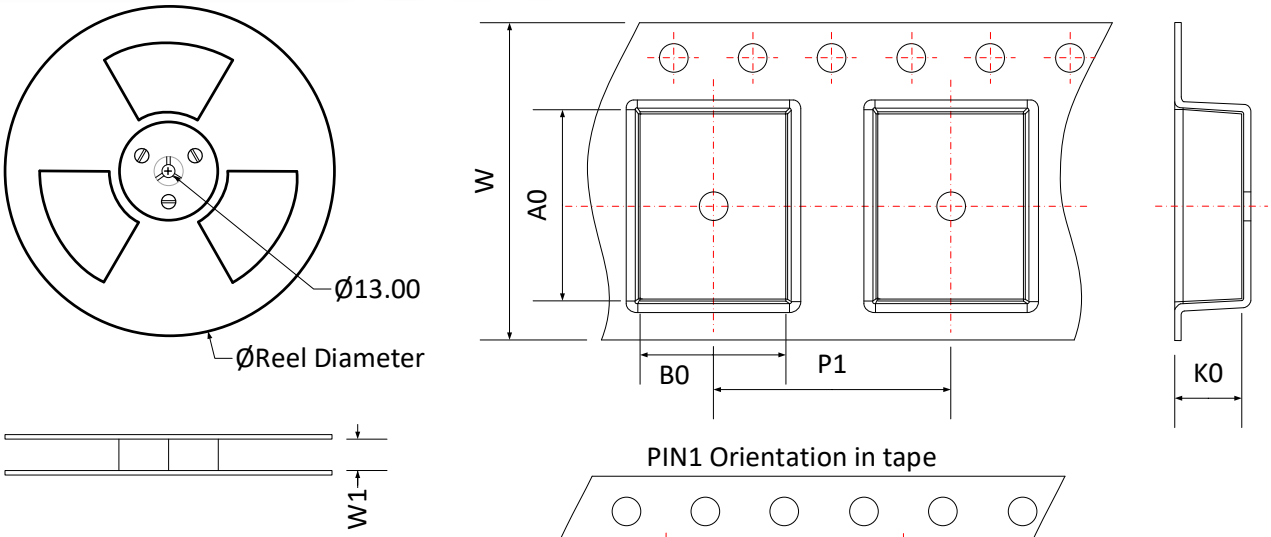

PIN1 Orientation in tape

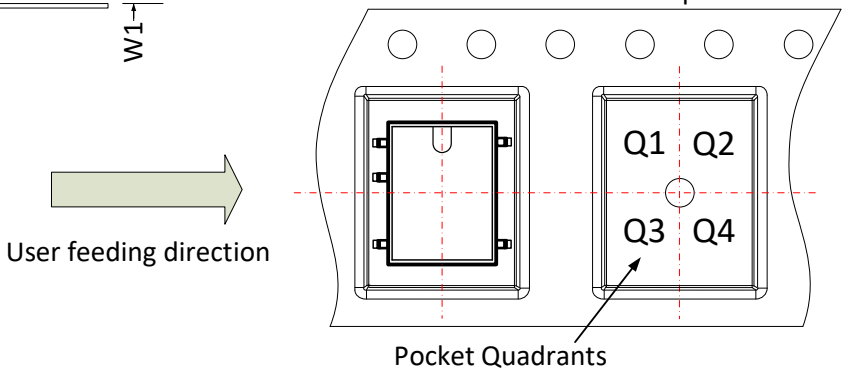

PIN1 Orientation in tape

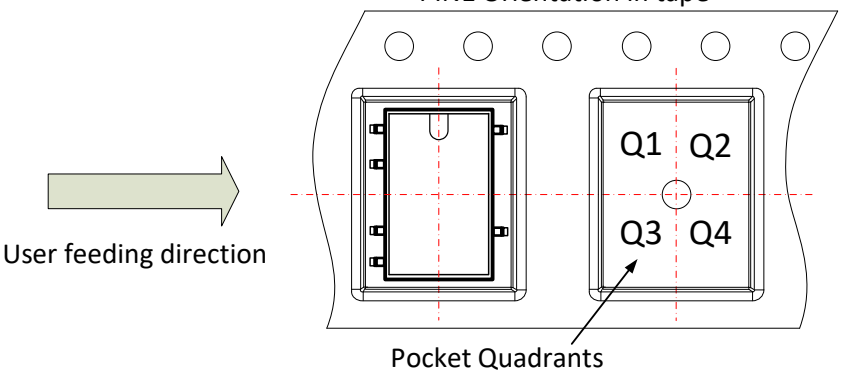

Device	Package Type	Pin	MPQ	Reel Diameter (mm)	Reel Width W1 (mm)	A0	B0	K0	P1	W	P1 Quadrant
AM1LS-JZ Single output	SMD	5	500	330.0	24.5	13.4	11.7	7.5	16.0	24.0	Q1
AM1LS-JZ Dual output	SMD	6	500	330.0	24.5	15.64	12.4	7.45	16.0	24.0	Q1

NOTE: 1. Datasheets are updated as needed and as such, specifications are subject to change without notice. Once printed or downloaded, datasheets are no longer controlled by Aimtec; refer to www.aimtec.com for the most current product specifications. **2.** Product labels shown, including safety agency certifications on labels, may vary based on the date manufactured. **3.** Mechanical drawings and specifications are for reference only. **4.** All specifications are measured at an ambient temperature of 25°C, humidity<75%, nominal input voltage and at rated output load unless otherwise specified. **5.** Aimtec may not have conducted destructive testing or chemical analysis on all internal components and chemicals at the time of publishing this document. CAS numbers and other limited information are considered proprietary and may not be available for release. **6.** This product is not designed for use in critical life support systems, equipment used in hazardous environments, nuclear control systems or other such applications which necessitate specific safety and regulatory standards other the ones listed in this datasheet. **7.** Warranty is in accordance with Aimtec's standard Terms of Sale available at www.aimtec.com.