AM1LS-VZ

Click to ORDER samples

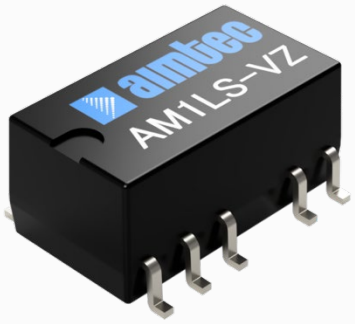

SMD

The new AM1LS-VZ is a DC/DC converter that is a direct replacement to the AM1L-NZ. Offering much greater cost effectiveness due to material normalization and production automation which increases the reliability and performance of this new component. Offering a commercial input voltage range of 3.3-24VDC and an output voltage range from 3.3-24V, this series will offer many benefits to your new system design.

This new series offers great operating temperatures, from -40°C to 105°C with full power up to 100°C. It also features an isolation of 1500VDC or 3000VDC for improved reliability and system safety. Furthermore, a higher MTBF of 3500,000h and output short circuit protection (OSCP) come standard with the series.

The AM1LS-VZ is perfect for information technology, instrumentation, industrial applications, communication and civil applications.

Features

- No load input current as low as 4mA
- Operating Temp: -40 °C to +105 °C
- High I/O isolation voltage : 1500 to 3000 VDC
- Output short circuit protection
- High efficiency up to 85%
- SMD type package, Industry standard pin-out

RoHS

3yr Warranty

CE

Summary

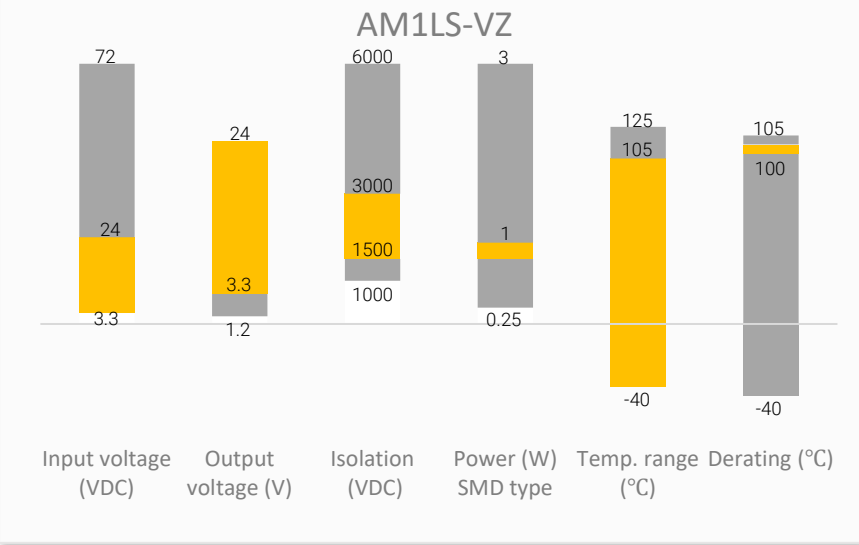

Training



Product Training Video (click to open)

Press Release

Coming Soon!

Application Notes

Applications

IoT

Industrial

Telecom

Instrumentation

Models & Specifications

Single Output

Model	Input Voltage (VDC)	Output Voltage (VDC)	Input Current Max (mA)		Output Current (mA)		Isolation (VDC)	Maximum Capacitive Load (µF)	Efficiency Full Load Typ. (%)
			No Load	Full Load	No Load	Full Load			
AM1LS-0303SVZ	3.3 (2.97-3.63)	3.3	-	416	30	303	1500	2400	77
AM1LS-0305SVZ	3.3 (2.97-3.63)	5	-	389	20	200	1500	2400	82
AM1LS-0503SVZ	5 (4.5-5.5)	3.3	10	286	30	303	1500	2400	74
AM1LS-0505SVZ	5 (4.5-5.5)	5	10	286	20	200	1500	2400	82
AM1LS-0509SVZ	5 (4.5-5.5)	9	20	254	12	111	1500	1000	83
AM1LS-0512SVZ	5 (4.5-5.5)	12	20	254	9	84	1500	560	83
AM1LS-0515SVZ ※	5 (4.5-5.5)	15	30	254	7	67	1500	470	83
AM1LS-1205SVZ ※	12 (10.8-13.2)	5	-	107	20	200	1500	2400	82
AM1LS-1209SVZ ※	12 (10.8-13.2)	9	-	106	12	111	1500	1000	83
AM1LS-1212SVZ ※	12 (10.8-13.2)	12	-	106	9	84	1500	560	83
AM1LS-1215SVZ ※	12 (10.8-13.2)	15	-	106	7	67	1500	560	83
AM1LS-0503SH30VZ	5 (4.5-5.5)	3.3	10	286	30	303	3000	2400	74
AM1LS-0505SH30VZ	5 (4.5-5.5)	5	10	286	20	200	3000	2400	82
AM1LS-0509SH30VZ	5 (4.5-5.5)	9	20	254	12	111	3000	1000	83
AM1LS-0512SH30VZ	5 (4.5-5.5)	12	20	254	9	84	3000	560	83
AM1LS-0515SH30VZ	5 (4.5-5.5)	15	30	254	7	67	3000	560	83
AM1LS-0524SH30VZ	5 (4.5-5.5)	24	30	254	4	42	3000	220	85
AM1LS-1205SH30VZ ※	12 (10.8-13.2)	5	-	107	20	200	3000	2400	82
AM1LS-1212SH30VZ ※	12 (10.8-13.2)	12	-	107	9	84	3000	560	83
AM1LS-1215SH30VZ ※	12 (10.8-13.2)	15	-	107	7	67	3000	560	83
AM1LS-2405SH30VZ ※	24 (21.6-26.4)	5	-	57	20	200	3000	2400	80
AM1LS-2415SH30VZ ※	24 (21.6-26.4)	15	-	57	7	67	3000	560	80

Note: Use suffix "TR" for tape & reel packing (ex. AM1LS-0303SVZTR).

Dual Output

Model	Input Voltage (VDC)	Output Voltage (VDC)	Input Current Max (mA)		Output Current (mA)		Isolation (VDC)	Maximum Capacitive Load (µF)	Efficiency Full Load Typ. (%)
			No Load	Full Load	No Load	Full Load			
AM1LS-0503DH30VZ	5 (4.5-5.5)	±3.3	10	286	±15	±151	3000	1200	74
AM1LS-0505DH30VZ	5 (4.5-5.5)	±5	10	286	±10	±100	3000	1200	82
AM1LS-0509DH30VZ	5 (4.5-5.5)	±9	20	254	±6	±56	3000	470	83
AM1LS-0512DH30VZ	5 (4.5-5.5)	±12	20	254	±5	±42	3000	220	83
AM1LS-0515DH30VZ	5 (4.5-5.5)	±15	30	254	±4	±34	3000	220	83
AM1LS-0524DH30VZ	5 (4.5-5.5)	±24	30	254	±2	±21	3000	100	85
AM1LS-1215DH30VZ ※	12 (10.8-13.2)	±15	-	107	±3	±33	3000	220	83

Note: Use suffix "TR" for tape & reel packing (ex. AM1LS-0503DH30VZTR).

Input Specification

Parameters	Conditions	Typical	Maximum	Units
Filter	Capacitor			
Absolute maximum rating	Maximum duration 1s, 3.3Vin	> -0.7	5	VDC

	Maximum duration 1s, 5Vin	> -0.7	9	VDC
	Maximum duration 1s, 12Vin	> -0.7	18	VDC
	Maximum duration 1s, 24Vin	> -0.7	30	VDC
Input reflected ripple current	3.3Vin models	30		mA
	Others	15		mA

Output Specification

Parameters	Conditions	Typical	Maximum	Units
Voltage accuracy	See Typical Characteristic			
Line regulation	Per 1% Vin change, 3.3Vout models		±1.5	%
	Per 1% Vin change, Others		±1.2	%
Load regulation	10-100% load, 3.3Vout models		20	%
	10-100% load, 3.3/5Vin 5/15Vout 1.5KV isolation models		15	%
	10-100% load, 5Vin 5Vout 3KV isolation models		15	%
	10-100% load, 5Vin 15Vout 3KV isolation models		10	%
	10-100% load, 5Vin 9/12/24Vout models		10	%
	10-100% load, 12/24Vin 5Vout models	5	15	%
	10-100% load, 12/24Vin 9/12/15Vout models		10	%
Temperature coefficient	Full load	±0.02		%/ °C
Ripple & Noise*	5Vin 3.3/5/9/12/15Vout & 12Vin SVZ series models	30	75	mV pk-pk
	AM1LS-0515SVZ & others		100	mV pk-pk

* Ripple and Noise are measured at 20MHz bandwidth. Please refer to the application note for specific details.

Isolation Specification

Parameters	Conditions	Typical	Maximum	Units
Tested I/O voltage	60 sec, 1mA max	1500 / 3000		VDC
Resistance	Input to output resistance at 500Vdc	>1000		MOhm
Capacitance	Input to output, 100KHz/0.1V	20		pF

General Specifications

Parameters	Conditions	Typical	Maximum	Units
Switching frequency	Full load, nominal input voltage, AM1LS-0515SVZ	300		KHz
	Full load, nominal input voltage, 5Vin models	270		KHz
	Full load, nominal input voltage, 12/24Vin models	260		KHz
	Full load, nominal input voltage, 3.3Vin models	220		KHz
Operating temperature	See derating graph	-40 to +105		°C
Storage temperature		-55 to +125		°C
Case temperature rise	Ambient temp 25°C, 5Vin 5/9/12/15/24Vout models	15		°C
	Ambient temp 25°C, others	25		°C
Reflow Temperature	Maximum duration ≤60s over 217°C.		245	°C
Lead-free reflow solder process	IPC/JEDEC J-STD-020D.1			
Short circuit protection	Continuous, auto-recovery			
Cooling	Free air convection			
Vibration	10-150Hz, 5G, 0.75mm, along all axis (Except 5Vin H30 series models)			
Humidity	Non-condensing		95	% RH
Case material	Heat resistant black Plastic (flammability to UL 94V-0)			
Weight		1.3		g
Dimensions (L x W x H)	1500VDC isolated models	0.52 x 0.45 x 0.29inches (13.20 x 11.40 x 7.25mm)		

	3000VDC isolated models	0.60 x 0.45 x 0.29inches (15.24 x 11.40 x 7.25mm)
MTBF	> 3 500 000 hrs (MIL-HDBK -217F, t=+25°C) / Full Load	
Moisture sensitivity level (MSL)	IPC/JEDEC J-STD-020D.1	Level 1
All specifications in this datasheet are measured at an ambient temperature of 25°C, humidity<75%, nominal input voltage and at rated output load unless otherwise specified.		

Safety Specifications		
Parameters		
Standards	Design to meet IEC62368-1/UL62368-1/EN62368-1 (5Vin models only)	
	EMC - Conducted and radiated emission	CISPR32/EN55032, Class B the recommended EMI circuit
	Electrostatic Discharge Immunity	IEC 61000-4-2 Air ±8KV, Contact ±4KV, Criteria B (5Vin models)
		IEC 61000-4-2 Air ±8KV, Contact ±6KV, Criteria B with the recommended EMI circuit (3.3/12/24Vin models)

Typical Characteristic

3.3Vin 3.3Vout model

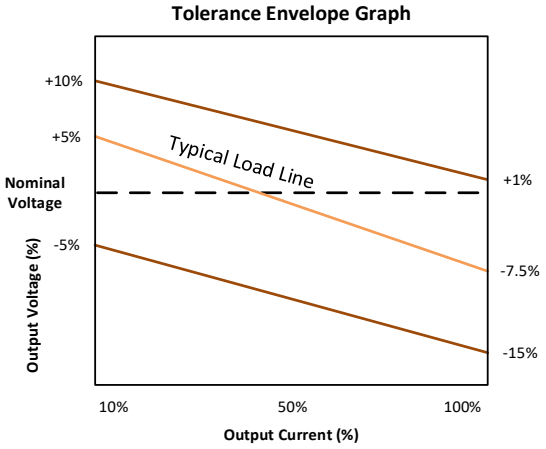

5Vin 3.3Vout models

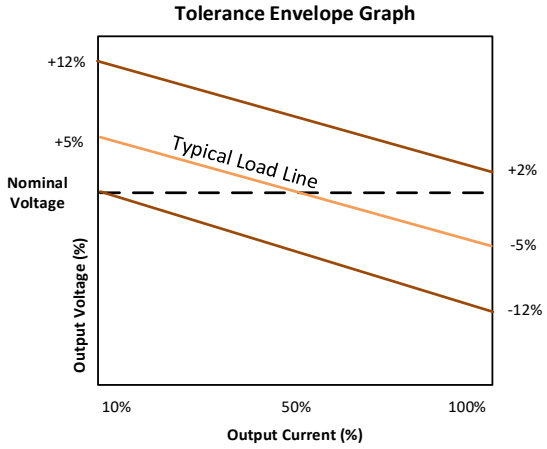

Other 3.3/5Vin models

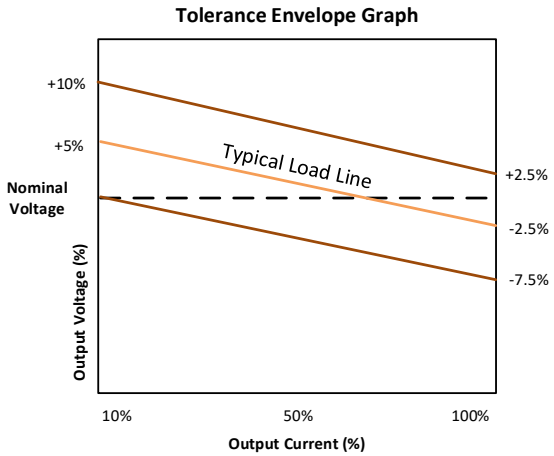

12/24Vin models

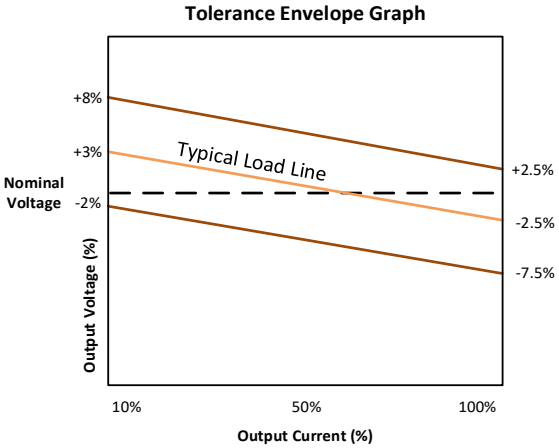

Derating

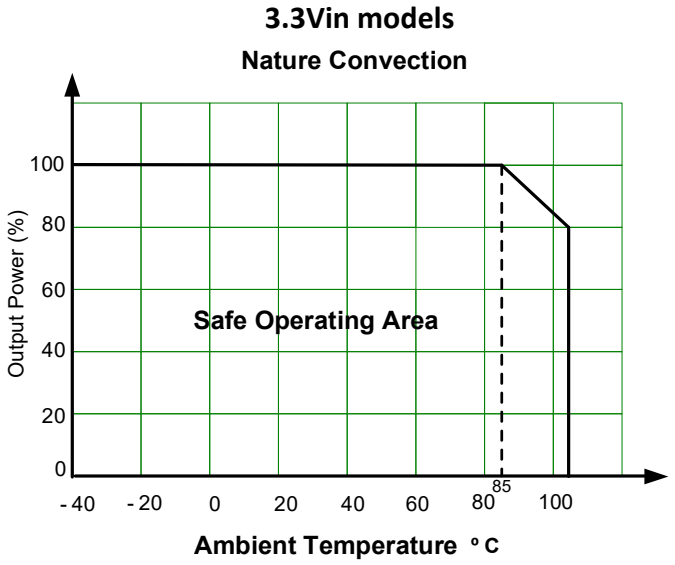

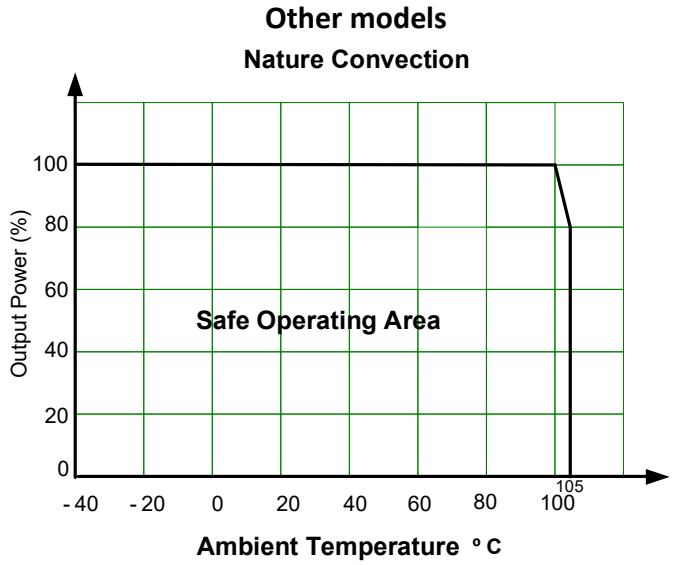

Typical Application Circuit

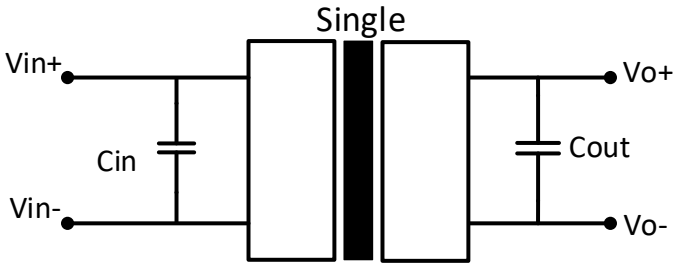

Vin	Cin
3.3	4.7 µF/16V
5	4.7 µF/16V
12	2.2µF/25V
24	1µF/50V

Vout	Cout
3.3 V	10µF/16V
5 V	10µF/16V
9 V	4.7µF/25V
12 V	2.2µF/25V
15 V	1µF/25V
24V	0.47µF/50V

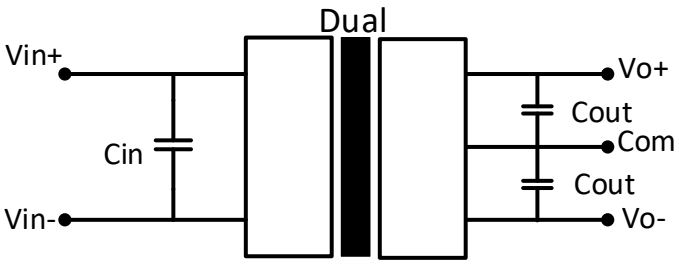

12Vin Dual output model	
Vout	Cout
±15V	0.47µF/25V

1500VDC isolation models	
P/N	Cout
AM1LS-0515SVZ	2.2µF/25V
AM1LS-1209SVZ	2.2µF/16V

EMI Recommended Circuit

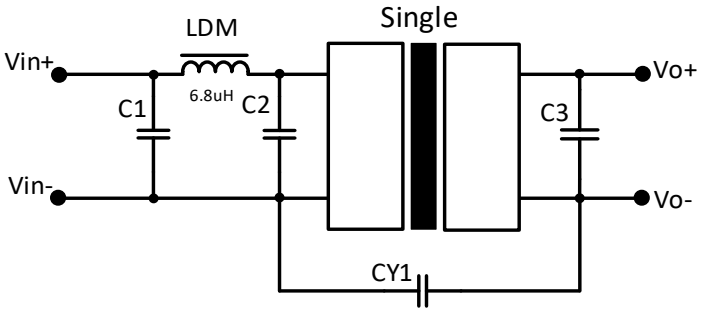

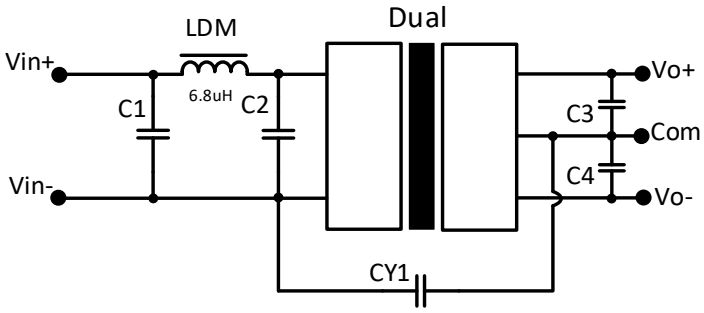

Input voltage	C1/C2	C3/C4
3.3V	4.7µF/16V	Refer to Cout in typical circuit
5V	4.7µF/25V	Refer to Cout in typical circuit
12V	4.7µF/50V	Refer to Cout in typical circuit
24V	4.7µF/50V	Refer to Cout in typical circuit

Input voltage	Output voltage	CY1
3.3V	All	270pF/2KVDC
5V	3.3/5/9V	N/C
	12/15/24V	1nF/4KVDC for 4KV isolation 1nF/2KVDC for 1.5KV isolation
12V	All	270pF/2KVDC for 1.5KV isolation 270pF/3KVDC for 3KV isolation
24V	All	270pF/3KVDC

Dimensions

Dimensions for 1500VDC isolated models

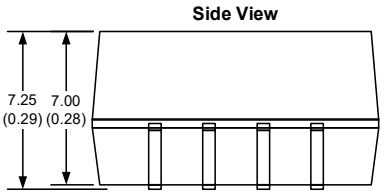

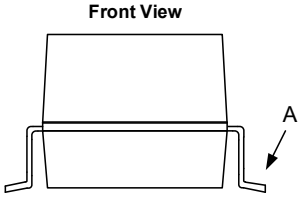

Pin Out Specifications	
Pin	Single
1	-V Input
2	+V Input
4	-V Output
5	+V Output
Other Pins	NC
NC: Pin to be isolated from circuitry	

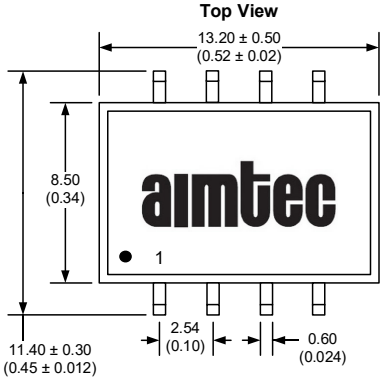

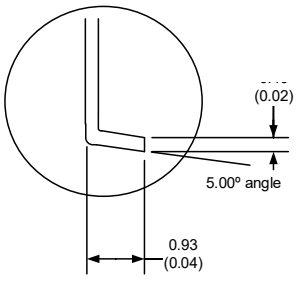

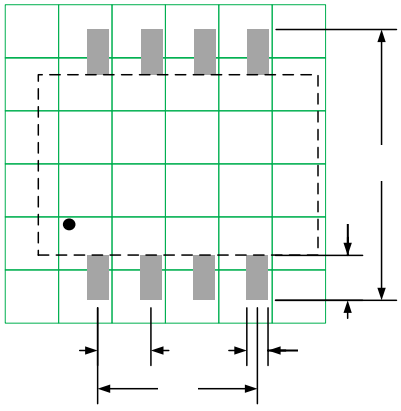

Notes:
All dimensions are typical in millimeters (inches).
Pin section tolerances : ± 0.10 (± 0.004)
General tolerances : ± 0.25 (± 0.01)

Dimensions for 3000VDC isolated models

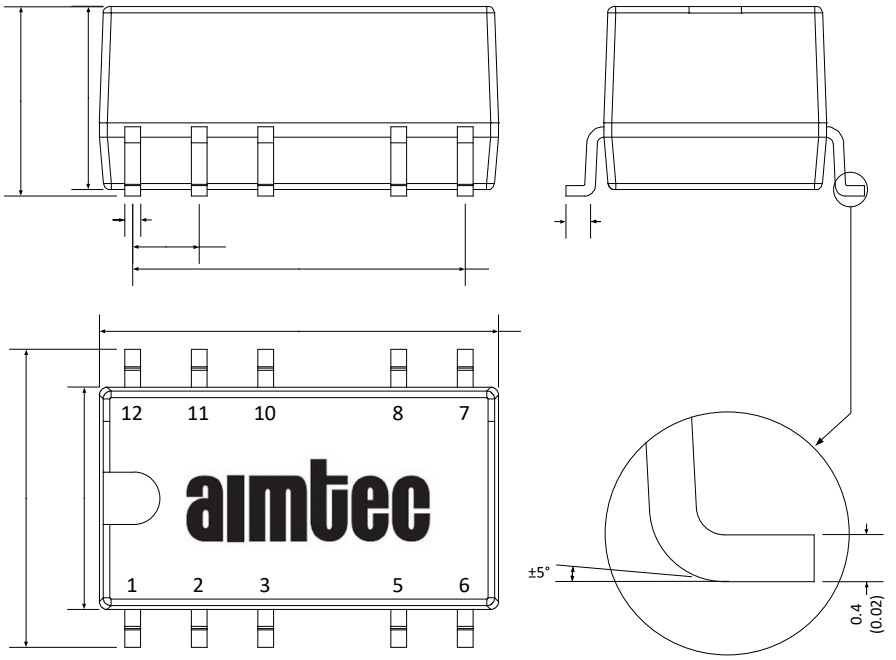

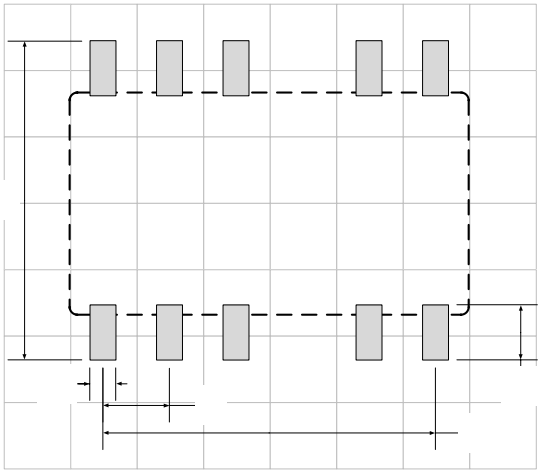

Grid size: 2.54*2.54mm

Note:
Unit: mm(inch)
General tolerance: ±0.25 (0.01)
Pin tolerance: ±0.1 (0.004)

Pin Out Specifications		
Pin	Single	Dual
1	-V Input	-V Input
2	+V Input	+V Input
5	-V Output	Common
6	NC	-V Output
8	+V Output	+V Output
Other Pins	NC	NC
NC: Pin to be isolated from circuitry		

Packing Information

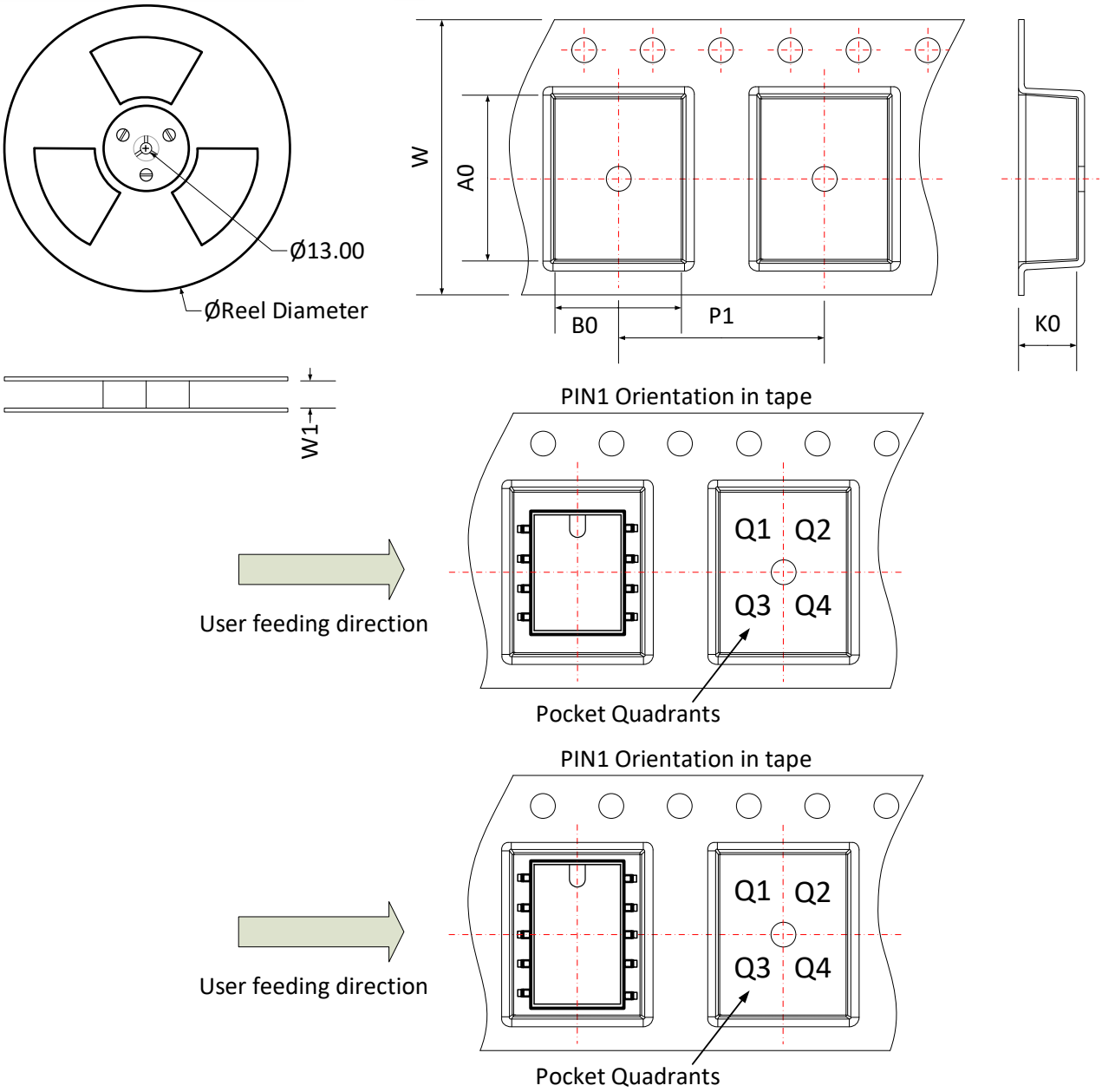

Device	Package Type	Pin	MPQ	Reel Diameter (mm)	Reel Width W1 (mm)	A0	B0	K0	P1	W	P1 Quadrant
1.5KV isolation models	SMD	8	500	330.0	24.5	13.4	11.7	7.5	16.0	24.0	Q1
3KV isolation models	SMD	10	500	330.0	24.5	15.6	12.4	7.45	16.0	24.0	Q1

NOTE: 1. Datasheets are updated as needed and as such, specifications are subject to change without notice. Once printed or downloaded, datasheets are no longer controlled by Aimtec; refer to www.aimtec.com for the most current product specifications. **2.** Product labels shown, including safety agency certifications on labels, may vary based on the date manufactured. **3.** Mechanical drawings and specifications are for reference only. **4.** All specifications are measured at an ambient temperature of 25°C, humidity<75%, nominal input voltage and at rated output load unless otherwise specified. **5.** Aimtec may not have conducted destructive testing or chemical analysis on all internal components and chemicals at the time of publishing this document. CAS numbers and other limited information are considered proprietary and may not be available for release. **6.** This product is not designed for use in critical life support systems, equipment used in hazardous environments, nuclear control systems or other such applications which necessitate specific safety and regulatory standards other the ones listed in this datasheet. **7.** Warranty is in accordance with Aimtec's standard Terms of Sale available at www.aimtec.com.