Series AM1SS-N(J)Z

1 Watt | DC-DC Converter



FEATURES:

- Unregulated
- 4 Pin SIP Package
- Low ripple and noise
- High efficiency up to 82%
- Operating temperature -40ºC to +105ºC
- Input / Output isolation 1500 VDC
- Pin compatible with multiple manufacturers
- Continuous Short Circuit Protection

Models
Single output

Model	Input Voltage (VDC)	Output Voltage (VDC)	Output Current max (mA)	Isolation (VDC)	Max. Capacitive Load (µF)	Efficiency (%)
AM1SS-0303S-NZ ‡*	2.97-3.63	3.3	303	1500	220	72
AM1SS-0305S-NZ ‡	2.97-3.63	5	200	1500	220	76
AM1SS-0312S-NZ ‡	2.97-3.63	12	84	1500	220	80
AM1SS-0503S-NZ*	4.5-5.5	3.3	303	1500	220	72
AM1SS-0503SJZ*	4.5-5.5	3.3	303	1500	2400	74
AM1SS-0505S-NZ	4.5-5.5	5	200	1500	220	80
AM1SS-0505SJZ*	4.5-5.5	5	200	1500	2400	82
AM1SS-0509S-NZ	4.5-5.5	9	111	1500	220	80
AM1SS-0509SJZ*	4.5-5.5	9	111	1500	1000	83
AM1SS-0512S-NZ	4.5-5.5	12	84	1500	220	81
AM1SS-0512SJZ*	4.5-5.5	12	84	1500	560	83
AM1SS-0515S-NZ	4.5-5.5	15	67	1500	220	81
AM1SS-0515SJZ*	4.5-5.5	15	67	1500	560	83
AM1SS-0524S-NZ ‡	4.5-5.5	24	42	1500	220	81
AM1SS-0524SJZ*	4.5-5.5	24	42	1500	220	85
AM1SS-1203S-NZ*	10.8-13.2	3.3	303	1500	220	72
AM1SS-1205S-NZ	10.8-13.2	5	200	1500	220	80
AM1SS-1209S-NZ	10.8-13.2	9	110	1500	220	80
AM1SS-1212S-NZ	10.8-13.2	12	83	1500	220	81
AM1SS-1215S-NZ	10.8-13.2	15	67	1500	220	80
AM1SS-1224S-NZ	10.8-13.2	24	42	1500	220	80
AM1SS-1515S-NZ*	13.5-16.5	15	67	1500	220	81
AM1SS-2403S-NZ ‡*	21.6-26.4	3.3	303	1500	220	72
AM1SS-2405S-NZ ‡	21.6-26.4	5	200	1500	220	80
AM1SS-2409S-NZ ‡	21.6-26.4	9	110	1500	220	80
AM1SS-2412S-NZ ‡	21.6-26.4	12	83	1500	220	81
AM1SS-2415S-NZ ‡	21.6-26.4	15	67	1500	220	82
AM1SS-2424S-NZ ‡	21.6-26.4	24	42	1500	220	82

‡ With Momentary short circuit protection of 1 second

Input Specifications

Parameters	Conditions	Typical	Maximum	Units
Voltage range	Nominal 3.3V input Nominal 5 input Nominal 12 input Nominal 15 input Nominal 24 input	2.97-3.63 4.5-5.5 10.8-13.2 13.5-16.5 21.6-26.4		VDC
Absolute Max Rating (1 sec. max.)	Nominal 3.3 input Nominal 5 input Nominal 12 input Nominal 15 input Nominal 24 input		5 9 18 21 30	VDC
Input no load current	3.3V output models with suffix NZ	30	70	mA

	5V output models with suffix NZ 12V output models with suffix NZ 15V output models with suffix NZ 24V output models with suffix NZ	20 15 10 17	60 50 35 30	
	3.3V/5V output models with suffix JZ 9V/12V output models with suffix JZ 15V/24V output models with suffix JZ	5 12 18	10 20 30	
Reflected Ripple Current		15		mA
Filter	Capacitor			
Hot Plug	Unavailable			

Note: Reflected ripple current testing method please see DC-DC Converter Application Notes for specific operation.

Isolation Specifications

Parameters	Conditions	Typical	Rated	Units
Tested I/O voltage	60 sec		1500	VDC
Resistance		> 1000		MOhm
Capacitance		20		pF

Output Specifications

Parameters	Conditions		Typical	Maximum	Units
Voltage accuracy	See tolerance graph		±5		%
Short Circuit protection			Continuous, unless marked with ‡		
Line voltage regulation	For 1.0% Vin, 3.3V Model For 1.0% Vin, Other Model			±1.5 ±1.2	% of Vin
Load voltage regulation	10 – 100% load for parts with suffix NZ	3.3V output 5V output 9V output 12V output 15V output 24V output	18 12 8 7 6 5		%
	10 – 100% load for parts with suffix JZ	3.3V output 5V output 9V output 12V output 15V output 24V output	15 10 8 7 6 5	20 15 10 10 10 10	
Temperature coefficient			±0.03		%/ºC
Temperature coefficient (for part number with suffix JZ)			±0.02		%/ºC
Ripple & Noise	At 20 MHz Bandwidth		60	150	mV p-p
Ripple & Noise (for part number with suffix JZ)	At 20 MHz Bandwidth	Other Model 24V Model	30 50	75 100	mV p-p

General Specifications

Parameters	Conditions	Typical	Maximum	Units
Switching frequency	100% load	100-300		KHz
Switching frequency (for part number with suffix JZ)	100% load	270		KHz
Operating temperature	Derating Above 85ºC	-40 to +105		ºC
Storage temperature		-55 to +125		ºC
Maximum case temperature			125	ºC
Cooling	Free air convection			
Humidity	Non condensing		95	%
Soldering Lead Temperature	1.5mm from Lead, for 10 Sec		300	ºC
Case material	Plastic UL94-V0			
Weight		1.3		g
Dimensions (L x H x W)		0.46 x 0.4x 0.24 inches	11.60 x 10.16 x 6.00 mm	
MTBF	>3500K hrs(MIL-HDBK -217F, Ground Benign, t=+25ºC)			

NOTE: All specifications in this datasheet are measured at an ambient temperature of 25°C, humidity<75%, nominal input voltage and at rated output load unless otherwise specified.

Safety Specifications

Parameters		
Agency approvals	cULus	
Standards	Information technology Equipment	UL 60950-1 (except the models marked with *)
		Design to meet UL 62368 (for models with suffix JZ)
	EMI -Conducted and radiated emission	CISPR32/EN55032 Class B with the recommended EMI circuit (for models with suffix JZ)
	Electrostatic Discharge Immunity	IEC/EN61000-4-2 Air ±8kV, Contact ±6kV, Criteria B (for models with suffix JZ)

Pin Out Specifications

Pin	Single
1	- V Input
2	+V Input
3	-V Output
4	+V Output

Dimensions for part number with suffix JZ

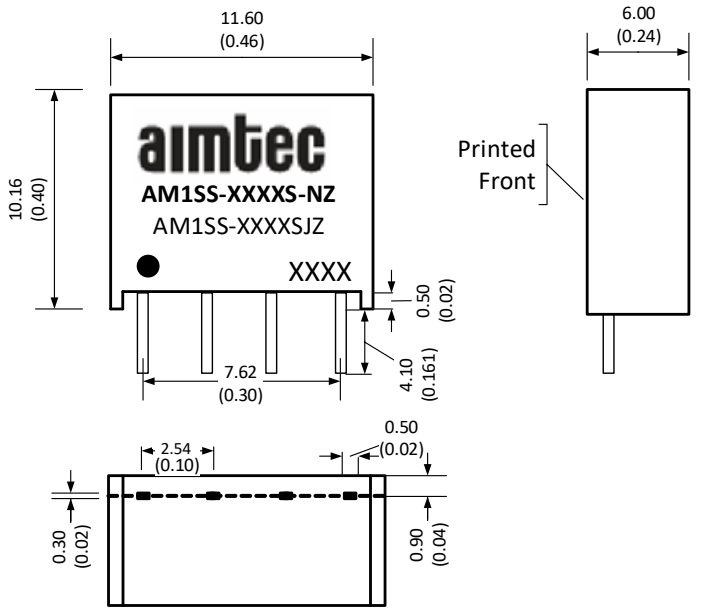

Typical Application Circuit

Capacitor selection Table

Vin	C1	Single VDC	C2
3.3	4.7 µF	3.3 V	10 µF
5	4.7 µF	5 V	10µF
12	2.2µF	9 V	4.7 µF
15	2.2µF	12 V	2.2µF
24	1µF	15 V	1µF
		24V	0.47 µF
for part number with suffix JZ		9 V	2.2 µF
		24 V	1µF

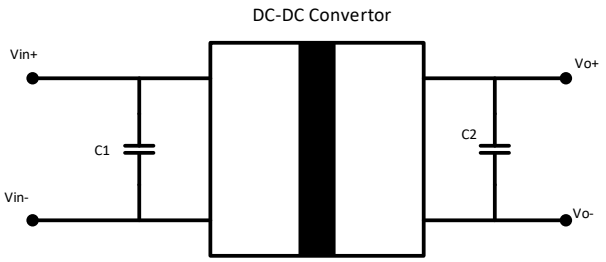

Derating

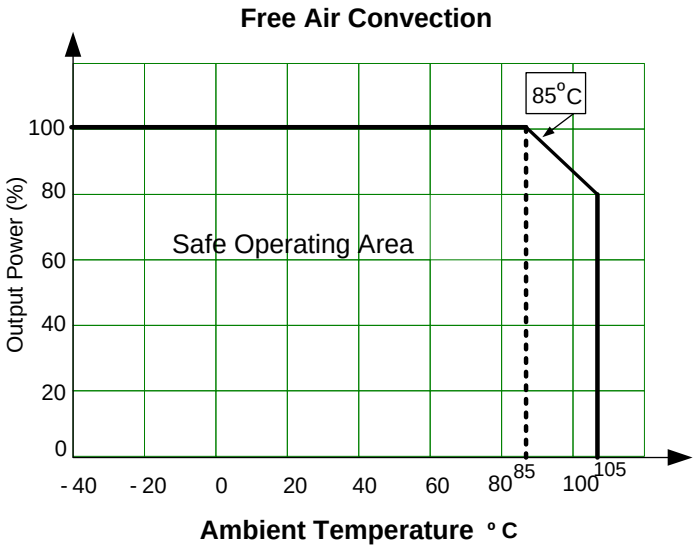

Typical Characteristics

AM1SS-0503SJZ

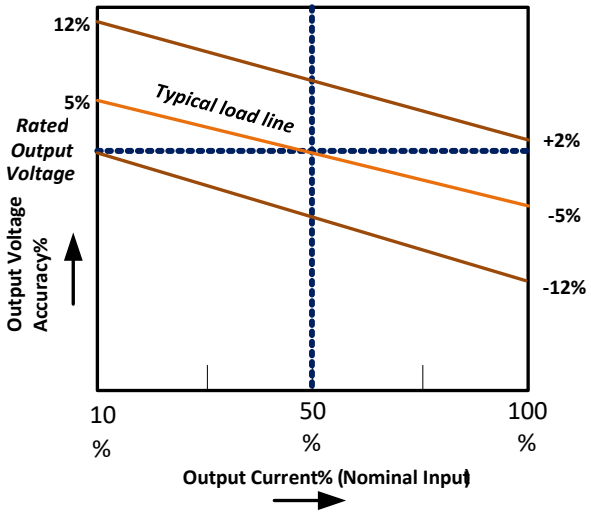

Other Model

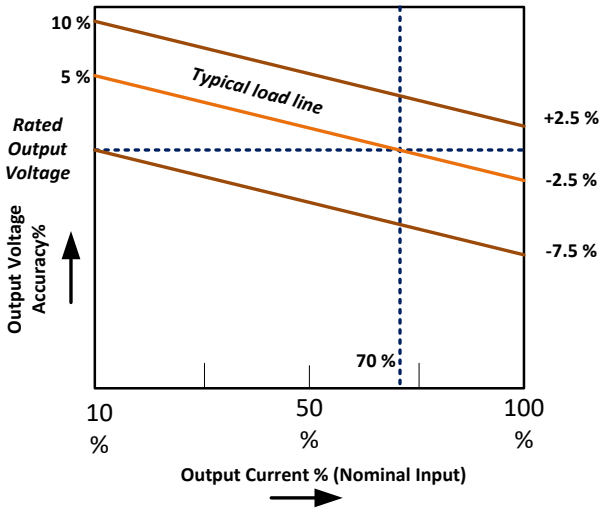

Recommended Circuit for EMI Class B

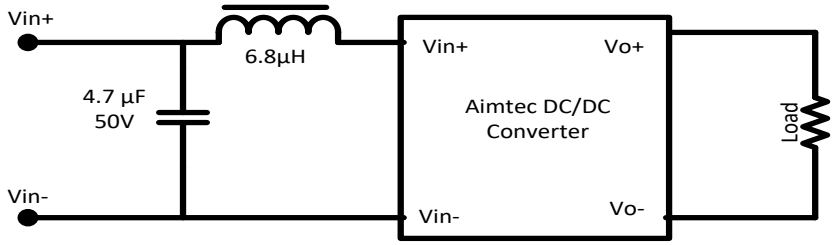

Recommended Circuit for EMI Class B (for part numbers with suffix JZ)

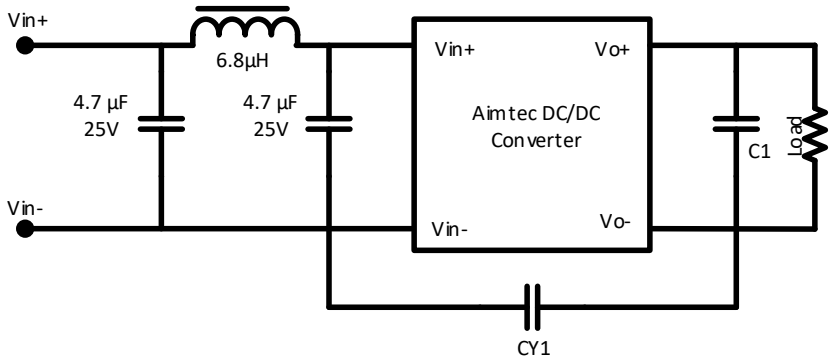

Single VDC	C1	CY1
3.3 V	10 µF	100pF / 4KVDC
5 V		
9 V	2.2µF	
12 V		1nF / 4KVDC VISHAY HGZ102MBP TDK CD45-E2GA102M-GKA
15 V	1µF	
24V		

NOTE: 1. Datasheets are updated as needed and as such, specifications are subject to change without notice. Once printed or downloaded, datasheets are no longer controlled by Aimtec; refer to www.aimtec.com for the most current product specifications. **2.** Product labels shown, including safety agency certifications on labels, may vary based on the date manufactured. **3.** Mechanical drawings and specifications are for reference only. **4.** All specifications are measured at an ambient temperature of 25°C, humidity<75%, nominal input voltage and at rated output load unless otherwise specified. **5.** Aimtec may not have conducted destructive testing or chemical analysis on all internal components

and chemicals at the time of publishing this document. CAS numbers and other limited information are considered proprietary and may not be available for release. **6.** This product is not designed for use in critical life support systems, equipment used in hazardous environments, nuclear control systems or other such applications which necessitate specific safety and regulatory standards other the ones listed in this datasheet. **7.** Warranty is in accordance with Aimtec's standard Terms of Sale available at www.aimtec.com.