aimtec
Your Power Partner

# Series AM20C-Z

## 20 Watt | DC-DC Converter




### FEATURES:

- Ultra-compact footprint 1”x1”
- Wide Input Range 2:1
- 1600 VDC Isolation
- Remote ON/OFF Function
- No Minimum Load Required
- Adjustable Output Voltage
- Operating Temperature -40ºC to +75ºC
- Over Current and Over Voltage Protection
- Efficiency up to 90%
- RoHS Compliant
- Soft Start

## Models:
## Single output

| Model | Input Voltage (V) | Output Voltage (V) | Output Current max (A) | Isolation (VDC) | Max Capacitive Load (uF) | Efficiency (%) |
|---|---|---|---|---|---|---|
| AM20C-1203SZ | 9-18 | 3.3 | 4.5 | 1600 | 7000 | 86 |
| AM20C-1205SZ | 9-18 | 5 | 4 | 1600 | 5000 | 90 |
| AM20C-1212SZ | 9-18 | 12 | 1.67 | 1600 | 850 | 89 |
| AM20C-1215SZ | 9-18 | 15 | 1.33 | 1600 | 700 | 89 |
| AM20C-2403SZ | 18-36 | 3.3 | 4.5 | 1600 | 7000 | 86 |
| AM20C-2405SZ | 18-36 | 5 | 4 | 1600 | 5000 | 89 |
| AM20C-2412SZ | 18-36 | 12 | 1.67 | 1600 | 850 | 89 |
| AM20C-2415SZ | 18-36 | 15 | 1.33 | 1600 | 700 | 89 |
| AM20C-4803SZ | 36-75 | 3.3 | 4.5 | 1600 | 7000 | 86 |
| AM20C-4805SZ | 36-75 | 5 | 4 | 1600 | 5000 | 89 |
| AM20C-4812SZ | 36-75 | 12 | 1.67 | 1600 | 850 | 89 |
| AM20C-4815SZ | 36-75 | 15 | 1.33 | 1600 | 700 | 85 |

## Models: Dual output

| Model | Input Voltage (V) | Output Voltage (V) | Output Current max (A) | Isolation (VDC) | Max Capacitive Load (uF) | Efficiency (%) |
|---|---|---|---|---|---|---|
| AM20C-1212DZ | 9-18 | ±12 | ±0.833 | 1600 | ±470 | 89 |
| AM20C-1215DZ | 9-18 | ±15 | ±0.667 | 1600 | ±330 | 89 |
| AM20C-2412DZ | 18-36 | ±12 | ±0.833 | 1600 | ±470 | 89 |
| AM20C-2415DZ | 18-36 | ±15 | ±0.667 | 1600 | ±330 | 89 |
| AM20C-4812DZ | 36-75 | ±12 | ±0.833 | 1600 | ±470 | 89 |
| AM20C-4815DZ | 36-75 | ±15 | ±0.667 | 1600 | ±330 | 89 |

NOTE: All specifications in this datasheet are measured at an ambient temperature of 25°C, humidity<75%, nominal input voltage and at rated output load unless otherwise specified.

## Input Specifications

| Parameters | Nominal | Typical | Maximum | Units |
|---|---|---|---|---|
| Voltage range | 12 | 9-18 | | VDC |
| | 24 | 18-36 | | VDC |
| | 48 | 36-75 | | VDC |
| Filter | π | | | |
| Start up time | Nominal Vin with constant resistive load | 30 | | ms |
| Absolute Maximum Rating | 12 Vin | | 25 | VDC |
| | 24 Vin | | 50 | VDC |
| | 48 Vin | | 100 | VDC |
| Peak Input Voltage time | | | 100 | ms |
| On/Off control | ON –3 to 12VDC (or open) | | | |
| | OFF – 0 to 1.2VDC or short pin 2 to pin 3; OFF idle current – 5mA | | | |
| Under voltage lockout | 12 Vin ON/OFF | 8.6 / 7.9 | | VDC |
| | 24 Vin ON/OFF | 17.8 / 15.5 | | VDC |
| | 48 Vin ON/OFF | 33.5 / 30.5 | | VDC |
| Input reflected ripple current | With a 12µH inductance and a 47µF capacitor | 30 | | mA p-p |

## Isolation Specifications

| Parameters | Conditions | Typical | Rated | Units |
|---|---|---|---|---|
| Tested I/O voltage | 60 sec | | 1600 | VDC |
| Case to I/O | 60 sec | 1600 | | VDC |
| Resistance | | >1000 | | MOhm |
| Capacitance | | 1500 | | pF |

## Output Specifications

| Parameters | Conditions | Typical | Maximum | Units |
|---|---|---|---|---|
| Voltage accuracy | | | ±1 | % |
| Cross Regulation* | Dual Output Models | ±5 | | % |
| Over voltage protection | 3.3Vout, Zener diode clamp | 3.9 | | V |
| | 5Vout, Zener diode clamp | 6.2 | | V |
| | 9Vout, Zener diode clamp | 15 | | V |
| | 12Vout, Zener diode clamp | 18 | | V |
| | ±12Vout, Zener diode clamp | ±15 | | V |
| | ±15Vout, Zener diode clamp | ±18 | | V |
| Over current protection | Full Load | 140 | | % |
| Short Circuit protection | Continuous | | | |
| Short circuit restart | Auto-Recovery | | | |
| Line voltage regulation | HL-LL | | ±0.5 | % |
| Load voltage regulation | 0% to 100% load, single output | | ±0.5 | % |
| Load voltage regulation | 0% to 100% balanced load, dual output | | ±1 | % |
| Temperature coefficient | | ±0.02 | | %/°C |
| Ripple & Noise** | 3.3, 5Vout models | | 75 | mV p-p |
| | Other models | | 100 | mV p-p |
| Voltage adjustment range | Trim - Single output models only | | ±10 | % |

* 25% load on one output - 100% load on second load.
** Measured at 20MHz bandwidth with a 1µF ceramic capacitor and a 10µF electrolytic capacitor.

## General Specifications

| Parameters | Conditions | Typical | Maximum | Units |
|---|---|---|---|---|
| Switching frequency | 100% load | 330 | | KHz |
| Operating temperature | With derating above +55°C | -40 to +75 | | °C |
| Storage temperature | | -55 to +125 | | °C |
| Maximum case temperature | | | 105 | °C |
| Derating | | 2.33 | | %/ °C |
| Cooling | Free air convection (30-65LFM) | | | |
| Humidity | | | 95 | % RH |
| Case material | Nickel-coated copper | | | |
| Weight | | 19 | | g |
| Dimensions (L x W x H) | 1.00 x 1.00 x 0.41 inches 25.40 x 25.40 x 10.4 mm | | | |
| MTBF | > 560,000 hrs (MIL-HDBK -217F, Ground Benign, t=+25°C) | | | |
| Maximum soldering temperature | 1.5mm from case for 10 sec | | 260 | °C |
| Transient recovery time | Load step change 75% to 50% to 25% | 250 | | µS |
| Transient recovery deviation | Load step change 75% to 50% to 25% | | ±3 | % |

## Safety Specifications

| Parameters | |
|---|---|
| Agency Approval | CE, UL |
| Standards | UL60950-1, UL62368-1 |
| | EN55032, Class A |
| | IEC61000-4-2, Perf. Criteria A |
| | IEC61000-4-3, Perf. Criteria A |
| | IEC61000-4-4, Perf. Criteria A (external 220uF/100V cap required) |
| | IEC61000-4-5, Perf. Criteria A (external 220uF/100V cap required) |
| | IEC61000-4-6, Perf. Criteria A |
| | IEC61000-4-8, Perf. Criteria A |

## Pin Out Specifications

| Pin | Single | Dual |
|---|---|---|
| 1 | + V input | + V input |
| 2 | - V input | - V input |
| 3 | On/Off Control | On/Off Control |
| 4 | + V output | + V output |
| 5 | Trim | Common |
| 6 | - V output | - V output |

## Dimensions

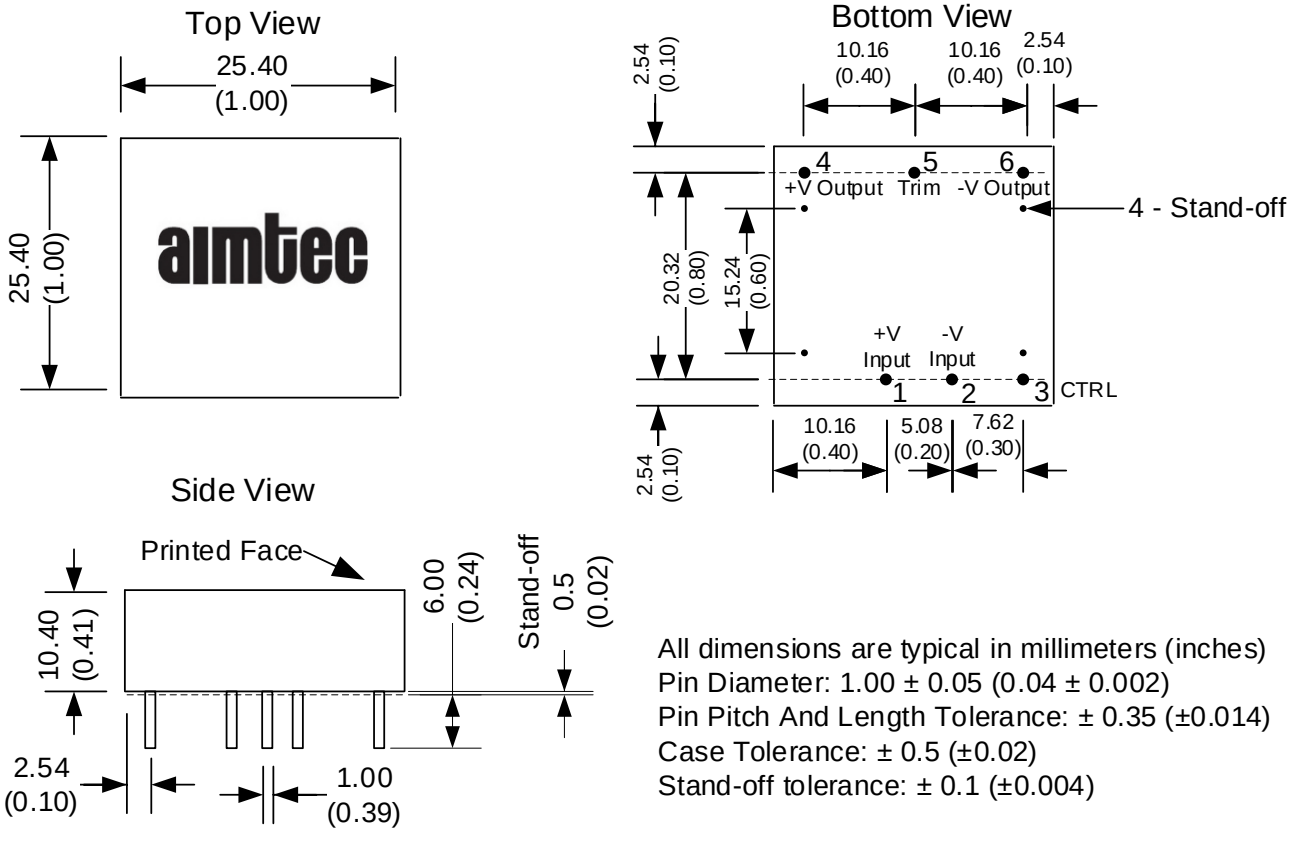


All dimensions are typical in millimeters (inches)
Pin Diameter: 1.00 ± 0.05 (0.04 ± 0.002)
Pin Pitch And Length Tolerance: ± 0.35 (±0.014)
Case Tolerance: ± 0.5 (±0.02)
Stand-off tolerance: ± 0.1 (±0.004)

## Trimming

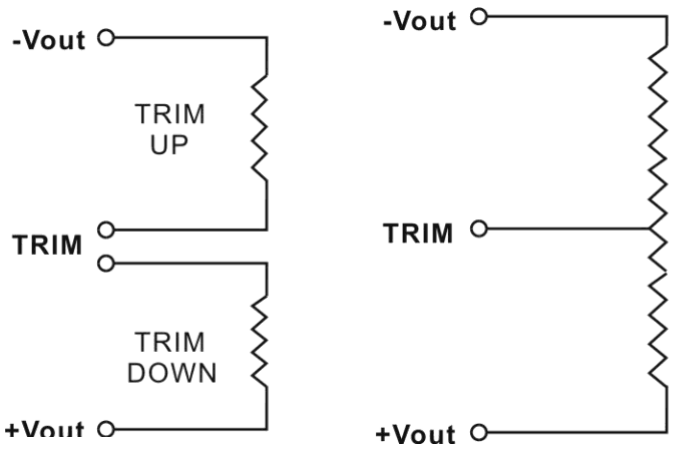


## Derating

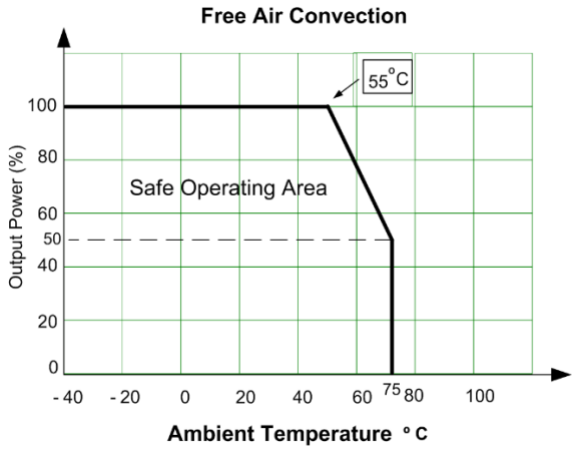

## Typical Application Circuit

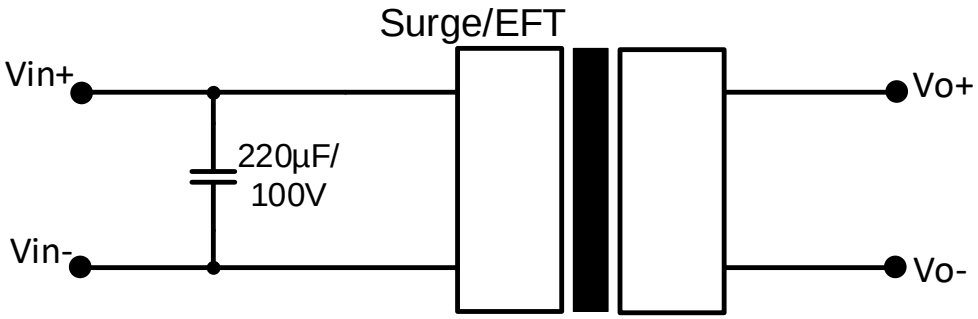


**NOTE: 1.** Datasheets are updated as needed and as such, specifications are subject to change without notice. Once printed or downloaded, datasheets are no longer controlled by Aimtec; refer to www.aimtec.com for the most current product specifications. **2.** Product labels shown, including safety agency certifications on labels, may vary based on the date manufactured. **3.** Mechanical drawings and specifications are for reference only. **4.** All specifications are measured at an ambient temperature of 25°C, humidity<75%, nominal input voltage and at rated output load unless otherwise specified. **5.** Aimtec may not have conducted destructive testing or chemical analysis on all internal components and chemicals at the time of publishing this document. CAS numbers and other limited information are considered proprietary and may not be available for release. **6.** This product is not designed for use in critical life support systems, equipment used in hazardous environments, nuclear control systems or other such applications which necessitate specific safety and regulatory standards other the ones listed in this datasheet. **7.** Warranty is in accordance with Aimtec's standard Terms of Sale available at www.aimtec.com.