AM20CWR-ZK

Click to ORDER samples



1x1”

The new AM20CWR-ZK is a brand-new 20 Watt DC/DC converter that offers much greater cost effectiveness due to material normalization and production automation also leading to improved reliability and performance. Offering a wide input voltage range of 13-176 VDC and an output voltage range from 3.3-15V, this series will offer many benefits to your new system design.
This new series has an inbuilt heat sink offering great operating temperatures, from -40℃ to 100℃ with full power up to 61℃. It also features an isolation of 3000VDC for improved reliability and system safety. Furthermore, a higher MTBF of 190,000h, output short circuit protection (OSCP), output over-current protection (OCP) and an output over-voltage protection (OVP) come standard with the series in a 1X1 package. The AM20CWR-ZK is perfect for Railway applications.

Features

- Ultra-wide Input: 13 – 70VDC /42 - 176VDC
- Operating Temp: -40 °C to +100 °C
- High isolation voltage: 3000VDC
- On/Off Control
- Output short circuit, over-current, over-voltage protection
- Designed to meet EN50155
- Built in EMI filter designed to EN50121-3-2 class A

RoHS

3yr Warranty

CE

Summary

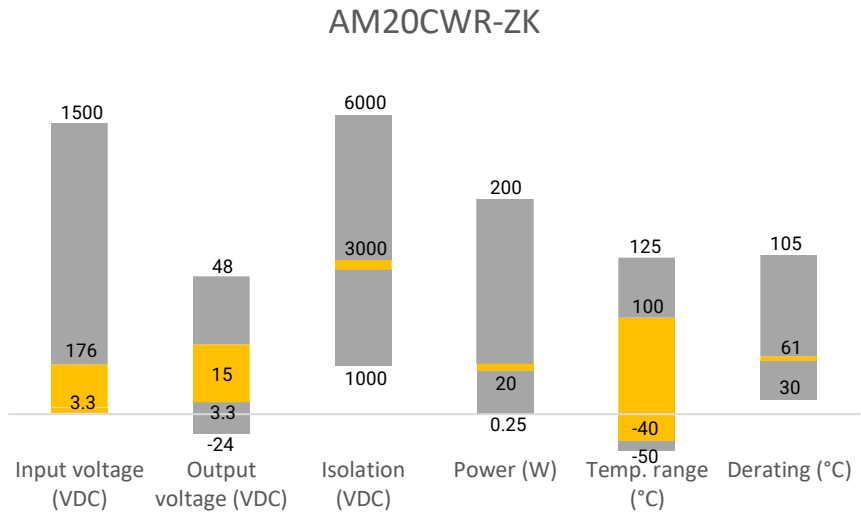

Training



Product Training Video (click to open)

Press Release

Coming Soon!

Application Notes

Applications

Railway

Industrial

Models & Specifications

Single Output							
Model	Input Voltage (VDC)	Output Voltage (VDC)	Input Current max (mA)	Output Current max (A)	Isolation (VDC)	Maximum capacitive Load (µF)	Efficiency (%)
AM20CWR-2403SZK	24 (13 - 70)	3.3	711	4.5	3000	7000	87
AM20CWR-2405SZK	24 (13 - 70)	5	947	4	3000	5000	88
AM20CWR-2412SZK	24 (13 - 70)	12	936	1.67	3000	850	89
AM20CWR-2415SZK	24 (13 - 70)	15	926	1.33	3000	700	90
AM20CWR-11003SZK	110 (42 - 176)	3.3	157	4.5	3000	7000	86
AM20CWR-11005SZK	110 (42 - 176)	5	204	4	3000	5000	89
AM20CWR-11012SZK	110 (42 - 176)	12	211	1.67	3000	850	86
AM20CWR-11015SZK	110 (42 - 176)	15	211	1.33	3000	700	86

Dual Output							
Model	Input Voltage (VDC)	Output Voltage (VDC)	Input Current max (mA)	Output Current max (A)	Isolation (VDC)	Maximum capacitive Load (µF)	Efficiency (%)
AM20CWR-2405DZK	24 (13 - 70)	±5	969	±2.0	3000	±1000	86
AM20CWR-2412DZK	24 (13 - 70)	±12	926	±0.833	3000	±680	90
AM20CWR-2415DZK	24 (13 - 70)	±15	926	±0.666	3000	±470	90
AM20CWR-11005DZK	110 (42 - 176)	±5	216	±2.0	3000	±1000	84
AM20CWR-11012DZK	110 (42 - 176)	±12	209	±0.833	3000	±680	87
AM20CWR-11015DZK	110 (42 - 176)	±15	209	±0.666	3000	±470	87

Input Specification				
Parameters	Conditions	Typical	Maximum	Units
Voltage range	24V models 110V models	13 – 70 42 – 176		VDC
Input under voltage lockout	24V models, ON/OFF 110V models, ON/OFF	12.3/11.6 40.5/38.4		VDC
Filter	Pi network			
Startup time	Nominal input and resistive load	0.03		S
Absolute maximum rating	24V models 110V models		100 185	VDC
Peak input voltage time	Duration 100mS			VDC
Input reflected ripple current			20	mA pk-pk
On/Off Control	ON – high impedance or open;			

	OFF – 2-4mA input current through 1KΩ (standby 2.5mA max)			

Isolation Specification

Parameters	Conditions	Typical	Maximum	Units
Tested I/O voltage	60 sec	3000		VDC
Resistance	500Vdc	>1000		MOhm
Capacitance		2000		pF

Output Specification

Parameters	Conditions		Typical	Maximum	Units
Voltage accuracy			±1		%
Cross regulation (Dual)	25% to 100% load on one output, 100% load on second output		±5		%
Line regulation	Full load, main input range			±0.5	%
Load regulation	0-100% load	Single		±0.5	%
		Dual (balanced load)		±1	
Voltage adjustment				±10	%Vout
Short circuit protection	Continuous, Auto recovery				
Over current protection			140		% of Iout
Over voltage protection			170		% of Vout
Temperature coefficient			±0.02		%/°C
Ripple & Noise*	Single (With a 10uF/25V X7R MLCC)			75	mV pk-pk
	Dual (With a 10uF/25V X7R MLCC on each output)			75	
Transient recovery time	25% load step change		250		µS
Transient response deviation	25% load step change	Single 3.3V model	±3		%
		Others	±5		
* 20MHz bandwidth					

General Specifications

Parameters	Conditions	Typical	Maximum	Units
Switching frequency	100% load, 24V models	300		KHz
	100% load, 110V models	245		
Operating temperature	See derating graph	-40 to +100		°C
Storage temperature		-55 to +125		°C
Maximum case temperature			105	°C
Lead temperature	1.5mm from case 10 sec.		260	°C
Cooling	Free air convection			
Humidity	Non-condensing	95		% RH
Case material	Copper			
Base material	Non-conductive black plastic (UL 94V-0 rated)			
Weight	23			g
Dimensions (L x W x H)	1.09 x 1.09 x 0.65 inches (27.60. x 27.60 x 16.40mm)			
MTBF	> 190 000 hrs (MIL-HDBK -217F, t=+25°C)/Full Load			

All specifications in this datasheet are measured at an ambient temperature of 25°C, humidity<75%, nominal input voltage and at rated output load unless otherwise specified.

Environmental Specifications		
Parameters		
Standards	Thermal shock	IEC 60068
	Shock	EN61373
	Vibration	EN61373

Safety Specifications		
Parameters		
Standards	Electronic equipment in railway applications	EN50155
	EMC - Radiated emission	EN50121-3-2, 40dBuV from 30-230MHZ 47dBuV from 230-1000MHZ
	EMC - Conducted emission*	EN50121-3-2, 99dBuV from 0.15-0.5MHZ 93dBuV from 0.5-30MHZ
	Electrostatic Discharge Immunity	EN50121-3-2, Contact ±6KV / Air ±8KV, Criteria A
	RF, Electromagnetic Field Immunity	EN50121-3-2, 20V/m, Criteria A
	Electrical Fast Transient/Burst Immunity**	EN50121-3-2, 2KV, Criteria A
	Surge Immunity**	EN50121-3-2, 2KV, Criteria A
	RF, Conducted Disturbance Immunity	EN50121-3-2, 10Vr.m.s, Criteria A
	Power frequency magnetic field Immunity	EN61000-4-8, 100A/m, Criteria A

* With added EMI recommended circuit, which can meet conducted emissions 79dBuV from 0.15-0.5MHz and 73dBuV from 0.5-30MHz.

** The external filter capacitor is required to meet EFT and Surge EN50121-3-2
For 24V models: One electrolytic capacitor (Recommended Nippon - chemi - con KY series, 330µF/100V).
For 110V models: Two electrolytic capacitors in parallel (Recommended Ruby-con BXF series, 100µF/250V).

Derating

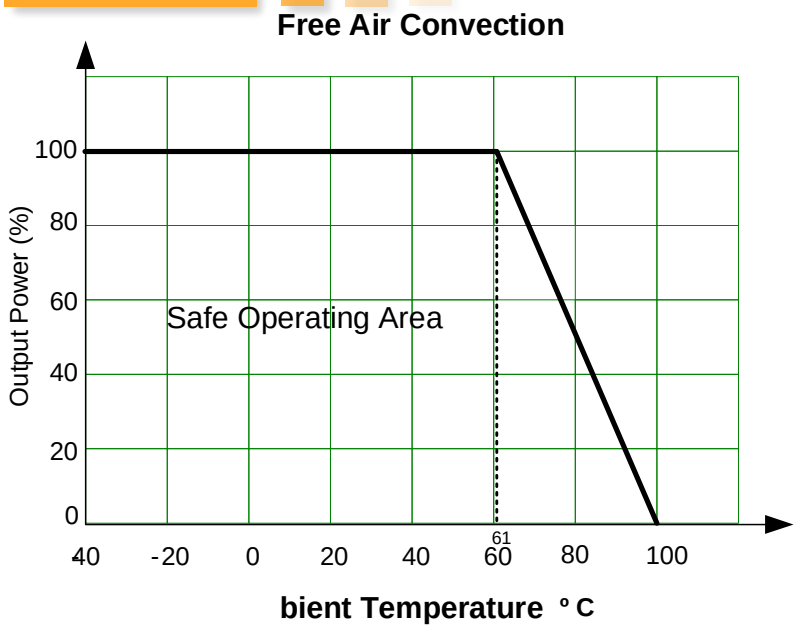

On/Off Control Application Circuit

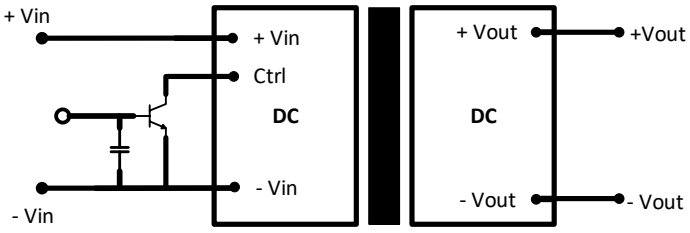

EMI Recommended Circuit

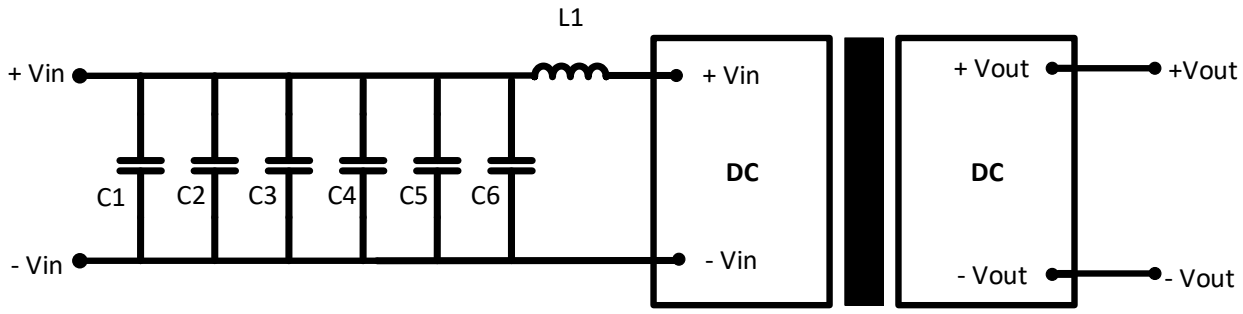

Model	C1, C2, C3, C4, C5, C6	L1
24V models	None	None
110V models	1812, 1µF, 250V	12µH

Dimensions

Pin Output Specifications		
Pin	Single	Dual
1	+V Input	+V Input
2	-V Input	-V Input
3	On/Off Ctrl	On/Off Ctrl
4	+V Output	+V Output
5	Trim	Common
6	-V Output	-V Output

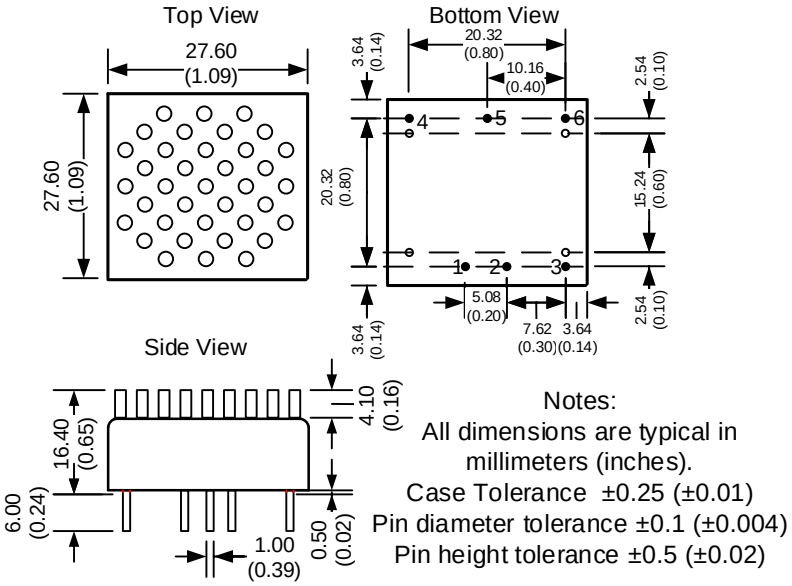

Notes:
All dimensions are typical in millimeters (inches).
Case Tolerance ±0.25 (±0.01)
Pin diameter tolerance ±0.1 (±0.004)
Pin height tolerance ±0.5 (±0.02)

NOTE: 1. Datasheets are updated as needed and as such, specifications are subject to change without notice. Once printed or downloaded, datasheets are no longer controlled by Aimtec; refer to www.aimtec.com for the most current product specifications. **2.** Product labels shown, including safety agency certifications on labels, may vary based on the date manufactured. **3.** Mechanical drawings and specifications are for reference only. **4.** All specifications are measured at an ambient temperature of 25°C, humidity<75%, nominal input voltage and at rated output load unless otherwise specified. **5.** Aimtec may not have conducted destructive testing or chemical analysis on all internal components and chemicals at the time of publishing this document. CAS numbers and other limited information are considered proprietary and may not be available for release. **6.** This product is not designed for use in critical life support systems, equipment used in hazardous environments, nuclear control systems or other such applications which necessitate specific safety and regulatory standards other the ones listed in this datasheet. **7.** Warranty is in accordance with Aimtec's standard Terms of Sale available at www.aimtec.com.