aimtec
Your Power Partner

Series AM20E-Z

20 Watt | DC-DC Converter



FEATURES:

- Wide 2:1 Input Range
- 1600 VDC I/O Isolation
- Adjustable Output Voltage
- Soft Start
- Over Current & Over Voltage Protection
- Efficiency up to 93%
- Temperature Range -40ºC to +85ºC
- Remote On/Off Function
- Continuous Short Circuit Protection
- No Minimum Load Required

RoHS CE

Models
Single output

Model	Input Voltage (V)	Output Voltage (V)	Output Current max (A)	Maximum Capacitive Load (µF)	Efficiency (%)
AM20E-1203SZ	9-18	3.3	5.5	10000	90
AM20E-1205SZ	9-18	5	4	6800	92
AM20E-1212SZ	9-18	12	1.67	1000	90
AM20E-1215SZ	9-18	15	1.33	680	90
AM20E-2403SZ	18-36	3.3	5.5	10000	91
AM20E-2405SZ	18-36	5	4	6800	93
AM20E-2412SZ	18-36	12	1.67	1000	91
AM20E-2415SZ	18-36	15	1.33	680	91
AM20E-4803SZ	36-75	3.3	5.5	10000	91
AM20E-4805SZ	36-75	5	4	6800	93
AM20E-4812SZ	36-75	12	1.67	1000	91
AM20E-4815SZ	36-75	15	1.33	680	91

Add suffix “-K” for optional heat sink

Models
Dual output

Model	Input Voltage (V)	Output Voltage (V)	Output Current max (A)	Maximum Capacitive Load (µF)	Efficiency (%)
AM20E-1212DZ	9-18	±12	±0.835	±470	89
AM20E-1215DZ	9-18	±15	±0.665	±330	89
AM20E-2412DZ	18-36	±12	±0.835	±470	90
AM20E-2415DZ	18-36	±15	±0.665	±330	90
AM20E-4812DZ	36-75	±12	±0.835	±470	90
AM20E-4815DZ	36-75	±15	±0.665	±330	89

Add suffix “-K” for optional heat sink

Input Specifications

Parameters	Nominal	Typical	Maximum	Units
Voltage range		9-18 18-36 36-75		VDC
Filter	π (Pi) Network			
Start up time		20		ms
Absolute Maximum Rating	12 Vin 24 Vin 48 Vin		36 50 100	VDC
Peak Input Voltage time			100	ms
On/Off Control	ON : 3.0 to 12Vdc or open circuit ; OFF: 0 to 1.2Vdc or short pin2 and pin 1, Idle current: 5mA typ.			
Under Voltage Lockout	12 Vin, ON/OFF 24 Vin, ON/OFF 48 Vin, ON/OFF	8.6/7.9 17.8/16 33.530.5		VDC
Input Reflected Ripple Current*		20		mA p-p

* The input reflected ripple current should be measured with a 12µH inductor and a 47µF input capacitor (ESR<1Ω at 100 KHz)

Isolation Specifications

Parameters	Conditions	Typical	Rated	Units
Tested voltage Input/Output	60 sec		1600	VDC
Case / Input & Output	60 sec	1600		VDC
Resistance		>1000		MOhm
Capacitance		1200		pF

Output Specifications

Parameters	Conditions	Typical	Maximum	Units
Voltage accuracy			±1	%
Cross Regulation	25% load on one output - 100% load on second load	±5		%
Over voltage protection	3.3Vout, Zener diode clamp	3.9		VDC
	5Vout, Zener diode clamp	6.2		VDC
	12Vout, Zener diode clamp	15		VDC
	15Vout, Zener diode clamp	18		VDC
	±12Vout, Zener diode clamp	±15		VDC
	±15Vout, Zener diode clamp	±18		VDC
Over current protection	140% of Full Load			
Short Circuit protection	Continuous			
Short circuit restart	Auto-Recovery			
Line voltage regulation	HL-LL		±0.5	%
Load voltage regulation	Single output, From 0% load to 100% load		±0.5	%
Load voltage regulation	Dual output, Balanced Load		±1	%
Ripple & Noise*	20MHz Bandwidth		75	mV p-p
Voltage adjustment range	Single output		±10	%
Transient Recovery Time	25% load step change (75%-50%-25% of Io)	250		uS
Transient Recovery Deviation	25% load step change (75%-50%-25% of Io)		±3	%

* Measured with a 1µF CC.

General Specifications

Parameters	Conditions	Typical	Maximum	Units
Switching frequency	100% load	330		KHz
Operating temperature		-40 to +85		°C
Storage temperature		-55 to +125		°C
Maximum case temperature			100	°C
Temperature coefficient		±0.02		%/°C
Derating	Without heatsink, 70 to 85°C	3.3		%/°C
	With heatsink, 75 to 85°C	4		%/°C
Cooling	Free Air Convection			
Humidity			95	% RH
Case material	Nickel-coated Copper			
Base material	Non-conductive Black Plastic(UL94V-0 rated)			
Potting material	Epoxy (UL94V-0 rated)			
Weight		31		g
Dimensions (L x W x H)	2.00 x 1.00 x 0.40 inches 50.80 x 25.40 x 10.16mm			
MTBF	>684,000 hrs (MIL-HDBK -217F, Ground Benign, t=+25°C)			
Max Soldering temperature	1.5mm from case, 10 sec. max.		260	°C

NOTE: All specifications in this datasheet are measured at an ambient temperature of 25°C, humidity<75%, nominal input voltage and at rated output load unless otherwise specified.

Safety Specifications

Parameters	
Agency Approvals	CE
Standards	EN55022 Class A, with the recommended circuit
	EN61000-4-2 Perf. Criteria A
	EN61000-4-3 Perf. Criteria A
	EN61000-4-4 Perf. Criteria A, with external filter capacitor, 220µF/100V
	EN61000-4-5 Perf. Criteria A, with external filter capacitor, 220µF/100V

	EN61000-4-6 Perf. Criteria A
	EN61000-4-8 Perf. Criteria A
	NOTE: also designed to meets IEC/EN/UL 60950-1, 62368-1

Pin Out Specifications

Pin	Single	Dual
1	On/Off Control	On/Off Control
2	- V Input	- V Input
3	+ V Input	+ V Input
4	- V Output	- V Output
5	Trim	Common
6	+ V Output	+ V Output

Dimensions

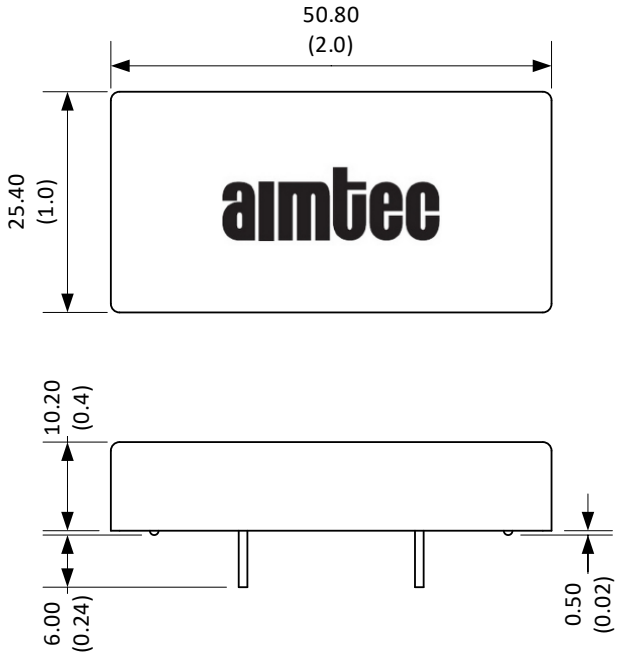

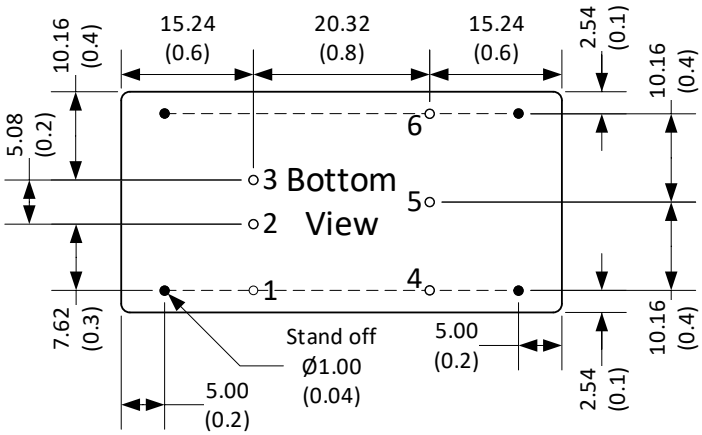

All dimensions are typical: millimeters (inches)
Pin Diameter: 1.0 ± 0.05 (0.04 ± 0.002)
Pin Pitch tolerance: ± 0.35 (±0.014)
Case tolerance: ± 0.5 (±0.02)
Stand off tolerance: ± 0.1 (±0.004)

Dimensions with Optional Heat Sink



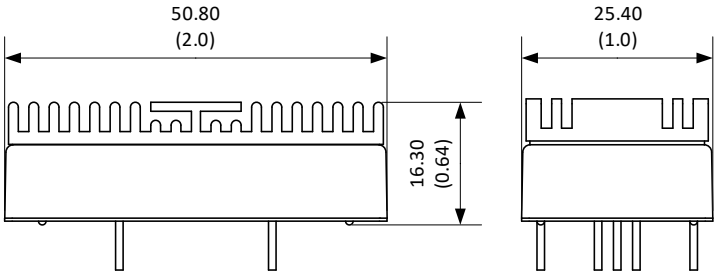

Notes: Add “-K” suffix for ordering, heat sink is affixed with thermally dissipative adhesive tape.
See derating graph for temperature performance. Heat sink material is anodized (black) aluminum, adds weight 11.3g to total mass (42.3g).

Recommended Circuits

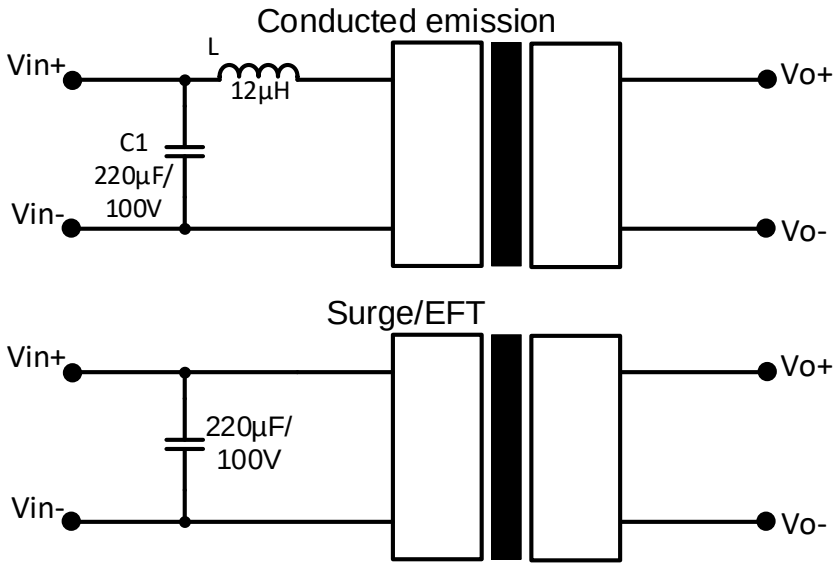

Trimming

Output voltage on single output models can be externally trimmed by utilizing the methods as shown below

Fixed Resistor

Variable Potentiometer

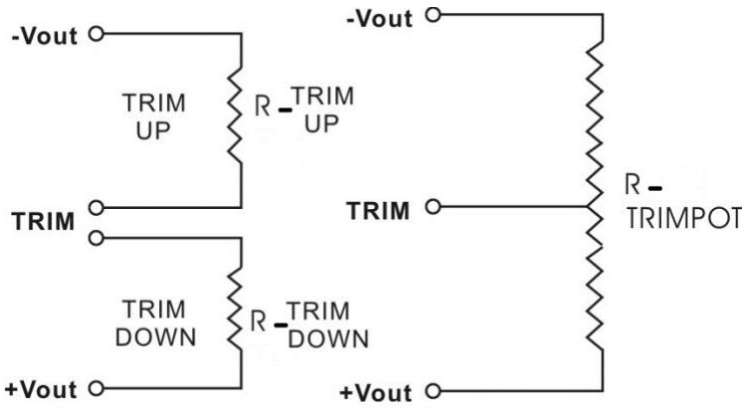

Trim Table

AM20E(W)-xx03SZ

Trim down	1	2	3	4	5	6	7	8	9	10	%
Vout=	3.267	3.234	3.201	3.168	3.135	3.102	3.069	3.036	3.003	2.970	Volts
Rtrim-down	315.932	172.257	112.528	79.806	59.153	44.930	34.539	26.616	20.374	15.330	KOhms
Trim up	1.000	2.000	3.000	4.000	5.000	6.000	7.000	8.000	9.000	10.000	%
Vout=	3.333	3.366	3.399	3.432	3.465	3.498	3.531	3.564	3.597	3.630	Volts
Rtrim-up	544.612	184.034	103.305	67.715	47.676	34.824	25.880	19.297	14.249	10.255	KOhms

AM20E(W)-xx05SZ

Trim down	1	2	3	4	5	6	7	8	9	10	%
Vout=	4.950	4.900	4.850	4.800	4.750	4.700	4.650	4.600	4.550	4.500	Volts
Rtrim-down	230.566	106.182	64.301	43.281	30.643	22.207	16.177	11.651	8.129	5.310	KOhms
Trim up	1.000	2.000	3.000	4.000	5.000	6.000	7.000	8.000	9.000	10.000	%
Vout=	5.050	5.100	5.150	5.200	5.250	5.300	5.350	5.400	5.450	5.500	Volts
Rtrim-up	244.547	113.776	70.631	49.142	36.274	27.707	21.592	17.010	13.447	10.598	KOhms

AM20E(W)-xx12SZ

Trim down	1	2	3	4	5	6	7	8	9	10	%
Vout=	11.880	11.760	11.640	11.520	11.400	11.280	11.160	11.040	10.920	10.800	Volts
Rtrim-down	327.351	142.100	83.928	55.470	38.591	27.418	19.477	13.542	8.939	5.264	KOhms
Trim up	1.000	2.000	3.000	4.000	5.000	6.000	7.000	8.000	9.000	10.000	%
Vout=	12.120	12.240	12.360	12.480	12.600	12.720	12.840	12.960	13.080	13.200	Volts
Rtrim-up	371.425	183.645	117.623	83.929	63.489	49.767	39.919	32.508	26.728	22.094	KOhms

AM20E(W)-xx15SZ

Trim down	1	2	3	4	5	6	7	8	9	10	%
Vout=	14.850	14.700	14.550	14.400	14.250	14.100	13.950	13.800	13.650	13.500	Volts
Rtrim-down	433.811	174.916	100.946	65.907	45.468	32.077	22.625	15.596	10.165	5.842	KOhms
Trim up	1.000	2.000	3.000	4.000	5.000	6.000	7.000	8.000	9.000	10.000	%
Vout=	15.150	15.300	15.450	15.600	15.750	15.900	16.050	16.200	16.350	16.500	Volts
Rtrim-up	347.293	178.523	115.235	82.084	61.683	47.863	37.882	30.336	24.430	19.682	KOhms

Derating

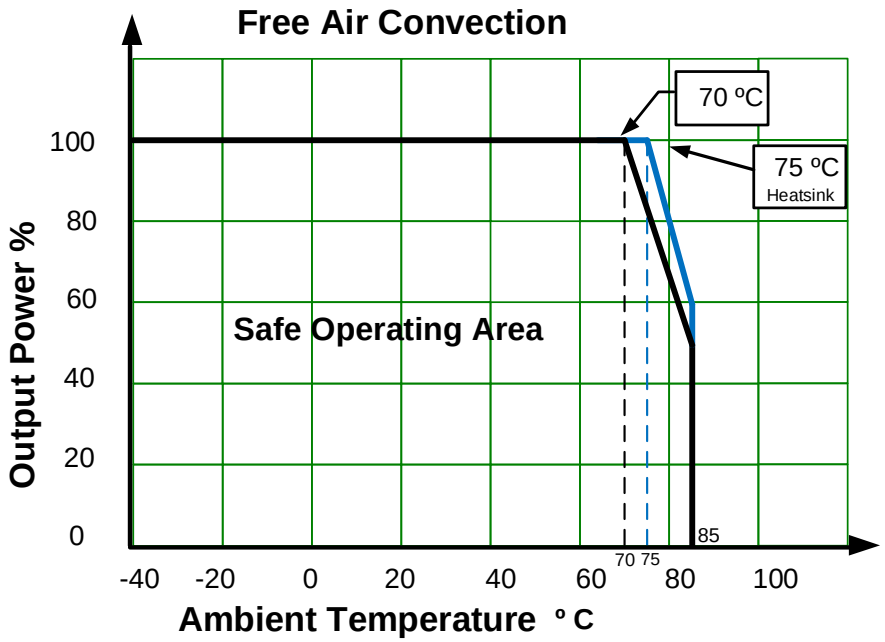

Extended temperature performance can be achieved with optional heat sink. (add suffix "–K" to part number)

NOTE: 1. Datasheets are updated as needed and as such, specifications are subject to change without notice. Once printed or downloaded, datasheets are no longer controlled by Aimtec; refer to www.aimtec.com for the most current product specifications. **2.** Product labels shown, including safety agency certifications on labels, may vary based on the date manufactured. **3.** Mechanical drawings and specifications are for reference only. **4.** All specifications are measured at an ambient temperature of 25°C, humidity<75%, nominal input voltage and at rated output load unless otherwise specified. **5.** Aimtec may not have conducted destructive testing or chemical analysis on all internal components and chemicals at the time of publishing this document. CAS numbers and other limited information are considered proprietary and may not be available for release. **6.** This product is not designed for use in critical life support systems, equipment used in hazardous environments, nuclear control systems or other such applications which necessitate specific safety and regulatory standards other the ones listed in this datasheet. **7.** Warranty is in accordance with Aimtec's standard Terms of Sale available at www.aimtec.com.