Series AM20EW-NZ

20 Watt | DC-DC Converter



FEATURES:50

- Efficiency up to 90%
- Ultra-wide 4:1 Input range
- No-load consumption ≤0.15W
- Over Current protection
- Input under voltage lockout
- On/Off Remote Control
- Over Voltage Protection
- I/Output Isolation 1500, 2250 & 3000VDC
- Operating Temperature: -40°C to +85°C
- Continuous Short Circuit protection

Models
Single output

Model	Input Voltage (V)	Max Input Current Full/No load (mA)	Output Voltage (V)	Output Current max (mA)	Isolation (VDC)	Max Capacitive Load (uF)	Efficiency (%)
AM20EW-2403S-NZ	9-36	818/45	3.3	5000	1500	10000	86
AM20EW-2405S-NZ	9-36	993/45	5	4000	1500	10000	90
AM20EW-2409S-NZ	9-36	941/10	9	2222	1500	4700	89
AM20EW-2412S-NZ	9-36	941/10	12	1667	1500	1600	89
AM20EW-2415S-NZ	9-36	941/10	15	1333	1500	1000	90
AM20EW-2424S-NZ	9-36	941/10	24	834	1500	500	90
AM20EW-4803S-NZ	18-75	409/25	3.3	5000	1500	10000	86
AM20EW-4805S-NZ	18-75	497/25	5	4000	1500	10000	90
AM20EW-4809S-NZ	18-75	485/9	9	2222	1500	4700	89
AM20EW-4812S-NZ	18-75	485/9	12	1667	1500	1600	89
AM20EW-4815S-NZ	18-75	485/9	15	1333	1500	1000	90
AM20EW-4824S-NZ	18-75	485/9	24	834	1500	500	90
AM20EW-11005S-NZ ※ ※	40-160	212/20	5	4000	1500	4020	89
AM20EW-11012S-NZ ※ ※	40-160	212/20	12	1667	1500	1600	88
AM20EW-11015S-NZ ※ ※	40-160	212/20	15	1333	1500	1000	88
AM20EW-11024S-NZ ※ ※	40-160	212/20	24	833	1500	470	88
AM20EW-11003SH22-NZ ※	40-160	188/20	3.3	5000	2250	10000	82
AM20EW-11005SH22-NZ ※	40-160	222/20	5	4000	2250	10000	84
AM20EW-11012SH22-NZ ※	40-160	219/8	12	1667	2250	1600	85
AM20EW-11015SH22-NZ ※	40-160	219/8	15	1333	2250	1000	86
AM20EW-11024SH22-NZ	40-160	219/8	24	833	2250	470	86
AM20EW-2403SH30-NZ	9-36	818/45	3.3	5000	3000	10000	86
AM20EW-2405SH30-NZ	9-36	958/45	5	4000	3000	10000	89
AM20EW-2409SH30-NZ	9-36	967/12	9	2222	3000	4700	88
AM20EW-2412SH30-NZ	9-36	967/12	12	1667	3000	1600	88
AM20EW-2415SH30-NZ	9-36	967/12	15	1333	3000	1000	89
AM20EW-2418SH30-NZ ※	9-36	969/20	18	1111	3000	680	89
AM20EW-2424SH30-NZ	9-36	967/12	24	834	3000	500	89
AM20EW-4803SH30-NZ	18-75	409/25	3.3	5000	3000	10000	86
AM20EW-4805SH30-NZ	18-75	484/25	5	4000	3000	10000	88
AM20EW-4812SH30-NZ	18-75	484/8	12	1667	3000	1600	88
AM20EW-4815SH30-NZ	18-75	484/8	15	1333	3000	1000	89
AM20EW-4824SH30-NZ	18-75	484/8	24	834	3000	500	89

Models
Dual output

Model	Input Voltage (V)	Max Input current Full/No load (mA)	Output Voltage (V)	Output Current max (mA)	Isolation (VDC)	Max Capacitive Load(uF)	Efficiency (Typ.) (%)
AM20EW-2405D-NZ	9-36	993/45	±5	±2000	1500	±4800	86
AM20EW-2409D-NZ	9-36	941/10	±9	±1111	1500	±1000	88
AM20EW-2412D-NZ	9-36	941/10	±12	±834	1500	±800	88
AM20EW-2415D-NZ	9-36	941/10	±15	±667	1500	±625	88

AM20EW-4805D-NZ	18-75	497/25	±5	±2000	1500	±4800	86
AM20EW-4812D-NZ	18-75	485/9	±12	±834	1500	±800	88
AM20EW-4815D-NZ	18-75	485/9	±15	±667	1500	±625	89
AM20EW-11012DH30-NZ ※	40-160	217/8	±12	±833	3000	±680	85
AM20EW-11015DH30-NZ ※	40-160	217/8	±15	±667	3000	±470	86
AM20EW-11024DH30-NZ ※	40-160	217/8	±24	±417	3000	±220	86

Add suffix "-K" for optional heatsink for metal cased models only.
***Add suffix "-ST" for optional screw terminal bottom plate or "-STD" for optional DIN Rail screw terminal bottom plate and reverse voltage protection. Their minimum input voltage and startup voltage have to be increased by 1V.**
****Add suffix "-K-ST" for optional heatsink and screw terminal bottom plate(for metal cased models only) or "-K-STD" for optional heatsink and DIN Rail screw terminal bottom plate and reverse voltage protection(for metal cased models only).**
*****Models marked with ※ are not recommended for new designs. The optional "-K", "-ST", "-STD", "-K-ST" or "-K-STD" packages for models marked with ※ have been obsoleted.**

NOTE: All specifications in this datasheet are measured at an ambient temperature of 25°C, humidity<75%, nominal input voltage and at rated output load unless otherwise specified.

Input Specifications

Parameters	Nominal	Typical	Maximum	Units
Voltage range	24 48 110	9-36 18-75 40-160		VDC
Filter		π(Pi) Network		
Startup time		10		ms
Absolute Maximum Rating	24 48 110		-0.7-50 -0.7-100 -0.7-180	VDC
Peak Input Voltage time			1	s
On/Off control	ON – open or 3.5-12VDC ; OFF – short to -Vin or 0-1.2VDC, Idle current: 110Vin 1500 isolated models - 1mA; Others - 2~7mA			
Input under voltage lockout	24 48 110V, 2250V & 3000V Isolation		5.5-6.5 12-15.5 28-33	VDC
Input reflected current		30		mA

Isolation Specifications

Parameters	Conditions	Typical	Maximum	Units
Tested I/O voltage	60 sec, 1mA	1500, 2250 & 3000		VDC
Tested I/FG & O/FG voltage	2250V Isolation models only, 60 sec, 1mA	1600		VDC
	110Vin 3000V isolation models only, 60sec, 1mA	1500		
Resistance	500VDC I/O Isolation	>1000		MOhm
Capacitance	All 1500VDC Isolation models 100KHz/0.1V 110Vin 2250V & 3000V Isolation, I/O, 100KHz/0.1V 24/48Vin 3000VDC Isolation models 100KHz/0.1V	2000 2200 500		pF

Output Specifications

Parameters	Conditions	Typical	Maximum	Units
Voltage accuracy	110Vin, 3000V isolation, positive output	±1	±2	%
	Others	±1	±3	
Balanced load		±0.5	±1.5	%
Over voltage protection	Zener Diode Clamp	110	160	%
Over current protection		120	210	% of Io
Short Circuit protection	Continuous, hiccup			
Short circuit restart	Auto-Recovery			
Line voltage regulation (single)	Full load, LL-HL	±0.2	±0.5	% of Vin
Line voltage regulation (dual)	110Vin, 3000V isolation, positive output	±0.2	±0.5	% of Vin
	Full load, LL-HL	±0.5	±1	
Load voltage regulation (single)	5% to 100% load for 1500VDC models & 0% to 100% load for others	±0.5	±1	%
Load voltage regulation (dual)	110Vin, 3000V isolation, positive output	±0.5	±1	%

	5% to 100% load	±0.5	±1.5	
Cross regulation	50% 1st load, 10-100% 2nd load		±5	%
Temperature coefficient			±0.03	%/°C
Ripple & Noise	20MHz Bandwidth, 5% to 100% load		100	mV p-p
Voltage adjustment range			±10	%
Transient recovery time	25% load step change, 2250V/3000V isolation 25% load step change, others		500 800	µS
Transient recovery deviation	25% load step change: 3.3, 5, ±5Vout 25% load step change: others	±5 ±3	±8 ±5	%

General Specifications

Parameters	Conditions	Typical	Maximum	Units
Switching frequency	100% load, 24 & 48 Vin 100% load, 110Vin	270 300		KHz
Operating temperature	See derating curve	-40 to +85		°C
Storage temperature	-55 to +125			°C
Maximum case temperature			105	°C
Cooling	Free air convection			
Humidity			95	% RH
Case material	24/48Vin, 3000VDC models Other models	Plastic (UL94-V0) Aluminum Alloy		
Dimensions (L x W x H)	Aluminium case Plastic case Optional packages	2 x 1 x 0.47 inches 50.8 x 25.4 x 11.8 mm 2.03 x 1.04 x 0.47 inches 51.5 x 26.5 x 12 mm See dimensions drawing		
Weight	Pin mountable without heatsink	28 (110Vin, 1500VDC Isolated models) 26 (Other metal case models) 24 (3000VDC Isolated models)		g
	Pin mountable with heatsink	36 (110Vin, 1500VDC Isolated models) 34 (Other metal case models) 32 (3000VDC Isolated models)		
	-ST option without heatsink	50 (110Vin, 1500VDC Isolated models) 48 (Other metal case models) 46 (3000VDC Isolated models)		
	-ST option with heatsink	58 (110Vin, 1500VDC Isolated models) 56 (Other metal case models) 54 (3000VDC Isolated models)		
	-STD option without heatsink	70 (110Vin, 1500VDC Isolated models) 68 (Other metal case models) 66 (3000VDC Isolated models)		
	-STD option with heatsink	78 (110Vin, 1500VDC Isolated models) 76 (Other metal case models) 74 (3000VDC Isolated models)		
MTBF	>1,000,000 hours (MIL-HDBK -217F, Ground Benign, t=+25°C)			
Maximum soldering temperature	1.5mm from case for 10 sec		300	°C

Environment Specification

Test	Parameters	Conditions
Vibration	Test mode	10-55Hz
	Acceleration	10g, 30min, every axis tested
Vibration (110 Vin/2250VDC isolation)	IEC61373 car body 1 B mold	

Safety Specifications

Parameters	
Agency approvals	CE (With exception of 110Vin 3000VDC isolation models)
Standards	Designed to meet UL 62368-1 (with exception of models marked with ※), EN 55032, Class B, with EMC recommended circuit EN 50121-3-2, 150kHz-500kHz 99dBuV, 30MHz-230MHz 40dBuV/m at 10m (110Vin, 2250VDC models approved with recommended circuit) (24/48Vin, 1500VDC & 110Vin, 3000 VDC models meet with recommended circuit)

	EN 55016-2-1, 500kHz-30MHz 93dBuV, 230MHz-1GHz 47dBuV/m at 10m (110Vin, 2250VDC models approved with recommended cirucit) (24/48Vin, 1500VDC & 110Vin, 3000 VDC models meet with recommended cirucit)	
	Information technology Equipment	IEC/UL 60950-1
	Railway application	EN50155 (110Vin, 2250VDC models compliant) (24/48Vin, 1500VDC and 110Vin, 3000 VDC models meet)
	Electrostatic Discharge Immunity	IEC 61000-4-2, Contact ±6KV (110Vin 2250/3000VDC Isolation), Contact ±4KV (Others), Criteria B EN50121-3-2, Contact ±6KV/Air ±8KV(24/48Vin 1500VDC and 110Vin 2250/3000VDC Isolation), Criteria B
	RF, Electromagnetic Field Immunity	IEC 61000-4-3, 20V/m(110Vin 3000VDC isolation), 10V/m(Others), Criteria A EN50121-3-2, 20V/m (24/48Vin 1500VDC & 110Vin 2250/3000VDC Isolation), Criteria A
	Electrical Fast Transient / Burst Immunity	IEC 61000-4-4, ±4KV (110Vin 2250/3000 VDC Isolation), ±2KV (Others), Criteria B, with external filter EN50121-3-2, ±2KV (24/48Vin 1500VDC & 110Vin 2250/3000VDC Isolation), Criteria A
	Surge Immunity	IEC 61000-4-5, ±2KV, Criteria B, with external filter EN50121-3-2, L-L ±1KV (24/48Vin 1500VDC & 110Vin 2250/3000VDC Isolation), Criteria B
	RF, Conducted Disturbance Immunity	IEC 61000-4-6, 10 Vrms (2250/3000 VDC Isolated models), 3Vrms (Others), Criteria A EN50121-3-2, 0.15MHz ~ 80MHz, 10 Vrms (24/48Vin 1500VDC & 110Vin 2250/3000VDC Isolation), Criteria B
	Voltage dips, Short Interruptions & Voltage variations Immunity	IEC 61000-4-29, 0-70%, Criteria B

Pin Out Specifications

Pin	Single	Dual
1	On/Off Control	On/Off Control
2	-Vin	-Vin
3	+Vin	+Vin
4	-Vout	-Vout
5	Trim	Common
6	+Vout	+Vout

Dimensions metal case

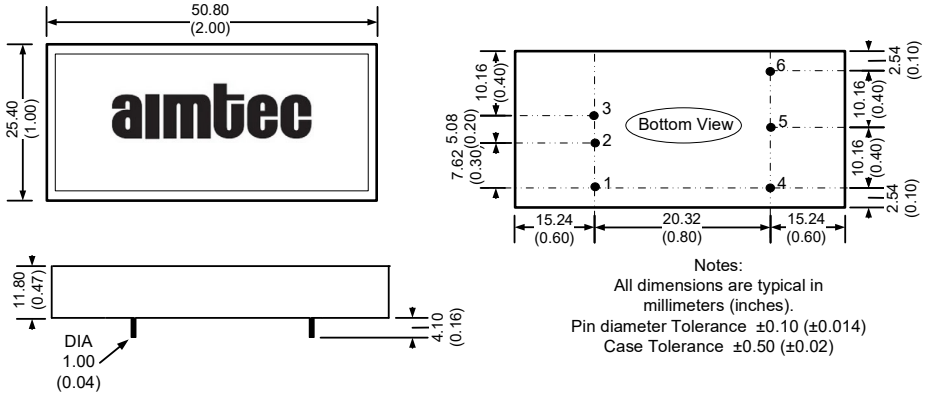

Notes:
All dimensions are typical in millimeters (inches).
Pin diameter Tolerance ±0.10 (±0.014)
Case Tolerance ±0.50 (±0.02)

Dimensions metal case for 110Vin 3000V isolation dual output models

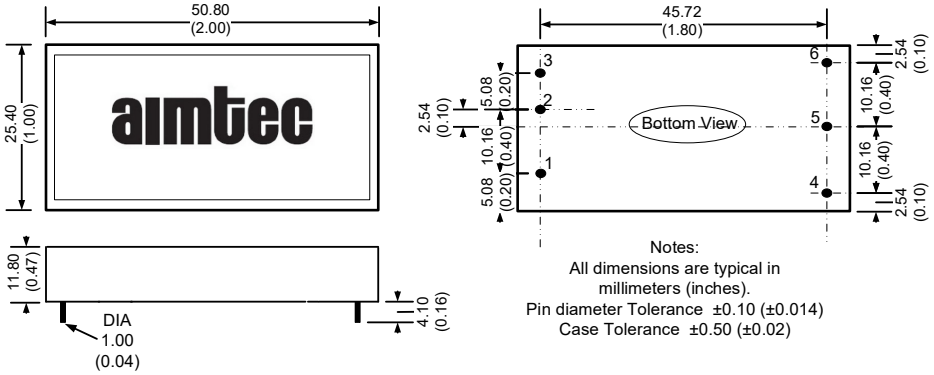

Notes:
All dimensions are typical in millimeters (inches).
Pin diameter Tolerance ±0.10 (±0.014)
Case Tolerance ±0.50 (±0.02)

Dimensions plastic case

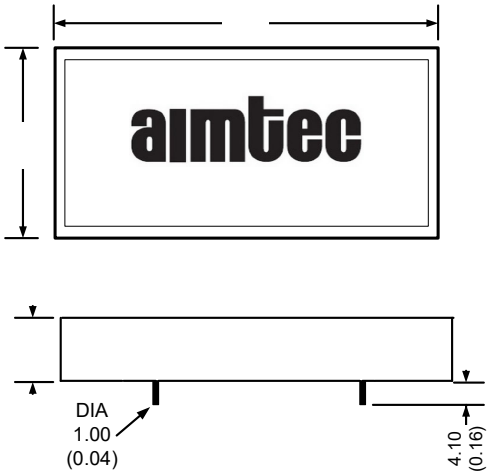

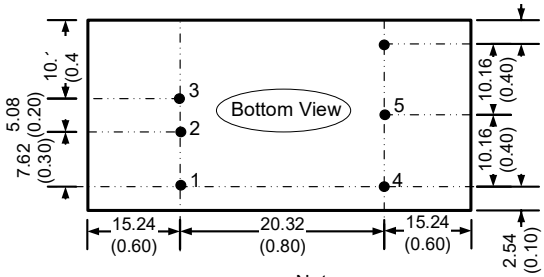

Notes:
All dimensions are typical in millimeters (inches).
Pin diameter Tolerance ±0.10 (±0.004)
Case Tolerance ±0.50 (±0.02)

Optional -K heatsink

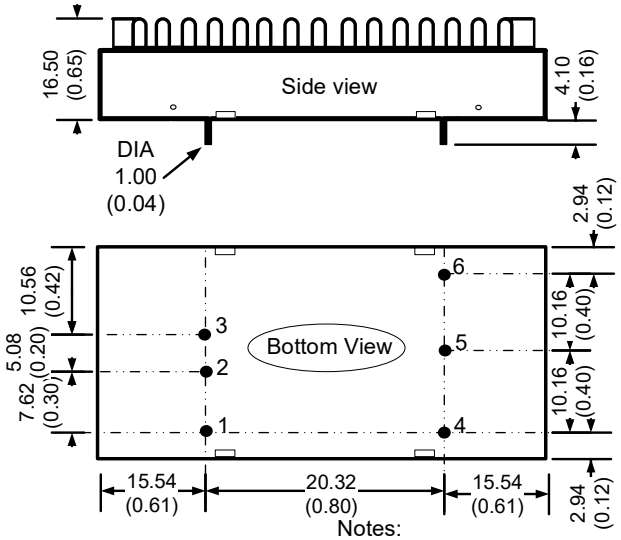

Notes:
All dimensions are typical in millimeters (inches).
Pin diameter Tolerance: ±0.10 (±0.004)
Case Tolerance: ±0.50 (±0.02)

Optional -K heatsink for 110V 3000V isolation dual output models

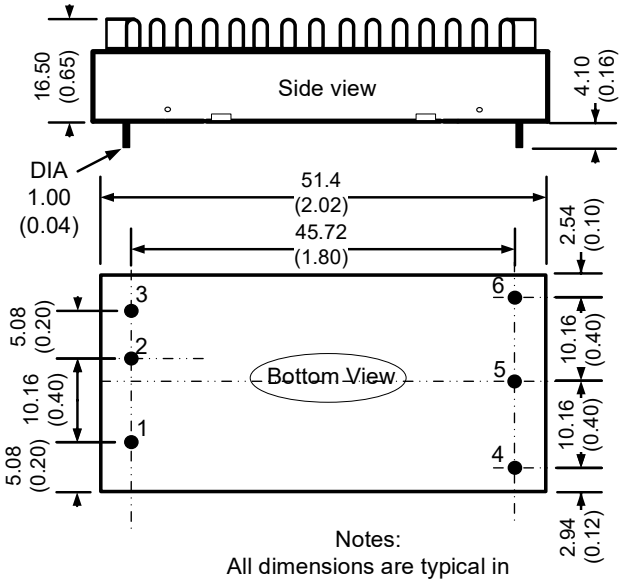

Notes:
All dimensions are typical in millimeters (inches).
Pin diameter Tolerance: ±0.10 (±0.004)
Case Tolerance: ±0.50 (±0.02)

Dimensions with -ST options

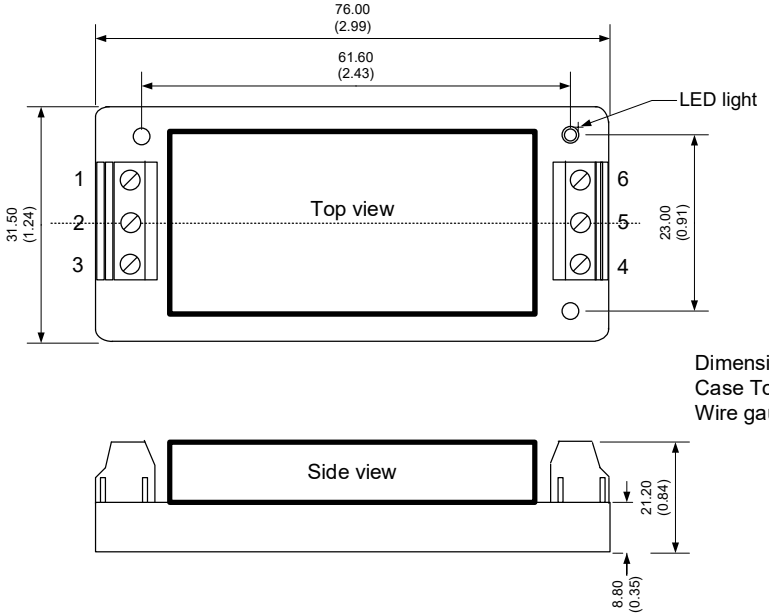

Dimensions: mm (inch)
Case Tolerance:± 0.50 (0.02)
Wire gauge: 24-12AWG

Pin Out Specifications

Pin	Single	Single
1	On/Off Control	On/Off Control
2	-Vin	-Vin
3	+Vin	+Vin
4	+ Vout	+ Vout
5	Trim	Common
6	- Vout	- Vout

Dimensions with -STD options

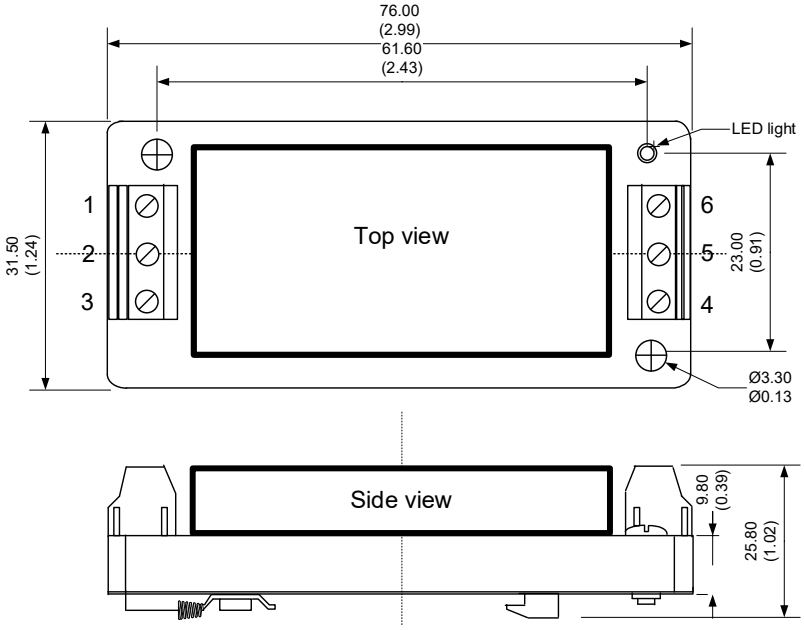

Dimensions: mm (inch)
Case Tolerance:± 1.00 (0.04)
Wire gauge: 24-12AWG

Pin Out Specifications

Pin	Single	Single
1	On/Off Control	On/Off Control
2	-Vin	-Vin
3	+Vin	+Vin
4	+ Vout	+ Vout
5	Trim	Common
6	- Vout	- Vout

Dimensions with heatsink and -ST options

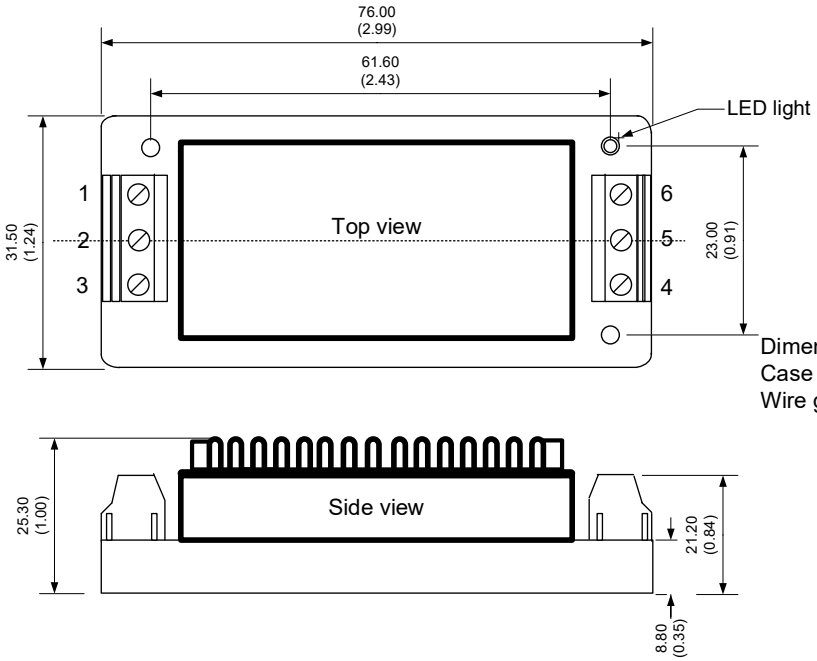

Dimensions: mm (inch)
Case Tolerance:± 0.50 (0.02)
Wire gauge: 24-12AWG

Pin Out Specifications

Pin	Single	Single
1	On/Off Control	On/Off Control
2	-Vin	-Vin
3	+Vin	+Vin
4	+ Vout	+ Vout
5	Trim	Common
6	- Vout	- Vout

Dimensions with heatsink and -STD options

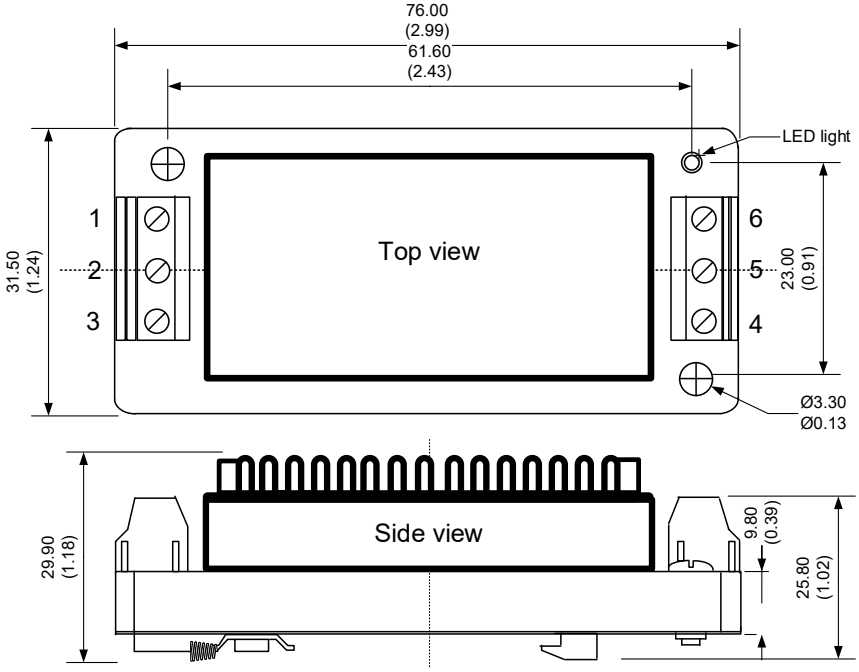

Dimensions: mm (inch)
Case Tolerance:± 0.50 (0.02)
Wire gauge: 24-12AWG

Pin Out Specifications

Pin	Single	Single
1	On/Off Control	On/Off Control
2	-Vin	-Vin
3	+Vin	+Vin
4	+ Vout	+ Vout
5	Trim	Common
6	- Vout	- Vout

Trimming

Output voltage can be externally trimmed by utilizing the methods as shown below

Fixed Resistor

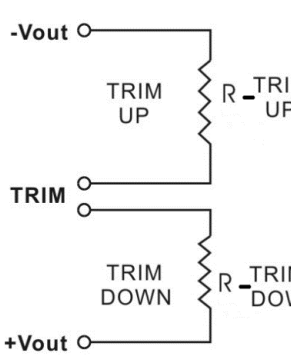

Variable Potentiometer

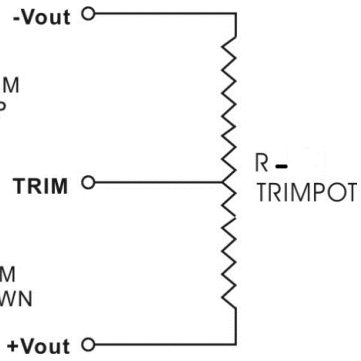

Leave open if not used.

AM20EW-xx03S-NZ, xx=24 or 48

Trim down %	1	2	3	4	5	6	7	8	9	10
Vout (VDC)	3.27	3.23	3.2	3.17	3.14	3.1	3.07	3.04	3	2.97
Rt down (KΩ)	124.138	73.217	53.983	41.497	32.737	24.449	19.839	16.148	12.236	9.856
Trim up %	1	2	3	4	5	6	7	8	9	10
Vout (VDC)	3.33	3.37	3.4	3.43	3.47	3.5	3.53	3.56	3.6	3.63
Rt up (KΩ)	-556.59	194.738	89.364	55.05	34.131	25.35	19.357	15.006	10.773	8.367

AM20EW-11003SH22-NZ

Trim down %	1	2	3	4	5	6	7	8	9	10
Vout (VDC)	3.267	3.234	3.201	3.168	3.135	3.102	3.069	3.036	3.003	2.97
Rt down (KΩ)	210.002	103.334	72.327	54.213	42.335	31.667	25.963	21.505	16.884	14.124
Trim up %	1	2	3	4	5	6	7	8	9	10
Vout (VDC)	3.333	3.366	3.399	3.432	3.465	3.498	3.531	3.564	3.597	3.63
Rt up (KΩ)	369.179	96.88	59.466	41.454	28.235	22.058	17.6	14.23	10.837	8.857

AM20EW-xx05S-NZ, xx=24 or 48

Trim down %	1	2	3	4	5	6	7	8	9	10
Vout (VDC)	4.95	4.9	4.85	4.8	4.75	4.7	4.65	4.6	4.55	4.5
Rt down (KΩ)	105.18	52.153	31.996	21.377	14.822	10.372	7.154	4.719	2.811	1.276
Trim up %	1	2	3	4	5	6	7	8	9	10
Vout (VDC)	5.05	5.1	5.15	5.2	5.25	5.3	5.35	5.4	5.45	5.5
Rt up (KΩ)	176.356	71.279	41.973	28.2	20.197	14.967	11.281	8.543	6.43	4.749

AM20EW-11005S-NZ

Trim down %	1	2	3	4	5	6	7	8	9	10
Vout (VDC)	4.95	4.9	4.85	4.8	4.75	4.7	4.65	4.6	4.55	4.5
Rt down (KΩ)	96.08	49.349	30.67	20.616	14.333	10.034	6.909	4.533	2.667	1.162
Trim up %	1	2	3	4	5	6	7	8	9	10
Vout (VDC)	5.05	5.1	5.15	5.2	5.25	5.3	5.35	5.4	5.45	5.5

Rt up (KΩ)	205.698	76.406	44.023	29.296	20.879	15.431	11.617	8.798	6.63	4.91

AM20EW-11005SH22-NZ

Trim down %	1	2	3	4	5	6	7	8	9	10
Vout (VDC)	4.95	4.9	4.85	4.8	4.75	4.7	4.65	4.6	4.55	4.5
Rt down (KΩ)	105.181	52.154	31.997	21.378	14.823	10.373	7.155	4.719	2.811	1.277
Trim up %	1	2	3	4	5	6	7	8	9	10
Vout (VDC)	5.05	5.1	5.15	5.2	5.25	5.3	5.35	5.4	5.45	5.5
Rt up (KΩ)	176.356	71.279	41.974	28.2	20.198	14.967	11.281	8.544	6.43	4.749

AM20EW-xx09S-NZ, xx=24 or 48

Trim down %	1	2	3	4	5	6	7	8	9	10
Vout (VDC)	8.91	8.82	8.73	8.64	8.55	8.46	8.37	8.28	8.19	8.1
Rt down (KΩ)	375.532	207.429	139.156	102.145	78.924	62.996	51.392	42.562	35.616	30.011
Trim up %	1	2	3	4	5	6	7	8	9	10
Vout (VDC)	9.09	9.18	9.27	9.36	9.45	9.54	9.63	9.72	9.81	9.9
Rt up (KΩ)	314.531	112.638	64.147	42.357	29.974	21.989	16.412	12.296	9.134	6.628

AM20EW-xx12S-NZ, xx=24 or 48

Trim down %	1	2	3	4	5	6	7	8	9	10
Vout (VDC)	11.88	11.76	11.64	11.52	11.4	11.28	11.16	11.04	10.92	10.8
Rt down (KΩ)	496.091	301.451	212.527	161.585	128.573	105.441	88.332	75.163	64.715	56.223
Trim up %	1	2	3	4	5	6	7	8	9	10
Vout (VDC)	12.12	12.24	12.36	12.48	12.6	12.72	12.84	12.96	13.08	13.2
Rt up (KΩ)	706.435	158.92	83.878	54.074	38.076	28.095	21.274	16.316	12.551	9.594

AM20EW-11012S-NZ

Trim down %	1	2	3	4	5	6	7	8	9	10
Vout (VDC)	11.88	11.76	11.64	11.52	11.4	11.28	11.16	11.04	10.92	10.8
Rt down (KΩ)	505.529	303.041	211.851	159.978	126.504	103.114	85.849	72.581	62.066	53.527
Trim up %	1	2	3	4	5	6	7	8	9	10
Vout (VDC)	12.12	12.24	12.36	12.48	12.6	12.72	12.84	12.96	13.08	13.2
Rt up (KΩ)	614.769	150.097	78.994	50.198	34.607	24.832	18.13	13.249	9.536	6.616

AM20EW-11012SH22-NZ

Trim down %	1	2	3	4	5	6	7	8	9	10
Vout (VDC)	11.88	11.76	11.64	11.52	11.4	11.28	11.16	11.04	10.92	10.8
Rt down (KΩ)	496.092	301.452	212.527	161.585	128.573	105.442	88.332	75.164	64.716	56.223
Trim up %	1	2	3	4	5	6	7	8	9	10
Vout (VDC)	12.12	12.24	12.36	12.48	12.6	12.72	12.84	12.96	13.08	13.2
Rt up (KΩ)	706.435	158.92	83.879	54.075	38.077	28.095	21.274	16.317	12.552	9.595

AM20EW-xx15S-NZ, xx=24 or 48

Trim down %	1	2	3	4	5	6	7	8	9	10
Vout (VDC)	14.85	14.7	14.55	14.4	14.25	14.1	13.95	13.8	13.65	13.5
Rt down (KΩ)	634.883	400.637	288.513	222.758	179.536	148.959	126.187	108.568	94.532	83.086
Trim up %	1	2	3	4	5	6	7	8	9	10
Vout (VDC)	15.15	15.3	15.45	15.6	15.75	15.9	16.05	16.2	16.35	16.5
Rt up (KΩ)	1460.098	192.573	96.641	61.354	43.016	31.781	24.191	18.72	14.59	11.361

AM20EW-11015S-NZ

Trim down %	1	2	3	4	5	6	7	8	9	10
Vout (VDC)	14.85	14.7	14.55	14.4	14.25	14.1	13.95	13.8	13.65	13.5
Rt down (KΩ)	570.165	371.335	271.179	210.846	170.524	141.673	120.008	103.142	89.638	78.584
Trim up %	1	2	3	4	5	6	7	8	9	10
Vout (VDC)	15.15	15.3	15.45	15.6	15.75	15.9	16.05	16.2	16.35	16.5
Rt up (KΩ)	3208.668	231.297	104.85	63.553	43.061	30.815	22.672	16.865	12.516	9.136

AM20EW-11015SH22-NZ

Trim down %	1	2	3	4	5	6	7	8	9	10
Vout (VDC)	14.85	14.7	14.55	14.4	14.25	14.1	13.95	13.8	13.65	13.5
Rt down (KΩ)	974.008	517.391	346.387	256.863	201.789	164.487	137.551	117.187	101.251	88.44
Trim up %	1	2	3	4	5	6	7	8	9	10
Vout (VDC)	15.15	15.3	15.45	15.6	15.75	15.9	16.05	16.2	16.35	16.5
Rt up (KΩ)	283.713	117.996	70.541	48.045	34.918	26.315	20.242	15.725	12.235	9.456

AM20EW-2418SH30-NZ

Trim down %	1	2	3	4	5	6	7	8	9	10
Vout (VDC)	17.82	17.64	17.46	17.28	17.1	16.92	16.74	16.56	16.38	16.2
Rt down (KΩ)	846.143	527.851	378.438	291.68	234.996	195.059	165.403	142.511	124.305	109.479
Trim up %	1	2	3	4	5	6	7	8	9	10
Vout (VDC)	18.18	18.36	18.54	18.72	18.9	19.08	19.26	19.44	19.62	19.8
Rt up (KΩ)	1064.151	185.231	94.388	59.784	41.54	30.271	22.62	17.085	12.895	9.613

AM20EW-xx24S-NZ, xx=24 or 48

Trim down %	1	2	3	4	5	6	7	8	9	10
Vout (VDC)	23.76	23.52	23.28	23.04	22.8	22.56	22.32	22.08	21.84	21.6
Rt down (KΩ)	1038.047	638.015	455.256	350.553	282.702	235.158	199.992	172.928	151.453	134
Trim up %	1	2	3	4	5	6	7	8	9	10
Vout (VDC)	24.24	24.48	24.72	24.96	25.2	25.44	25.68	25.92	26.16	26.4
Rt up (KΩ)	816.889	179.913	94.338	60.463	42.306	30.987	23.256	17.64	13.375	10.027

AM20EW-11024S-NZ

Trim down %	1	2	3	4	5	6	7	8	9	10
Vout (VDC)	23.76	23.52	23.28	23.04	22.8	22.56	22.32	22.08	21.84	21.6
Rt down (KΩ)	1135.537	730.699	532.922	415.701	338.146	283.038	241.862	209.929	184.441	163.624
Trim up %	1	2	3	4	5	6	7	8	9	10
Vout (VDC)	24.24	24.48	24.72	24.96	25.2	25.44	25.68	25.92	26.16	26.4
Rt up (KΩ)	2871.219	219.961	106.182	66.054	45.551	33.104	24.745	18.744	14.226	10.703

AM20EW-11024SH22-NZ

Trim down %	1	2	3	4	5	6	7	8	9	10
Vout (VDC)	23.76	23.52	23.28	23.04	22.8	22.56	22.32	22.08	21.84	21.6
Rt down (KΩ)	1286.2	792.123	565.867	436.104	351.954	292.963	249.316	215.714	189.047	167.37
Trim up %	1	2	3	4	5	6	7	8	9	10
Vout (VDC)	24.24	24.48	24.72	24.96	25.2	25.44	25.68	25.92	26.16	26.4
Rt up (KΩ)	816.889	179.914	94.338	60.464	42.307	30.988	23.257	17.64	13.376	10.027

Derating

AM20EW-11005SH22-NZ

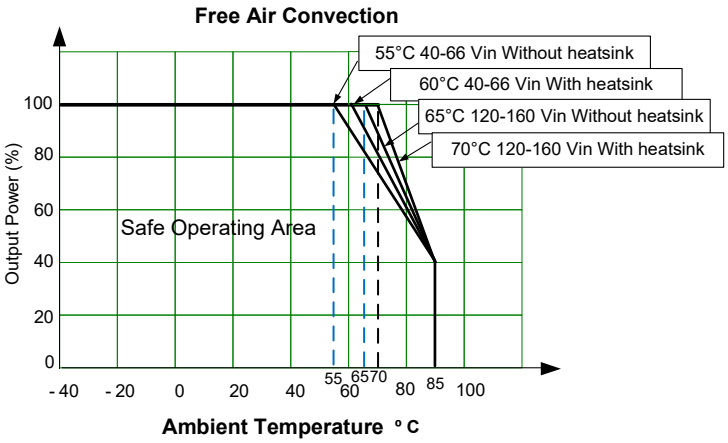

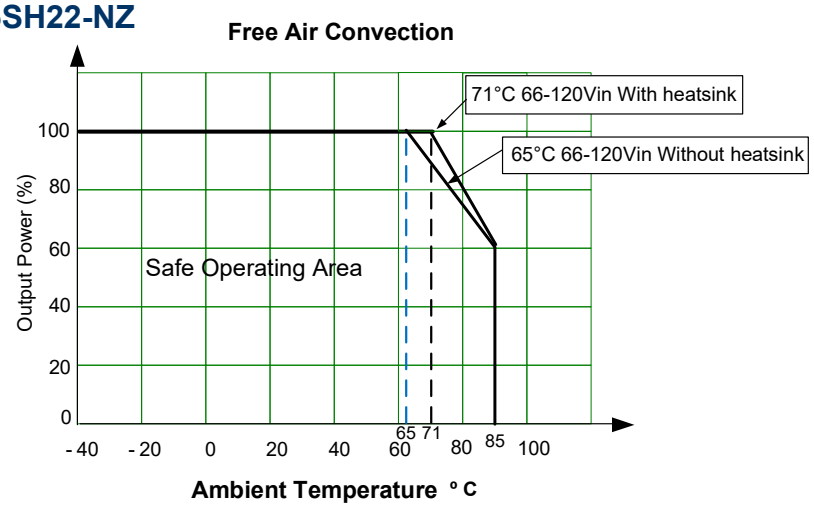

AM20EW-11003SH22-NZ

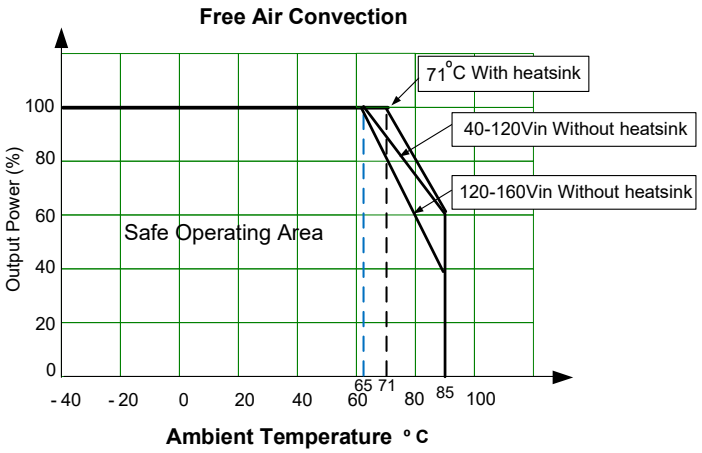

AM20EW-110xxDH30-NZ

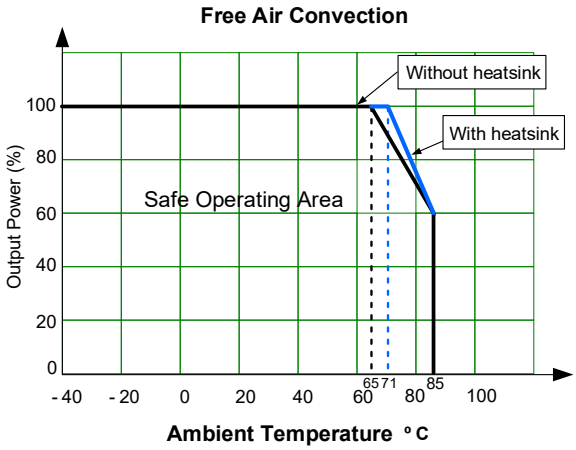

Others

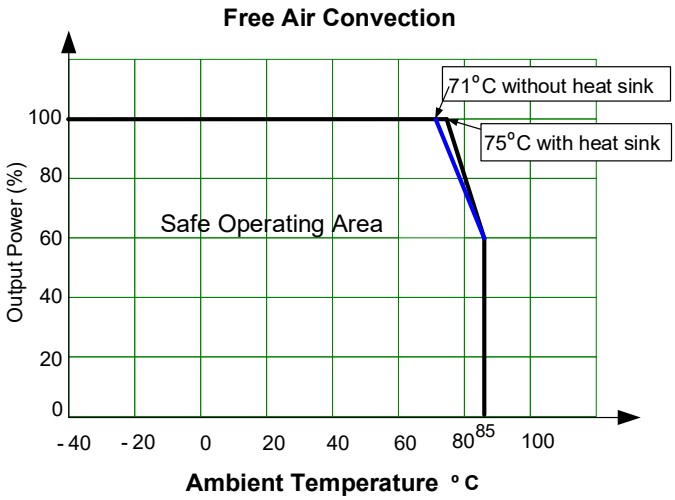

Typical application circuit

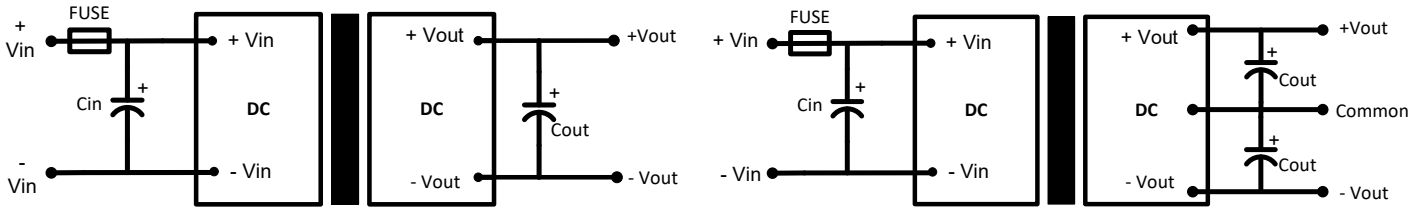

Model	FUSE	Cin	Single Vout	Cout	Dual Vout	Cout
24 Vin	-	100 µF / 50V	3.5 / 5V	470µF / 16V	±5V	220µF / 16V
48 Vin	-	100 µF / 100V	9V	220µF / 16V	±9V	100µF / 16V
			12 / 15V	220µF / 25V	±12V / ±15V	100µF / 25V
			24V	100µF / 50V		
110Vin	2A Slow blow	10µF - 47µF	3.5 / 5V	470µF / 16V	±12V / ±15V	220µF / 25V
			12 / 15V	220µF / 25V	±24V	100µF / 50V
			24V	100µF / 50V		

EMC recommended circuit for 24 & 48V input 1500VDC isolation models

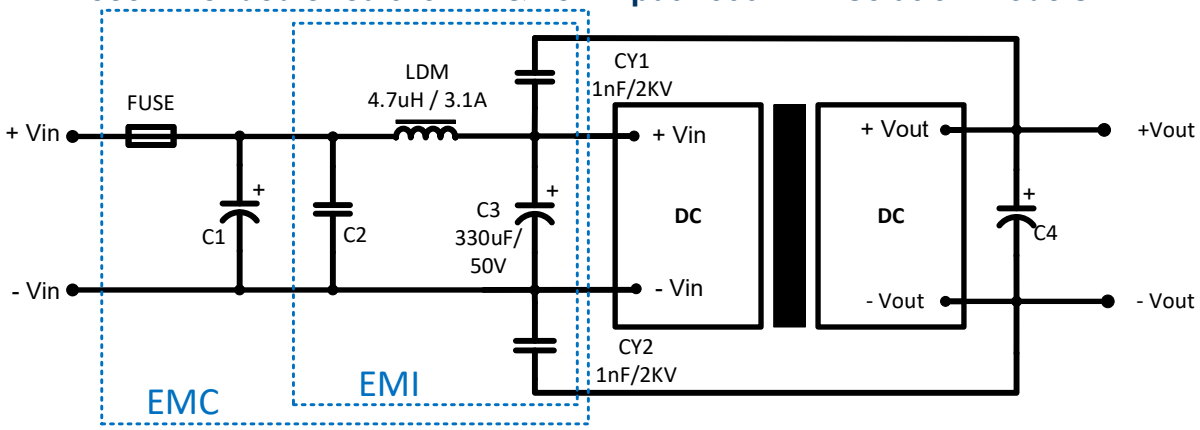

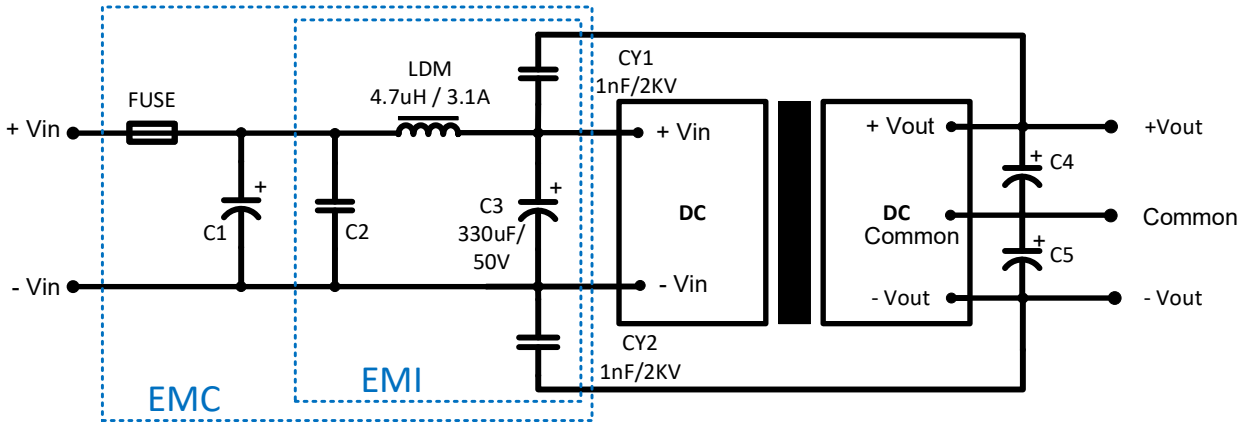

Model	C1/C3	C2	C4/C5
24 Vin	330 µF / 50V	1 µF / 50V	Refer to Cout in typical application circuit
48 Vin	330 µF / 100V	1 µF / 100V	

EMC recommended circuit for 110V input 1500VDC isolation models

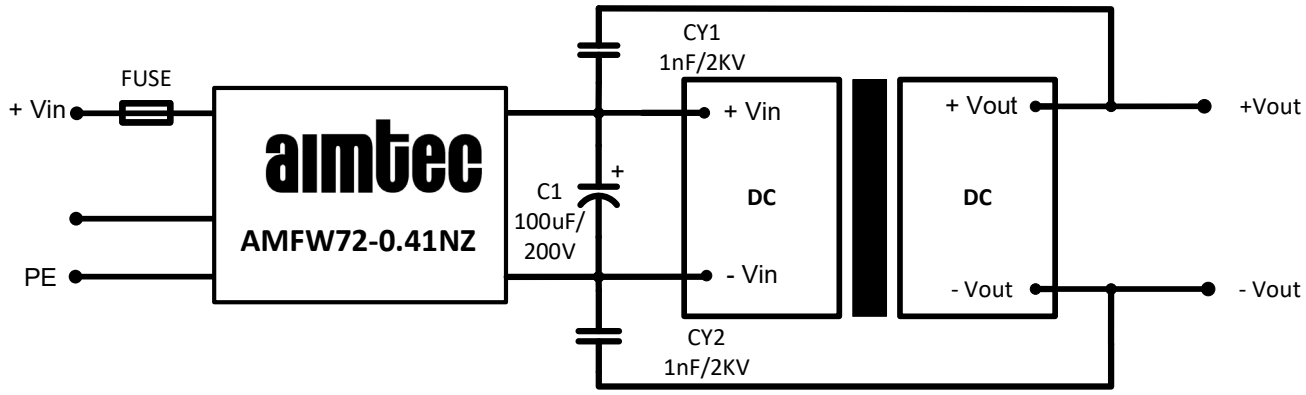

EMC recommended circuit with EN60950 compliant for 110Vin 2250VDC Isolation

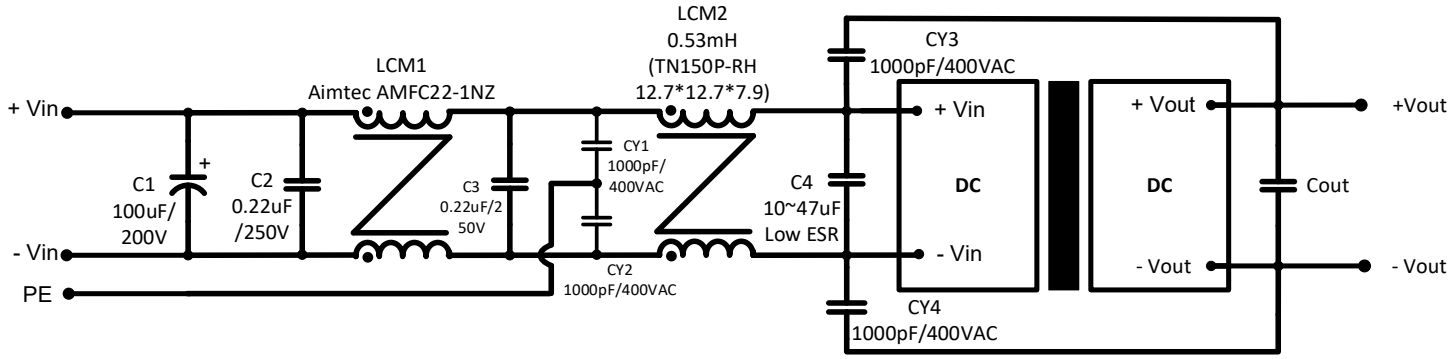

Vout	Cout
3.3V/5V	470 µF
12V/15V	220 µF
24V	100 µF

EMC recommended circuit with EN50155 compliant for 110Vin 2250VDC Isolation

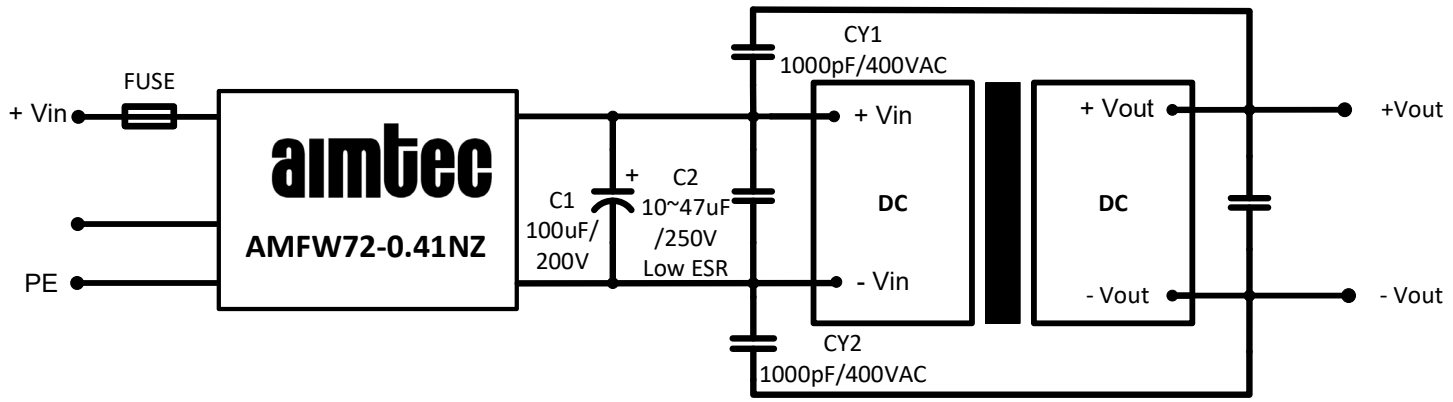

Vout	Cout
3.3V/5V	470 µF
9V/12V/15V	220 µF
18V/24V	100 µF

EMC recommended circuit for 24 & 48V input 3000VDC isolation models

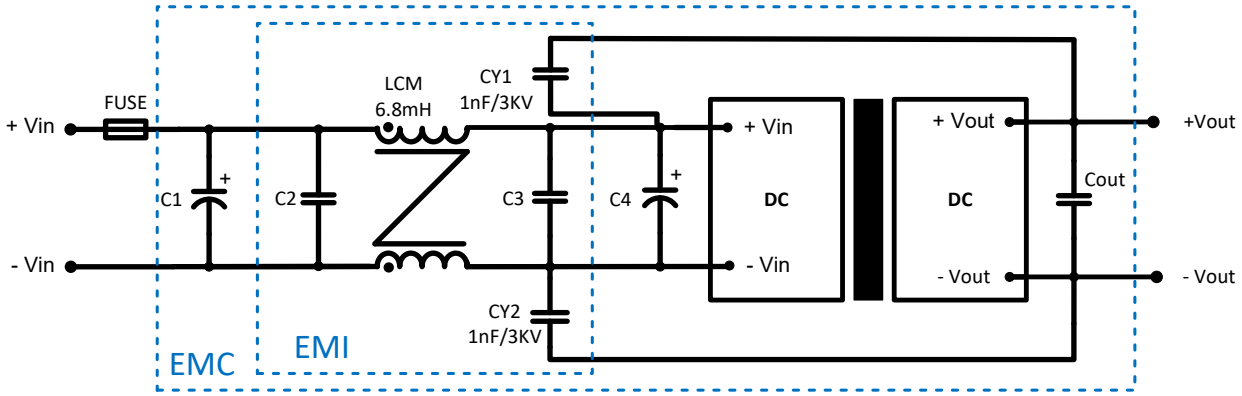

Model	C1	C2 & C3	C4
24 Vin	1000 µF / 50V	1 µF / 50V	330 µF / 50V
48 Vin	680 µF / 100V	1 µF / 100V	330 µF / 100V

Vout	Cout
3.3V/5V	470 µF
9V/12V/15V	220 µF
18V/24V	100 µF

EMC recommended circuit with EN60950 compliant for 110V input 3000VDC isolation models

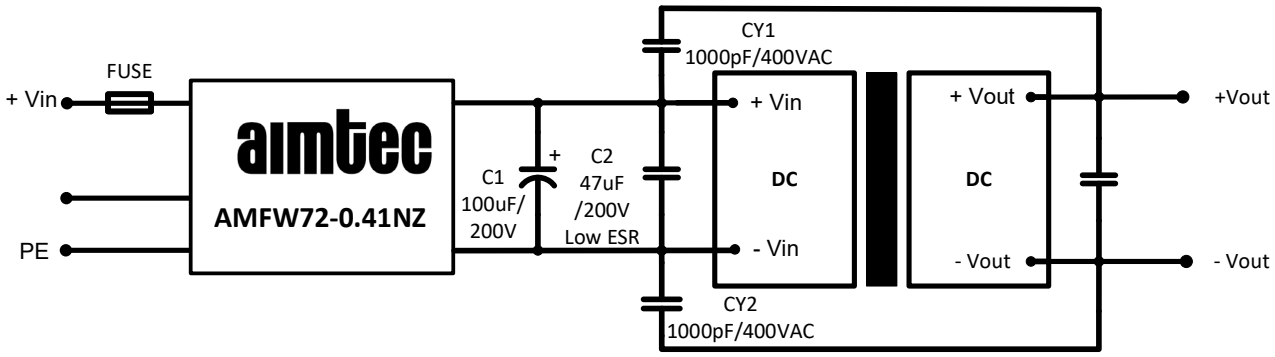

Vout	Cout
±12 Vout	220uF/25V
±15 & ±24 Vout	100uF/35V

EMC recommended circuit with EN50155 compliant for 110V input 3000VDC isolation models

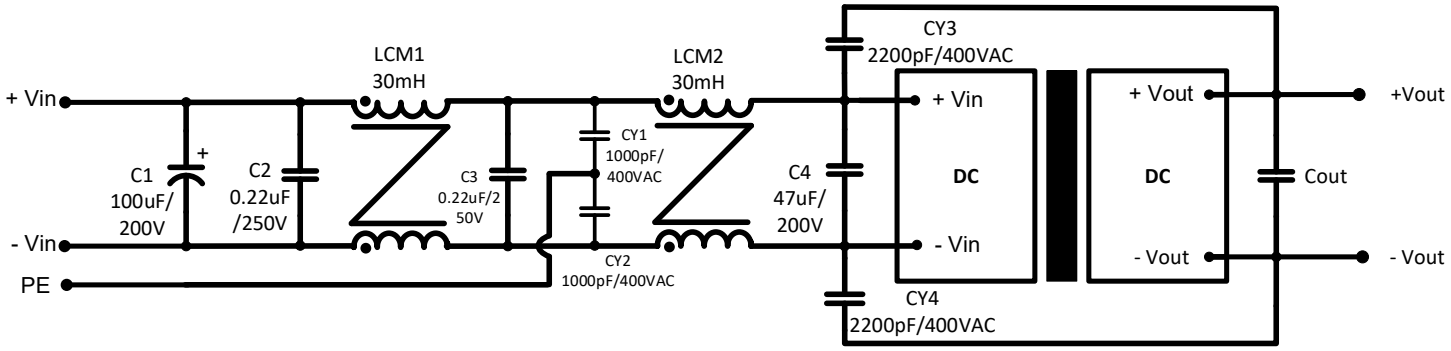

Vout	Cout
±12 Vout	220uF/25V
±15 & ±24 Vout	100uF/35V

NOTE: 1. Datasheets are updated as needed and as such, specifications are subject to change without notice. Once printed or downloaded, datasheets are no longer controlled by Aimtec; refer to www.aimtec.com for the most current product specifications. **2.** Product labels shown, including safety agency certifications on labels, may vary based on the date manufactured. **3.** Mechanical drawings and specifications are for reference only. **4**. All specifications are measured at an ambient temperature of 25°C, humidity<75%, nominal input voltage and at rated output load unless otherwise specified. **5.** Aimtec may not have conducted destructive testing or chemical analysis on all internal components and chemicals at the time of publishing this document. CAS numbers and other limited information are considered proprietary and may not be available for release. **6.** This product is not designed for use in critical life support systems, equipment used in hazardous environments, nuclear control systems or other such applications which necessitate specific safety and regulatory standards other the ones listed in this datasheet. **7.** Warranty is in accordance with Aimtec's standard Terms of Sale available at www.aimtec.com.