Click to ORDER samples

AM20EW-LPZ



2 x 1

The AM20EW-LPZ is a 20W DC/DC converter that offers a regulated output which contributes to a more stable and reliable output performance. It features a wide 4:1 input voltage range of 9-160VDC, which will benefit your new system design.

This series offers great operating temperatures, from -40°C to 85°C. Furthermore, an isolation of 1500VDC/2250VDC, continuous output short circuit protection (OSCP), over-current protection (OCP), over-voltage protection (OVP), and under voltage lock-out (UVLO) come standard with the series.

The AM20EW-LPZ is suitable for grid power, instrumentation, industrial controls, communication, and civil applications.

Features

- Operating Temp: -40 °C to +85 °C
- Isolation voltage: 1500VDC/2250VDC
- High efficiency: Up to 90% typ.
- Regulated single output
- Output short circuit, over-current, over-voltage
- Standard 2 x1 package

RoHS

3yr Warranty

Summary

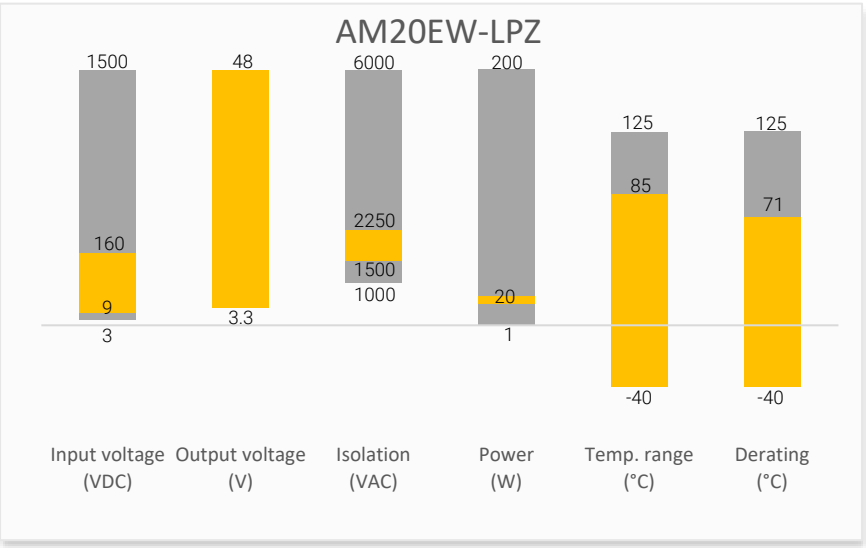

Training

Product Training Video (click to open)

Press Release

Application Notes

Coming Soon!

Applications

Power Grid

Industrial

Telecom

Instrumentation

Models & Specifications

Single Output							
Model	Input Voltage (VDC)	Output Voltage (VDC)	Nominal Vin Input Current Max (mA)		Output Current Max (mA)	Maximum capacitive load (µF)	Efficiency Full Load Typ (%)
			No Load	Full Load			
AM20EW-2403SLPZ	24 (9-36)	3.3	40	799	5000	10000	86
AM20EW-2405SLPZ	24 (9-36)	5	40	969	4000	10000	88
AM20EW-2409SLPZ	24 (9-36)	9	40	947	2222	4700	89
AM20EW-2412SLPZ	24 (9-36)	12	40	947	1667	1600	89
AM20EW-2415SLPZ	24 (9-36)	15	40	947	1333	1000	90
AM20EW-2424SLPZ	24 (9-36)	24	40	947	834	500	90
AM20EW-4803SLPZ	48 (18-75)	3.3	20	400	5000	10000	86
AM20EW-4805SLPZ	48 (18-75)	5	20	485	4000	10000	86
AM20EW-4809SLPZ	48 (18-75)	9	20	474	2222	4700	89
AM20EW-4812SLPZ	48 (18-75)	12	20	474	1667	1600	87
AM20EW-4815SLPZ	48 (18-75)	15	20	474	1333	1000	90
AM20EW-4824SLPZ	48 (18-75)	24	20	474	834	500	88
AM20EW-11003SH22LPZ	110 (40-160)	3.3	10	183	5000	10000	82
AM20EW-11005SH22LPZ	110 (40-160)	5	3	214	4000	10000	85
AM20EW-11012SH22LPZ	110 (40-160)	12	3	214	1667	2700	86
AM20EW-11015SH22LPZ	110 (40-160)	15	3	214	1333	1680	86
AM20EW-11024SH22LPZ	110 (40-160)	24	3	214	833	680	87
AM20EW-11048SH22LPZ	110 (40-160)	48	3	214	417	470	88

Dual Output							
Model	Input Voltage (VDC)	Output Voltage (VDC)	Nominal Vin Input Current Max (mA)		Output Current Max (mA)	Maximum capacitive load (µF)	Efficiency Full Load Typ (%)
			No Load	Full Load			
AM20EW-2405DLPZ	24 (9-36)	±5	40	969	±2000	4800	86
AM20EW-2409DLPZ	24 (9-36)	±9	40	947	±1111	1000	88
AM20EW-2412DLPZ	24 (9-36)	±12	40	947	±834	800	88
AM20EW-2415DLPZ	24 (9-36)	±15	40	947	±667	625	88
AM20EW-4805DLPZ	48 (18-75)	±5	20	485	±2000	4800	86
AM20EW-4812DLPZ	48 (18-75)	±12	20	474	±834	800	88
AM20EW-4815DLPZ	48 (18-75)	±15	20	474	±667	625	89

Input Specification				
Parameters	Conditions	Typical	Maximum	Units
Voltage types			4:1	
Absolute maximum rating	24Vin, 1sec. max.		-0.7~50	VDC
	48Vin, 1sec. max.		-0.7~100	VDC
	110Vin, 1sec. max.		-0.7~180	VDC
Input reflected ripple current	Nominal Vin and full load, 24/48Vin models	30		mA
	Nominal Vin and full load, 110Vin models	25		mA
Start-up time	Nominal Vin and constant resistive load	10		mS

Start-up voltage	24V input		9	VDC
	48V input		18	VDC
	110V input		40	VDC
Input under voltage lockout	24V input	5.5-6.5		VDC
	48V input	12-15.5		VDC
	110V input	28-32		VDC
Filter	π(Pi) Network			
On/Off control	ON – open or 3.5-12VDC; OFF – short to –Vin or 0-1.2VDC, Idle current: 4 - 7mA (24/48Vin models), 2 – 7mA (110Vin models)			

Isolation Specification

Parameters	Conditions	Typical	Maximum	Units
Tested isolation voltage	Input / output, 60 sec, 1 mA, 24/48Vin models	≥1500		VDC
	Input / output, 60 sec, 1 mA, 110Vin models	≥2250		VDC
	Input to case / output to case, 60 sec, 1 mA, 110Vin models	≥1600		VDC
Resistance	Input / output, 500VDC	≥1000		MΩ
Capacitance	Input / output, 100KHz/0.1V, AM20EW-2424SLPZ	2050		pF
	Input / output, 100KHz/0.1V, other 24/48Vin models	1050		pF
	Input / output, 100KHz/0.1V, 110Vin models	2200		pF

Output Specification

Parameters	Conditions	Typical	Maximum	Units
Voltage Tolerance	100% load @ Vin (nom.)	±1	±3	%
Line Regulation	LL to HL at Full Load, 24/48Vin models, output 1	±0.2	±0.5	%
	LL to HL at Full Load, 24/48Vin models, output 2	±0.5	±1	%
	LL to HL at Full Load, 110Vin models	±0.4	±1	%
Load Regulation	5% to 100% load, output 1	±0.5	±1	%
	5% to 100% load, output 2	±0.5	±1.5	%
Cross Regulation	Dual, positive output 50% load, negative output 10% to 100% Load		±5	%
Transient Recovery Time	25% load step change	300	500	μs
Transient recovery deviation	25% load step change, 24/48Vin @ 3.3/5/±5Vout models	±5	±8	%
	25% load step change, 110Vin @ 3.3/5Vout models	±3	±8	%
	25% load step change, others	±3	±5	%
External Trim Adj. Range			±10	%
Ripple & Noise	20MHz Bandwidth, 100% load	50	100	mV pk-pk

General Specifications

Parameters	Conditions	Minimum	Typical	Maximum	Units
Switching frequency	100% load, 24/48Vin models		270		KHz
	100% load, 110Vin models		300		KHz
Short circuit protection	Continuous, Auto recovery				
Over current protection	24/48Vin models	110		190	% of Io
	110Vin models	120			% of Io
Over voltage protection		110		160	%
Operating temperature	See derating curve	-40		85	°C
Maximum soldering temperature	1.5mm from case for 10 sec			300	°C
Storage temperature		-55		125	°C
Temperature coefficient	100% Load			± 0.03	%/°C

Cooling	Free air convection				
Humidity			≥5	95	% RH
Weight	24/48Vin models		28		g
	110Vin models		41		g
Dimensions (L x W x H)	2.00x 1.00 x 0.47 inches (50.8 x 25.4 x 12.0 mm)				
Case material	Aluminum alloy				
Vibration	IEC/EN61373, category 1/grade B				
MTBF	≥ 1 000 000 hrs (MIL-HDBK -217F, t=+25°C)				

NOTE: All specifications in this datasheet are measured at an ambient temperature of 25°C, humidity<75%, nominal input voltage and at rated output load unless otherwise specified.

Safety Specifications

Parameters			
Standards	Designed to meet EN55016-2-1 (110Vin models)		
	Information technology Equipment		Designed to meet UL/EN/IEC 62368-1 (24/48Vin models) Designed to meet EN/IEC 62368-1 (110Vin models)
	Electronic equipment in railway application		Designed to meet EN50155 (110Vin models)
	EMI - Conducted and radiated emission	CE	CISPR32/EN 55032, Class B, with the recommended EMC circuit EN50121-3-2
		RE	CISPR32/EN55032, Class B with the recommended EMC circuit EN50121-3-2
	Electrostatic Discharge Immunity		EN61000-4-2 EN50121-3-2
	RF, Electromagnetic Field Immunity		EN61000-4-3 EN50121-3-2
	Electrical Fast Transient/Burst Immunity		EN61000-4-4 EN50121-3-2
	Surge Immunity		EN61000-4-5 EN50121-3-2
	RF, Electromagnetic Field Immunity		EN61000-4-6 EN50121-3-2

Derating

24/48Vin models

Temperature Derating Graph

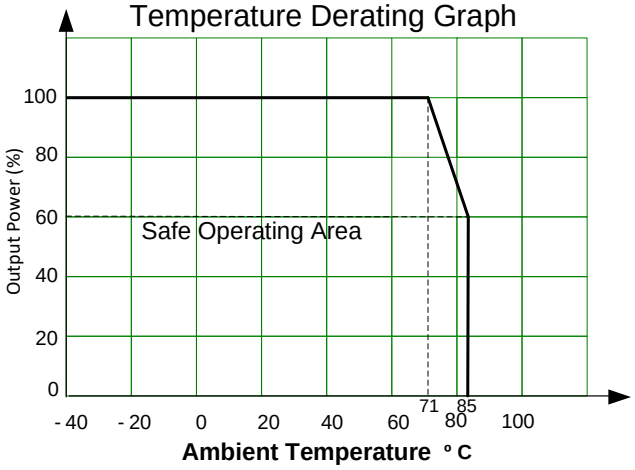

AM20EW-11003SH22LPZ

Temperature Derating Graph

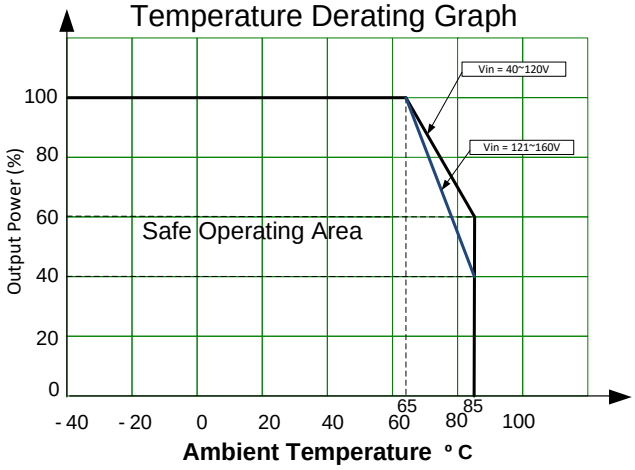

AM20EW-11005SH22LPZ

Temperature Derating Graph

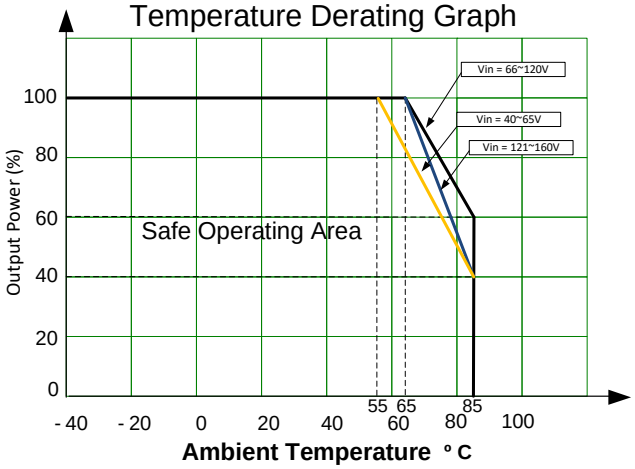

Other 110Vin models

Temperature Derating Graph

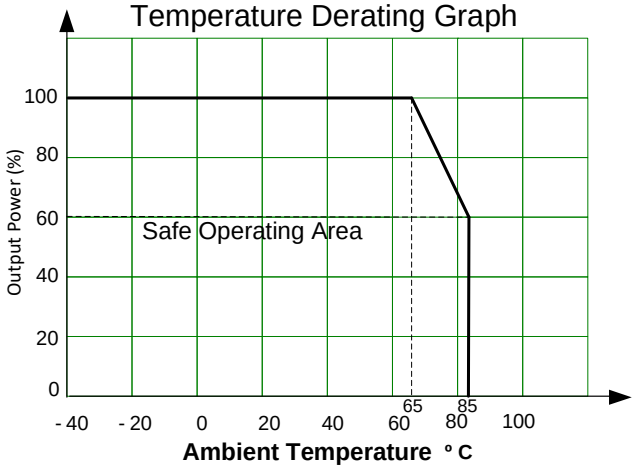

Typical Application Circuit

Single Output 24/48Vin models

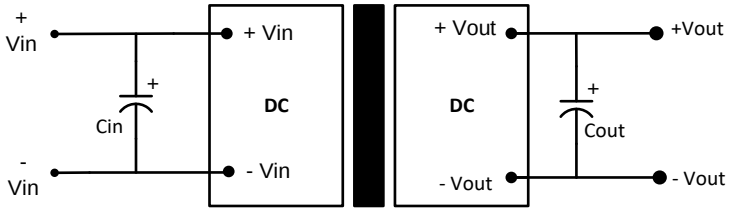

Single outputs			
Vin	Cin	Vout	Cout
24VDC	100µF/50V	3.3VDC	470µF,16V
48VDC	100µF/100V	5VDC	470µF,16V
		9VDC	220µF,25V
		12VDC	220µF,25V
		15VDC	220µF,25V
		24VDC	100µF,50V

Single Output 110Vin models

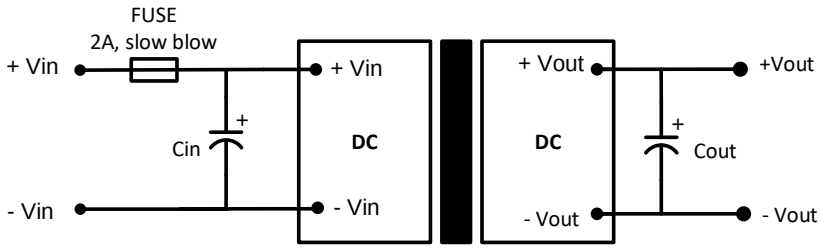

Single outputs			
Vin	Cin	Vout	Cout
110VDC	10~47μF	3.3VDC	470μF
		5VDC	470μF
		12VDC	220μF
		15VDC	220μF
		24VDC	100μF
		48VDC	100μF

Dual Output 24/48Vin models

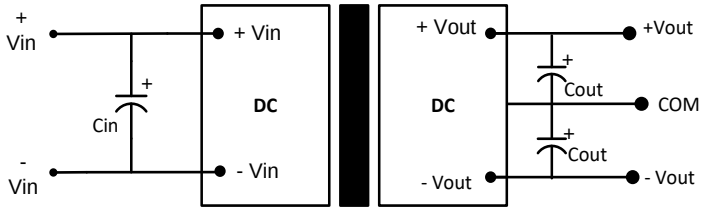

Dual outputs			
Vin	Cin	Vout	Cout
24VDC	100μF/50V	±5VDC	220μF,16V
48VDC	100μF/100V	±9VDC	100μF,25V
		±12VDC	100μF,25V
		±15VDC	100μF,25V

Recommended EMC Circuit

24/48Vin models

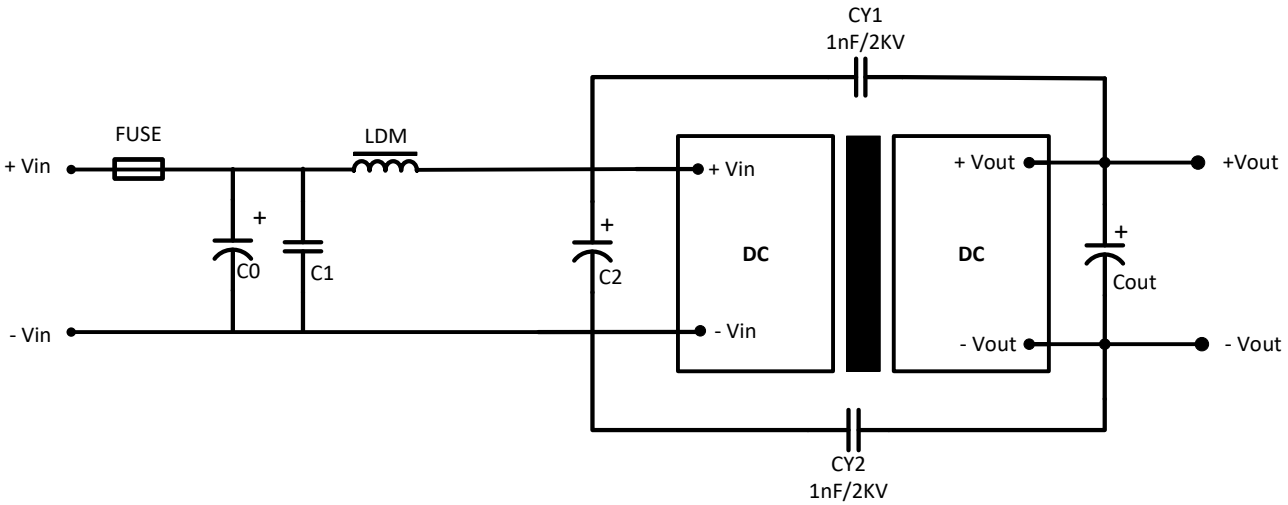

Component	24Vin	48Vin
C0, C2	330μF, 50V	330μF, 100V
C1	1μF, 50V	1μF, 100V
Cout	Refer to Cout in Typical Application Circuit	
LDM	4.7μH	3.3μH

110Vin models

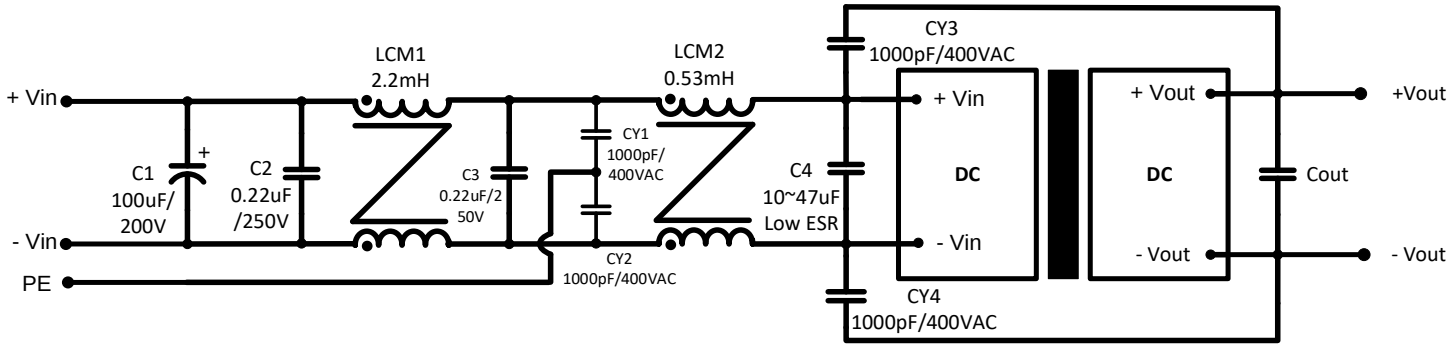

Component	110Vin
Cout	Refer to Cout in Typical Application Circuit

Trimming

Output voltage can be externally trimmed by utilizing the methods as shown below

Fixed Resistor **Variable Potentiometer**

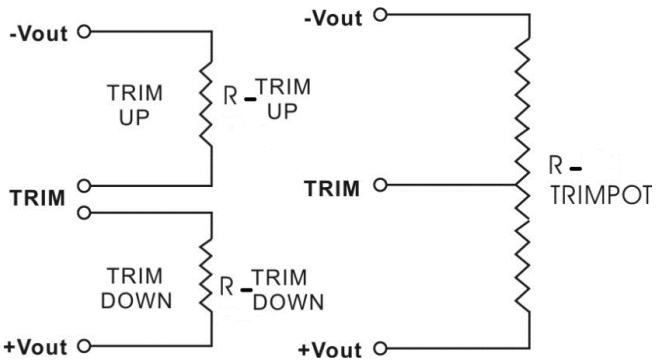

Leave open if not used.

3.3V Output 24/48Vin

Trim down %	1	2	3	4	5	6	7	8	9	10
Vout (VDC)	3.267	3.234	3.201	3.168	3.135	3.102	3.069	3.036	3.003	2.970
Rt down (KΩ)	119.157	76.942	54.687	40.942	31.609	24.859	19.748	15.745	12.525	9.878
Trim up %	1	2	3	4	5	6	7	8	9	10
Vout (VDC)	3.333	3.366	3.399	3.432	3.465	3.498	3.531	3.564	3.597	3.630
Rt up (KΩ)	-802.671	223.749	90.326	53.240	35.829	25.718	19.111	14.457	11.000	8.332

AM20EW-11003SH22LPZ

Trim down %	1	2	3	4	5	6	7	8	9	10
Vout (VDC)	3.267	3.234	3.201	3.168	3.135	3.102	3.069	3.036	3.003	2.970
Rt down (KΩ)	195.744	109.218	73.096	53.270	40.741	32.108	25.797	20.983	17.190	14.124
Trim up %	1	2	3	4	5	6	7	8	9	10
Vout (VDC)	3.333	3.366	3.399	3.432	3.465	3.498	3.531	3.564	3.597	3.630
Rt up (KΩ)	308.349	105.149	60.286	40.580	29.504	22.407	17.472	13.842	11.058	8.857

5V Output 24/48Vin

Trim down %	1	2	3	4	5	6	7	8	9	10
Vout (VDC)	4.950	4.900	4.850	4.800	4.750	4.700	4.680	4.600	4.550	4.500
Rt down (KΩ)	110.182	53.582	32.644	21.738	15.047	10.524	9.100	4.798	2.871	1.323
Trim up %	1	2	3	4	5	6	7	8	9	10
Vout (VDC)	5.060	5.100	5.150	5.200	5.250	5.300	5.350	5.400	5.450	5.500
Rt up (KΩ)	130.380	68.870	40.959	27.639	19.840	14.718	11.096	8.401	6.316	4.655

AM20EW-11005SH22LPZ

Trim down %	1	2	3	4	5	6	7	8	9	10
Vout (VDC)	4.950	4.900	4.850	4.800	4.750	4.700	4.680	4.600	4.550	4.500
Rt down (KΩ)	105.181	52.154	31.997	21.378	14.823	10.373	8.969	4.719	2.811	1.277
Trim up %	1	2	3	4	5	6	7	8	9	10
Vout (VDC)	5.060	5.100	5.150	5.200	5.250	5.300	5.350	5.400	5.450	5.500
Rt up (KΩ)	138.071	71.279	41.974	28.200	20.198	14.967	11.281	8.544	6.430	4.749

9V Output 24/48Vin

Trim down %	1	2	3	4	5	6	7	8	9	10
Vout (VDC)	8.910	8.820	8.730	8.640	8.550	8.460	8.370	8.280	8.190	8.100
Rt down (KΩ)	375.533	207.430	139.157	102.145	78.924	62.997	51.393	42.562	35.617	30.011
Trim up %	1	2	3	4	5	6	7	8	9	10
Vout (VDC)	9.090	9.180	9.270	9.360	9.450	9.540	9.630	9.720	9.810	9.900
Rt up (KΩ)	314.532	112.639	64.148	42.357	29.975	21.990	16.412	12.297	9.134	6.629

12V Output 24/48Vin

Trim down %	1	2	3	4	5	6	7	8	9	10
Vout (VDC)	11.880	11.760	11.640	11.520	11.400	11.280	11.160	11.040	10.920	10.800
Rt down (KΩ)	496.092	301.452	212.527	161.585	128.573	105.442	88.332	75.164	64.716	56.223
Trim up %	1	2	3	4	5	6	7	8	9	10
Vout (VDC)	12.120	12.240	12.360	12.480	12.600	12.720	12.840	12.960	13.080	13.200
Rt up (KΩ)	706.435	158.920	83.879	54.075	38.077	28.095	21.274	16.317	12.552	9.595

AM20EW-11012SH22LPZ

Trim down %	1	2	3	4	5	6	7	8	9	10
Vout (VDC)	11.880	11.760	11.640	11.520	11.400	11.280	11.160	11.040	10.920	10.800
Rt down (KΩ)	496.092	301.452	212.527	161.585	128.573	105.442	88.332	75.164	64.716	56.223
Trim up %	1	2	3	4	5	6	7	8	9	10
Vout (VDC)	12.120	12.240	12.360	12.480	12.600	12.720	12.840	12.960	13.080	13.200
Rt up (KΩ)	706.435	158.920	83.879	54.075	38.077	28.095	21.274	16.317	12.552	9.595

15V Output 24/48Vin

Trim down %	1	2	3	4	5	6	7	8	9	10
Vout (VDC)	14.850	14.700	14.550	14.400	14.250	14.100	13.950	13.800	13.650	13.500
Rt down (KΩ)	259.486	206.711	170.213	143.469	123.029	106.899	93.847	83.067	74.014	66.304
Trim up %	1	2	3	4	5	6	7	8	9	10
Vout (VDC)	15.150	15.300	15.450	15.600	15.750	15.900	16.050	16.200	16.350	16.500
Rt up (KΩ)	--	--	--	468.181	149.393	84.045	55.873	40.178	30.174	23.241

AM20EW-11015SH22LPZ

Trim down %	1	2	3	4	5	6	7	8	9	10
Vout (VDC)	14.850	14.700	14.550	14.400	14.250	14.100	13.950	13.800	13.650	13.500
Rt down (KΩ)	974.008	517.390	346.387	256.863	201.789	164.487	137.551	117.187	101.251	88.440
Trim up %	1	2	3	4	5	6	7	8	9	10
Vout (VDC)	15.150	15.300	15.450	15.600	15.750	15.900	16.050	16.200	16.350	16.500
Rt up (KΩ)	283.713	117.996	70.541	48.045	34.918	26.315	20.242	15.725	12.235	9.456

24V Output 24/48Vin

Trim down %	1	2	3	4	5	6	7	8	9	10
Vout (VDC)	23.760	23.520	23.280	23.040	22.800	22.560	22.320	22.080	21.840	21.600
Rt down (KΩ)	1291.721	794.249	566.971	436.771	352.397	293.276	249.546	215.890	189.186	167.481
Trim up %	1	2	3	4	5	6	7	8	9	10
Vout (VDC)	24.240	24.480	24.720	24.960	25.200	25.440	25.680	25.920	26.160	26.400
Rt up (KΩ)	797.750	178.809	93.978	60.286	42.201	30.917	23.206	17.602	13.346	10.003

AM20EW-11024SH22LPZ

Trim down %	1	2	3	4	5	6	7	8	9	10
Vout (VDC)	23.760	23.520	23.280	23.040	22.800	22.560	22.320	22.080	21.840	21.600
Rt down (KΩ)	1286.200	792.123	565.867	436.104	351.954	292.963	249.315	215.714	189.047	167.370
Trim up %	1	2	3	4	5	6	7	8	9	10
Vout (VDC)	24.240	24.480	24.720	24.960	25.200	25.440	25.680	25.920	26.160	26.400
Rt up (KΩ)	816.889	179.914	94.338	60.464	42.307	30.988	23.257	17.640	13.376	10.027

AM20EW-11048SH22LPZ

Trim down %	1	2	3	4	5	6	7	8	9	10
Vout (VDC)	47.520	47.040	46.560	46.080	45.600	45.120	44.640	44.160	43.680	43.200
Rt down (KΩ)	2357.744	1592.776	1193.772	948.808	783.113	663.569	573.251	502.609	445.845	399.235
Trim up %	1	2	3	4	5	6	7	8	9	10
Vout (VDC)	48.480	48.960	49.440	49.920	50.400	50.880	51.360	51.840	52.320	52.800
Rt up (KΩ)	--	331.356	138.244	82.118	55.382	39.741	29.475	22.220	16.821	12.646

Dimensions

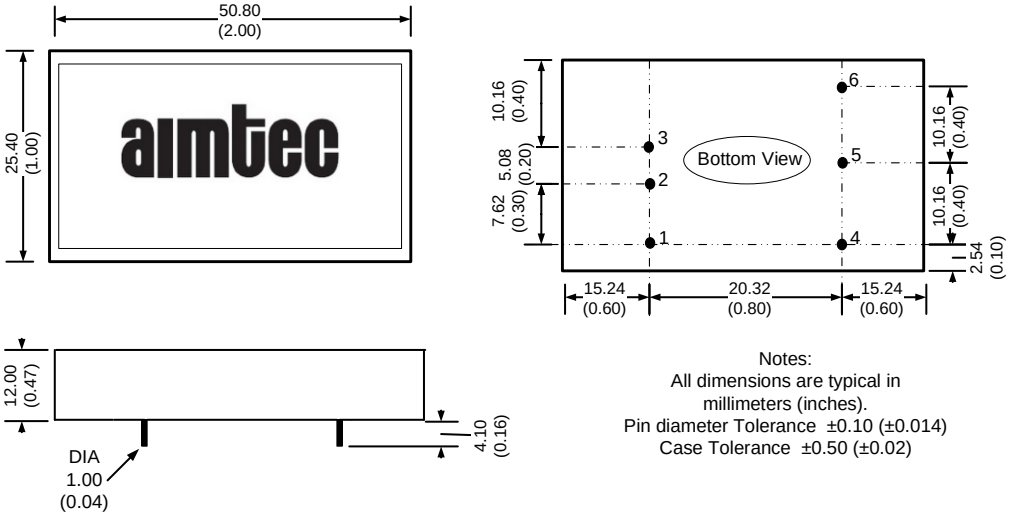

Notes:
All dimensions are typical in millimeters (inches).
Pin diameter Tolerance ±0.10 (±0.014)
Case Tolerance ±0.50 (±0.02)

Pin Out Specifications		
Pin	Single	Dual
1	On/off control	On/off control
2	-Vin	-Vin
3	+Vin	+Vin
4	-Vout	-Vout
5	Trim	Common
6	+Vout	+Vout

NOTE: 1. Datasheets are updated as needed and as such, specifications are subject to change without notice. Once printed or downloaded, datasheets are no longer controlled by Aimtec; refer to www.aimtec.com for the most current product specifications. **2.** Product labels shown, including safety agency certifications on labels, may vary based on the date manufactured. **3.** Mechanical drawings and specifications are for reference only. **4.** All specifications are measured at an ambient temperature of 25°C, humidity<75%, nominal input voltage and at rated output load unless otherwise specified. **5.** Aimtec may not have conducted destructive testing or chemical analysis on all internal components and chemicals at the time of publishing this document. CAS numbers and other limited information are considered proprietary and may not be available for release. **6.** This product is not designed for use in critical life support systems, equipment used in hazardous environments, nuclear control systems or other such applications which necessitate specific safety and regulatory standards other the ones listed in this datasheet. **7.** Warranty is in accordance with Aimtec's standard Terms of Sale available at www.aimtec.com.