AM2DM-JZ

Click to ORDER samples

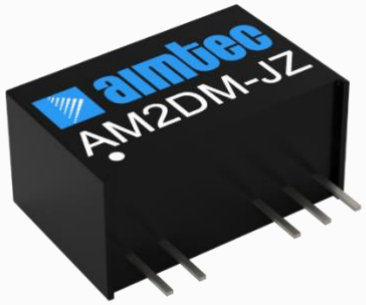

SIP7 Package

The AM2DM-JZ is a 2W SIP7 DC/DC converter that offers great cost savings thanks to an improved manufacturing process. It also features excellent reliability and performance while offering a standard input voltage range of 12-24VDC as well as an output voltage of -15-24V. This compact SIP7 design will surely benefit your new system design.

This new series offers great operating temperatures, from -40 to 105°C with full power up to 85°C. Also, an isolation of 5000VAC or 6000VDC for improved reliability and system safety as well as a great 19,360,000h MTBF come standard.

The AM2DM-JZ is suitable for many applications such as medical collection isolation, high voltage collection circuits, and IGBT drive circuits.

Features

- High I/O Isolation of 5000VAC or 6000VDC
- Continuous Short circuit protection
- Operating Temp: -40 °C to +105 °C
- Industry standard SIP7 pin-out
- Efficiency up to 84%
- Unregulated output
- Leakage current < 2µA
- Meets EN60601-1, ANSI/AAMI ES60601-1 standard (1xMOPP & 2xMOOP)
- Meets IEC62368 standard

RoHS

3yr Warranty

c UL us

Summary

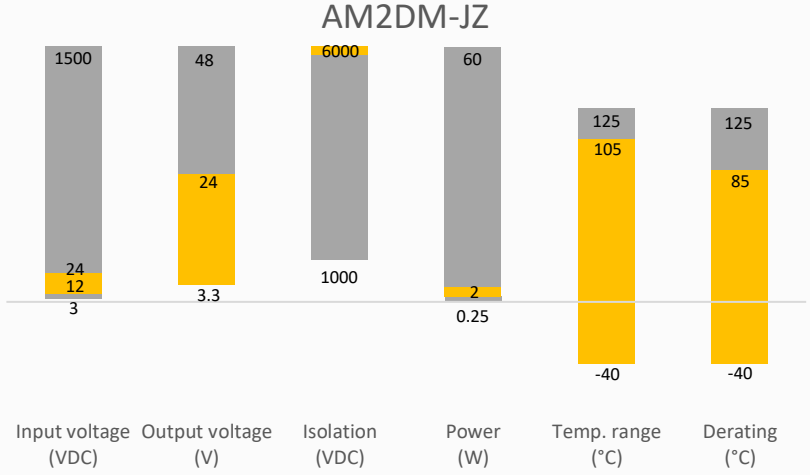

Training

Product Training Video (click to open)

Press Release

Coming Soon!

Application Notes

Applications

Industrial

Portable Equipment

Medical

IoT

Models & Specifications

Single Output

Model	Input Voltage (VDC)	Output Voltage (VDC)	Input Current Full | No load typ. (mA)	Output Current max | min (mA)*	Isolation (VDC)	Maximum capacitive Load (µF)	Efficiency Typ. (%)
AM2DM-1205SH60JZ	12 (10.8-13.2)	5	210 / 15	400 / 40	6000	1000	80
AM2DM-1209SH60JZ	12 (10.8-13.2)	9	210 / 15	222 / 22	6000	680	82
AM2DM-1212SH60JZ	12 (10.8-13.2)	12	210 / 15	167 / 17	6000	470	84
AM2DM-1215SH60JZ	12 (10.8-13.2)	15	210 / 15	133 / 14	6000	470	84
AM2DM-1505SH60JZ	15 (13.5-16.5)	5	167/15	400/40	6000	1000	80
AM2DM-1515SH60JZ	15 (13.5-16.5)	15	167/15	133/14	6000	470	83
AM2DM-2405SH60JZ	24 (21.6-26.4)	5	106 / 15	400 / 40	6000	2200	79
AM2DM-2409SH60JZ	24 (21.6-26.4)	9	106 / 15	222 / 22	6000	680	81
AM2DM-2412SH60JZ	24 (21.6-26.4)	12	106 / 15	167 / 17	6000	470	82
AM2DM-2415SH60JZ	24 (21.6-26.4)	15	106 / 15	133 / 14	6000	470	84
AM2DM-2424SH60JZ	24 (21.6-26.4)	24	106 / 15	83 / 9	6000	220	84

* Performance will be degraded if the load is not within the output current range.

Dual Output

Model	Input Voltage (VDC)	Output Voltage (VDC)	Input Current Full | No load typ. (mA)	Output Current max | min (mA)*	Isolation (VDC)	Maximum capacitive Load (µF)	Efficiency Typ. (%)
AM2DM-1205DH60JZ	12 (10.8-13.2)	±5	210 / 15	±200 / ±20	6000	1000	80
AM2DM-1209DH60JZ	12 (10.8-13.2)	±9	210 / 15	±111 / ±11	6000	470	82
AM2DM-1212DH60JZ	12 (10.8-13.2)	±12	210 / 15	±83 / ±9	6000	220	83
AM2DM-1215DH60JZ	12 (10.8-13.2)	±15	210 / 15	±67 / ±7	6000	220	84
AM2DM-1505DH60JZ	15 (13.5-16.5)	±5	167 / 15	±200 / ±20	6000	1000	78
AM2DM-1509DH60JZ	15 (13.5-16.5)	±9	167 / 15	±111 / ±11	6000	470	80
AM2DM-1515DH60JZ	15 (13.5-16.5)	±15	167 / 15	±67 / ±7	6000	220	80
AM2DM-2405DH60JZ	24 (21.6-26.4)	±5	106 / 15	±200 / ±20	6000	1000	79
AM2DM-2409DH60JZ	24 (21.6-26.4)	±9	106 / 15	±111 / ±11	6000	470	81
AM2DM-2412DH60JZ	24 (21.6-26.4)	±12	106 / 15	±83 / ±9	6000	220	82
AM2DM-2415DH60JZ	24 (21.6-26.4)	±15	106 / 15	±67 / ±7	6000	220	81

* Performance will be degraded if the load is not within the output current range.

Input Specification

Parameters	Conditions	Typical	Maximum	Units
Filter	Capacitor			
Absolute maximum rating	Maximum duration 1s, 12Vin	> -0.7	18	VDC
	Maximum duration 1s, 15Vin	> -0.7	21	VDC
	Maximum duration 1s, 24Vin	> -0.7	30	VDC
Input reflected ripple current		200		mA
Hot Plug		Unavailable		

Isolation Specification

Parameters	Conditions	Typical	Maximum	Units
Tested I/O voltage	60 sec, leakage ≤ 1mA	5000		VAC
		6000		VDC
Patient leakage current	250VAC, 50/60Hz		2	μA
Resistance	500VDC	>1000		MΩ
Capacitance	100kHz/0.1V	4		pF

Output Specification

Parameters	Conditions	Typical	Maximum	Units
Voltage accuracy		See output voltage tolerance		
Line regulation	Per 1% Vin change		1.2	
Load regulation	10-100% load, 5V output models		20	%
	10-100% load, other output models		15	%
Ripple & Noise*	5V output models	100	150	mV p-p
	Other output models	80	120	mV p-p
Temperature coefficient	100% full load	±0.02		%/°C

* Ripple and Noise are measured at 20MHz bandwidth. Please refer to the application note for specific details.

General Specifications

Parameters	Conditions	Typical	Maximum	Units
Switching frequency	100% load, nominal input voltage	200		KHz
Short circuit protection	Continuous, Auto recovery			
Operating temperature	Derating when operating temperature ≥85°C	-40 to +105		°C
Storage temperature		-55 to +125		°C
Case temperature rise	Ta = 25°C	25		°C
Manual soldering temperature	1.5mm away from case, duration ≤ 10sec		300	°C
Cooling	Free air convection			
Humidity	Non-condensing	>5	95	% RH
Case material	Black plastic (flammability to UL 94V-0)			
Weight		4.0		g
Dimensions (L x W x H)	0.77 x 0.39 x 0.49 inches (19.50 x 9.80 x 12.50 mm)			
MTBF	19 360 000 hrs (MIL-HDBK -217F, t=+25°C) / Full Load			
Creepage & clearance distance	Minimum of 5 mm			

NOTE: All specifications in this datasheet are measured at an ambient temperature of 25°C, humidity<75%, nominal input voltage and at rated output load unless otherwise specified.

Safety Specifications

Parameters				
Agency Approvals	UL61010-1			
Standards	Information technology equipment	Design to meet IEC/EN62368-1		
	EMC - Conducted and radiated emission	CE	Others	CISPR32 / EN55032, class B with the recommended EMI circuit EN60601-1-2/CISPR 11 GROUP1 class B with the recommended EMI circuit
			AM2DM-15_DH60JZ, AM2DM-24_DH60JZ	CISPR32 / EN55032, class A with the recommended EMI circuit EN60601-1-2/CISPR 11 GROUP1 class A with the recommended EMI circuit
		RE	Others	CISPR32 / EN55032, class B with the recommended EMI circuit EN60601-1-2/CISPR 11 GROUP1 class B with the recommended EMI circuit

			AM2DM-15_DH60JZ, AM2DM-24_DH60JZ	CISPR32 / EN55032, class A with the recommended EMI circuit EN60601-1-2/CISPR 11 GROUP1 class A with the recommended EMI circuit
	Electrostatic Discharge Immunity	EN60601-1-2 (IEC 61000-4-2) Air ±15KV, Contact ±8KV, Criteria B		

Derating

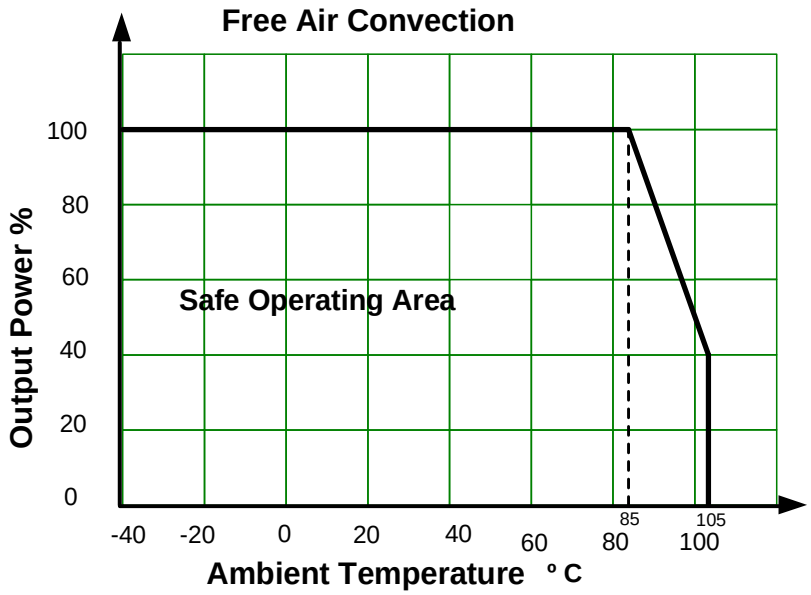

Output voltage tolerance

5VDC output models

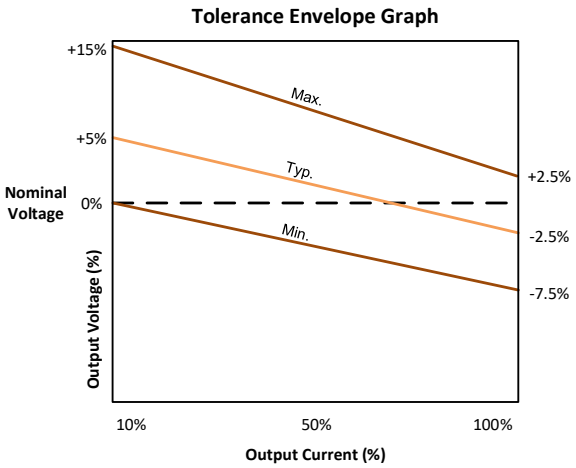

Other Voltage output models

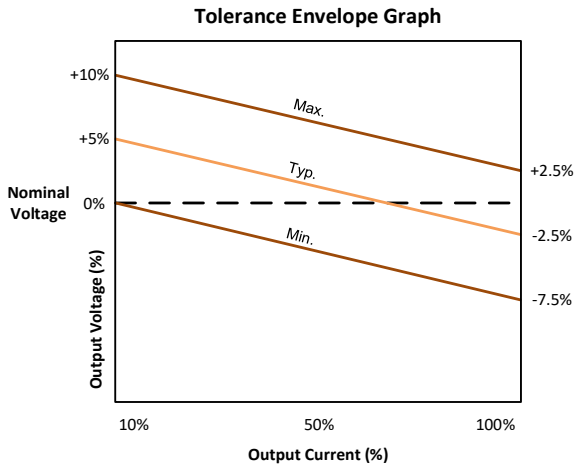

Typical application circuit

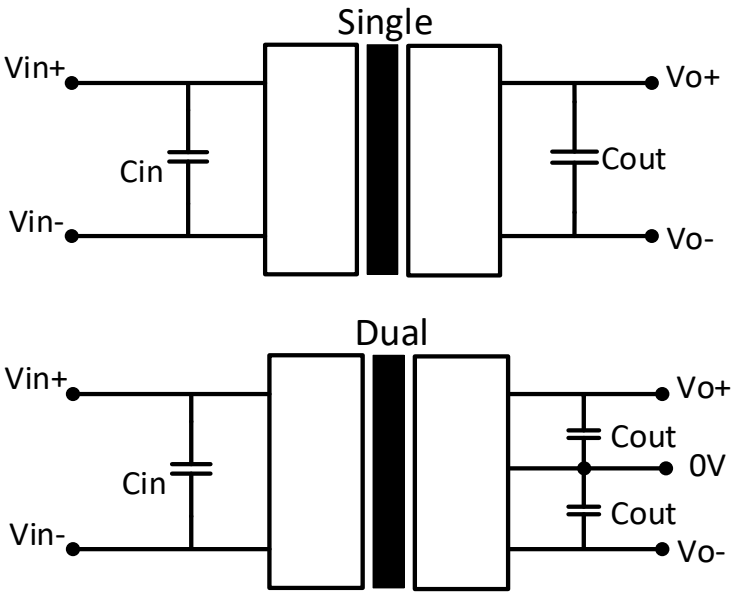

Vin	Cin
12VDC	10μF/25V
15VDC	4.7μF/25V
24VDC	2.2μF/50V

Vout	Cout
5VDC	10μF/16V
9VDC	10μF/16V
12VDC	2.2μF/25V
15VDC	1μF/25V
24VDC	0.47μF/50V

Dual Vout	Cout
±5/±9VDC	4.7μF/16V
±12/±15VDC	1μF/25V

Table 1

Recommended EMI circuit

AM2DM-15_DN60JZ, AM2DM-24_DN60JZ

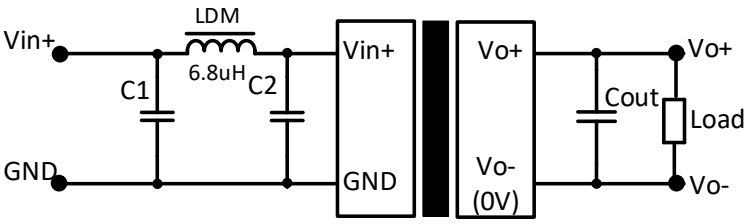

Input Voltage		AM2DM-15_DN60JZ, AM2DM-24_DN60JZ,
Emissions	C1/C2	4.7μF/25V
	Cout	Reference Cout in Table 1
	LDM	22μH

12V/15V/24V input

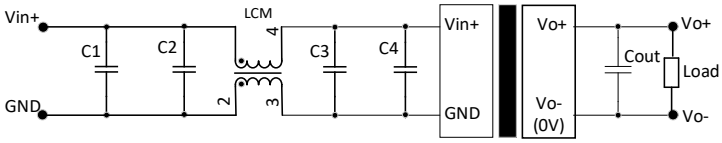

Input Voltage			24 VDC
Emissions	C1/C2		4.7μF/50V
	C3	AM2DM-2424SH60JZ	100μF/50V
		Other output	4.7μF/50V
	C4	AM2DM-2424SH60JZ	--
		Other output	4.7μF/50V
	Cout		Reference Cout in Table 1
	LCM		22μH (Nickel zinc inductance)

Dimensions

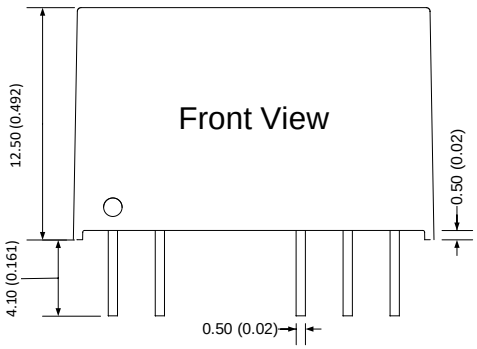

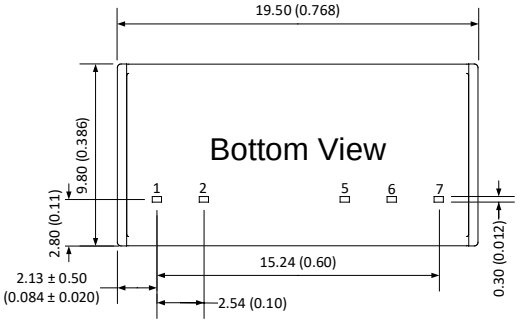

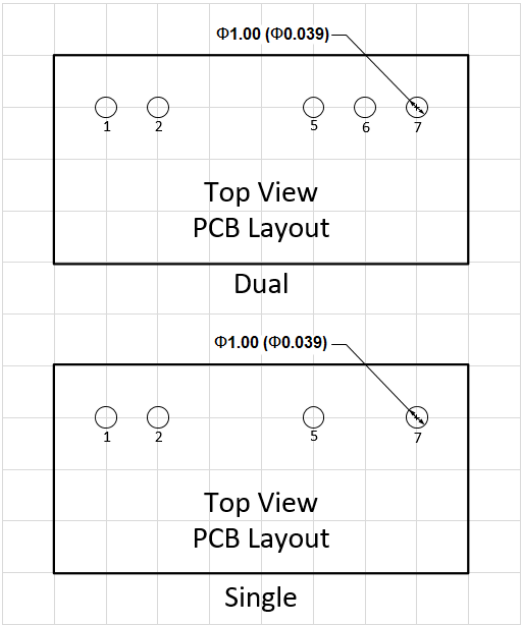

Pin Out Specifications		
Pin	Single output	Dual output
1	+V Input	+V Input
2	-V Input	-V Input
5	-V Output	-V Output
6	No Pin	Common
7	+V Output	+V Output

Note:
Grid 2.54 x 2.54mm
Unit: mm(inch)
Pin section tolerances: ±0.10(±0.004)
General tolerances: ±0.50(±0.020)

NOTE: 1. Datasheets are updated as needed and as such, specifications are subject to change without notice. Once printed or downloaded, datasheets are no longer controlled by Aimtec; refer to www.aimtec.com for the most current product specifications. **2.** Product labels shown, including safety agency certifications on labels, may vary based on the date manufactured. **3.** Mechanical drawings and specifications are for reference only. **4.** All specifications are measured at an ambient temperature of 25°C, humidity<75%, nominal input voltage and at rated output load unless otherwise specified. **5.** Aimtec may not have conducted destructive testing or chemical analysis on all internal components and chemicals at the time of publishing this document. CAS numbers and other limited information are considered proprietary and may not be available for release. **6.** This product is not designed for use in critical life support systems, equipment used in hazardous environments, nuclear control systems or other such applications which necessitate specific safety and regulatory standards other the ones listed in this datasheet. **7.** Warranty is in accordance with Aimtec's standard Terms of Sale available at www.aimtec.com.