Click to ORDER samples

AM2DS-EZ

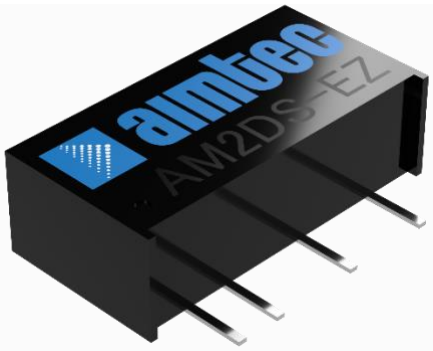

SIP7 Package

The AM2DS-EZ is a 2W SIP7 DC/DC converter that offers great cost savings thanks to an improved manufacturing process. It also features excellent reliability and performance while offering a standard input voltage range of 5-24VDC as well as an output voltage of -24 to 24V. This compact SIP7 design will surely benefit your new system design.

This new series offers great operating temperatures, from -40 to 105°C with full power up to 85°C. Also, an isolation of 1500VDC or 3000VDC for improved reliability and system safety as well as a great 3,500,000h MTBF come standard.

The AM2DS-EZ is suitable for many applications such as industrial systems, portable equipment, and internet of things.

Features

- Continuous Short circuit protection
- Operating Temp: -40 °C to +105 °C
- Industry standard SIP7 pin-out
- Efficiency up to 89%
- Unregulated output
- Designed to Meet IEC62368, UL62368, EN62368
- Made in Taiwan

RoHS

3yr Warranty

Summary

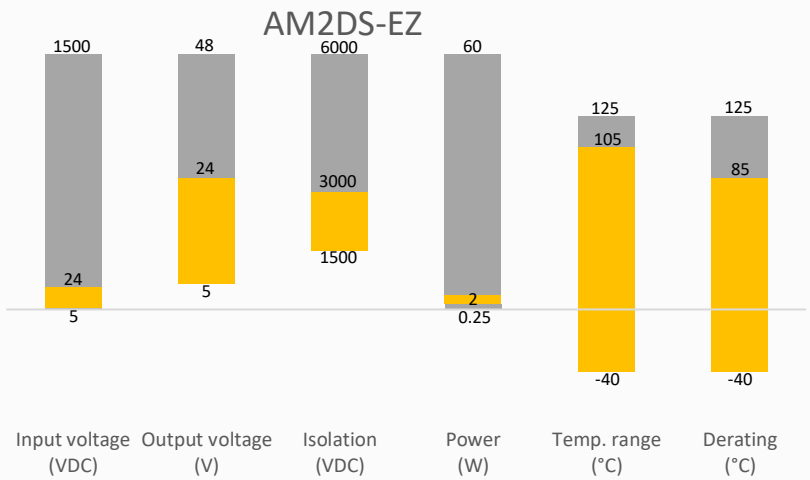

Training

Product Training Video (click to open)

Press Release

Coming Soon!

Application Notes

Applications

Industrial

Portable Equipment

IoT

Models & Specifications

Single Output						
Model	Input Voltage (VDC)	Output Voltage (VDC)	Output Current max (mA)*	Isolation (VAC/VDC)	Maximum capacitive Load (µF)	Efficiency Typ. (%)
AM2DS-0505SEZ	5 (4.5-5.5)	5	400	1500	2400	85
AM2DS-0509SEZ	5 (4.5-5.5)	9	223	1500	820	87
AM2DS-0512SEZ	5 (4.5-5.5)	12	167	1500	470	87
AM2DS-0515SEZ	5 (4.5-5.5)	15	133	1500	220	88
AM2DS-0524SEZ	5 (4.5-5.5)	24	84	1500	100	89
AM2DS-1205SEZ	12 (10.8-13.2)	5	400	1500	2400	85
AM2DS-1209SEZ	12 (10.8-13.2)	9	223	1500	820	87
AM2DS-1212SEZ	12 (10.8-13.2)	12	167	1500	470	87
AM2DS-1215SEZ	12 (10.8-13.2)	15	133	1500	220	88
AM2DS-1224SEZ	12 (10.8-13.2)	24	84	1500	100	89
AM2DS-1505SEZ	15 (13.5-16.5)	5	400	1500	2400	85
AM2DS-1509SEZ	15 (13.5-16.5)	9	223	1500	820	87
AM2DS-1512SEZ	15 (13.5-16.5)	12	167	1500	470	87
AM2DS-1515SEZ	15 (13.5-16.5)	15	133	1500	220	88
AM2DS-1524SEZ	15 (13.5-16.5)	24	84	1500	100	89
AM2DS-2405SEZ	24 (21.6-26.4)	5	400	1500	2400	85
AM2DS-2409SEZ	24 (21.6-26.4)	9	223	1500	820	87
AM2DS-2412SEZ	24 (21.6-26.4)	12	167	1500	470	87
AM2DS-2415SEZ	24 (21.6-26.4)	15	133	1500	220	88
AM2DS-2424SEZ	24 (21.6-26.4)	24	84	1500	100	89
AM2DS-0505SH30EZ	5 (4.5-5.5)	5	400	3000	2400	84
AM2DS-0509SH30EZ	5 (4.5-5.5)	9	223	3000	820	85
AM2DS-0512SH30EZ	5 (4.5-5.5)	12	167	3000	470	85
AM2DS-0515SH30EZ	5 (4.5-5.5)	15	133	3000	220	86
AM2DS-0524SH30EZ	5 (4.5-5.5)	24	84	3000	100	87
AM2DS-1205SH30EZ	12 (10.8-13.2)	5	400	3000	2400	85
AM2DS-1209SH30EZ	12 (10.8-13.2)	9	223	3000	820	87
AM2DS-1212SH30EZ	12 (10.8-13.2)	12	167	3000	470	87
AM2DS-1215SH30EZ	12 (10.8-13.2)	15	133	3000	220	88
AM2DS-1224SH30EZ	12 (10.8-13.2)	24	84	3000	100	89
AM2DS-1505SH30EZ	15 (13.5-16.5)	5	400	3000	2400	85
AM2DS-1509SH30EZ	15 (13.5-16.5)	9	223	3000	820	87
AM2DS-1512SH30EZ	15 (13.5-16.5)	12	167	3000	470	87
AM2DS-1515SH30EZ	15 (13.5-16.5)	15	133	3000	220	88
AM2DS-1524SH30EZ	15 (13.5-16.5)	24	84	3000	100	89
AM2DS-2405SH30EZ	24 (21.6-26.4)	5	400	3000	2400	85
AM2DS-2409SH30EZ	24 (21.6-26.4)	9	223	3000	820	87
AM2DS-2412SH30EZ	24 (21.6-26.4)	12	167	3000	470	87
AM2DS-2415SH30EZ	24 (21.6-26.4)	15	133	3000	220	88
AM2DS-2424SH30EZ	24 (21.6-26.4)	24	84	3000	100	89

Dual Output

Model	Input Voltage (VDC)	Output Voltage (VDC)	Output Current max (mA)*	Isolation (VDC)	Maximum capacitive Load (µF)	Efficiency Typ. (%)
AM2DS-0505DEZ	5 (4.5-5.5)	±5	±200	1500	±1200	82
AM2DS-0509DEZ	5 (4.5-5.5)	±9	±112	1500	±330	85
AM2DS-0512DEZ	5 (4.5-5.5)	±12	±84	1500	±330	87
AM2DS-0515DEZ	5 (4.5-5.5)	±15	±67	1500	±100	88
AM2DS-0524DEZ	5 (4.5-5.5)	±24	±42	1500	±47	89
AM2DS-1205DEZ	12 (10.8-13.2)	±5	±200	1500	±1200	82
AM2DS-1209DEZ	12 (10.8-13.2)	±9	±112	1500	±330	85
AM2DS-1212DEZ	12 (10.8-13.2)	±12	±84	1500	±330	87
AM2DS-1215DEZ	12 (10.8-13.2)	±15	±67	1500	±100	88
AM2DS-1224DEZ	12 (10.8-13.2)	±24	±42	1500	±47	89
AM2DS-1505DEZ	15 (13.5-16.5)	±5	±200	1500	±1200	82
AM2DS-1509DEZ	15 (13.5-16.5)	±9	±112	1500	±330	85
AM2DS-1512DEZ	15 (13.5-16.5)	±12	±84	1500	±330	87
AM2DS-1515DEZ	15 (13.5-16.5)	±15	±67	1500	±100	88
AM2DS-1524DEZ	15 (13.5-16.5)	±24	±42	1500	±47	89
AM2DS-2405DEZ	24 (21.6-26.4)	±5	±200	1500	±1200	82
AM2DS-2409DEZ	24 (21.6-26.4)	±9	±112	1500	±330	85
AM2DS-2412DEZ	24 (21.6-26.4)	±12	±84	1500	±330	87
AM2DS-2415DEZ	24 (21.6-26.4)	±15	±67	1500	±100	88
AM2DS-2424DEZ	24 (21.6-26.4)	±24	±42	1500	±47	89
AM2DS-0505DH30EZ	5 (4.5-5.5)	±5	±200	3000	±1200	82
AM2DS-0509DH30EZ	5 (4.5-5.5)	±9	±112	3000	±330	85
AM2DS-0512DH30EZ	5 (4.5-5.5)	±12	±84	3000	±330	85
AM2DS-0515DH30EZ	5 (4.5-5.5)	±15	±67	3000	±220	87
AM2DS-0524DH30EZ	5 (4.5-5.5)	±24	±42	3000	±47	88
AM2DS-1205DH30EZ	12 (10.8-13.2)	±5	±200	3000	±1200	82
AM2DS-1209DH30EZ	12 (10.8-13.2)	±9	±112	3000	±330	85
AM2DS-1212DH30EZ	12 (10.8-13.2)	±12	±84	3000	±330	87
AM2DS-1215DH30EZ	12 (10.8-13.2)	±15	±67	3000	±100	88
AM2DS-1224DH30EZ	12 (10.8-13.2)	±24	±42	3000	±47	89
AM2DS-1505DH30EZ	15 (13.5-16.5)	±5	±200	3000	±1200	82
AM2DS-1509DH30EZ	15 (13.5-16.5)	±9	±112	3000	±330	85
AM2DS-1512DH30EZ	15 (13.5-16.5)	±12	±84	3000	±330	87
AM2DS-1515DH30EZ	15 (13.5-16.5)	±15	±67	3000	±100	88
AM2DS-1524DH30EZ	15 (13.5-16.5)	±24	±42	3000	±47	89
AM2DS-2405DH30EZ	24 (21.6-26.4)	±5	±200	3000	±1200	82
AM2DS-2409DH30EZ	24 (21.6-26.4)	±9	±112	3000	±330	85
AM2DS-2412DH30EZ	24 (21.6-26.4)	±12	±84	3000	±330	87
AM2DS-2415DH30EZ	24 (21.6-26.4)	±15	±67	3000	±100	88
AM2DS-2424DH30EZ	24 (21.6-26.4)	±24	±42	3000	±47	89

Input Specification

Parameters	Conditions	Typical	Maximum	Units
Filter	Capacitor			
Voltage Tolerance	Vo, Io Nom	±10		%

Isolation Specification

Parameters	Conditions	Typical	Maximum	Units
Tested I/O voltage	60 sec, leakage ≤ 1mA, others	1500		VDC
	60 sec, leakage ≤ 1mA, H30 models	3000		VDC
Resistance	500VDC	>1000		MΩ
Capacitance	100kHz/0.1V	20		pF

Output Specification

Parameters	Conditions	Typical	Maximum	Units
Voltage Tolerance	100% Full Load		±5	%
Line Regulation	Per 1% Vin change	1.2		%
Load regulation	5V (10% To 100% F.L)	8	15	%
	9V (10% To 100% F.L)	6	10	%
	12V (10% To 100% F.L)	5	10	%
	15V (10% To 100% F.L)	4	10	%
	24V (10% To 100% F.L)	3	10	%
Ripple & Noise*	All Models	75	150	mV p-p

* Ripple and Noise are measured at 20MHz bandwidth. Please refer to the application note for specific details.

General Specifications

Parameters	Conditions	Typical	Maximum	Units
Switching frequency	100% load, nominal input voltage, 5Vin 3000VAC	215		KHz
	100% load, nominal input voltage, others	250		KHz
Short circuit protection	Continuous			
Operating temperature		-40 to +105		°C
Storage temperature		-55 to +125		°C
Cooling	Free air convection			
Humidity	Non-condensing	>5	95	% RH
Case material	DAP			
Weight		2.1		g
Dimensions (L x W x H)	0.77 x 0.24 x 0.39 inches (19.50 x 6.00 x 10.00 mm)			
MTBF	3 500 000 hrs (MIL-HDBK -217F, t=+25°C) / Full Load			

NOTE: All specifications in this datasheet are measured at an ambient temperature of 25°C, humidity<75%, nominal input voltage and at rated output load unless otherwise specified.

Safety Specifications

Parameters		
Standards	EMI	CE CISPR32 / EN55032, class B with the recommended EMI circuit RE CISPR32 / EN55032, class B with the recommended EMI circuit
	Electrostatic Discharge Immunity	EN60601-1-2 (IEC 61000-4-2) Air ±8KV, Contact ±6kV perf. Criteria B

Derating

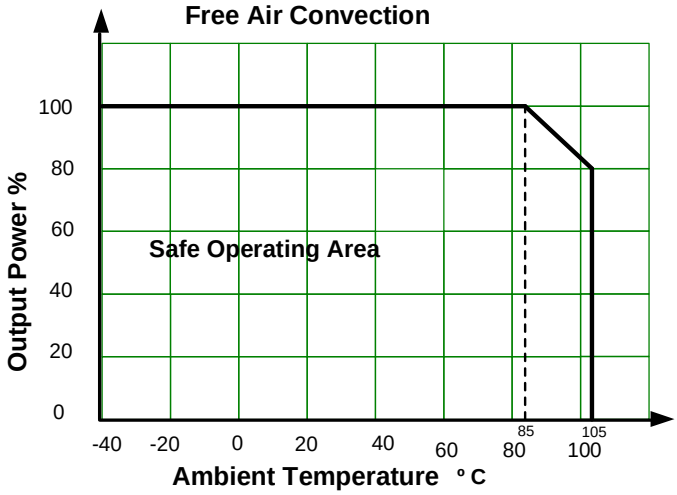

Typical application circuit

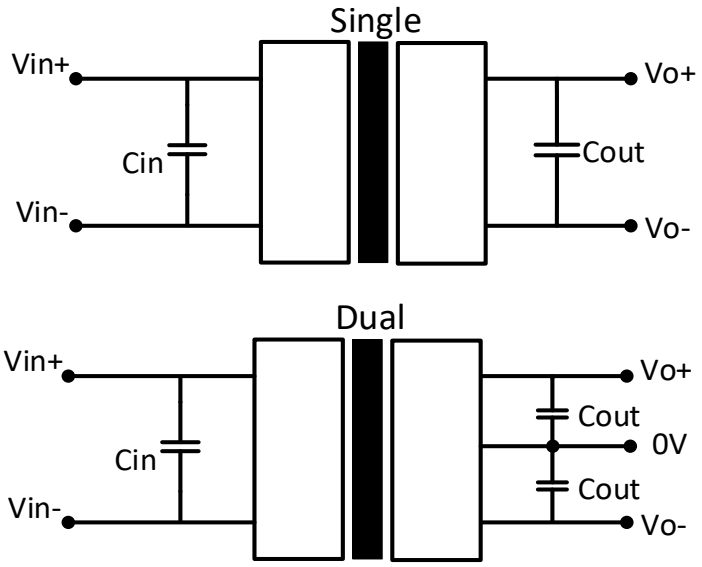

Vin	Cin
5VDC	4.7µF/25V
12VDC	2.2µF/25V
15VDC	2.2µF/25V
24VDC	1µF/50V

Single Vout	Cout
5VDC	10µF/16V
9VDC	2.2µF/16V
12VDC	2.2µF/25V
15VDC	1µF/25V
24VDC	1µF/50V

Dual Vout	Cout
±5VDC	±4.7µF/16V
±9VDC	±1µF/16V
±12VDC	±1µF /25V
±15VDC	±1µF /25V
±24VDC	±1µF /50V

Table 1

Recommended EMI circuit

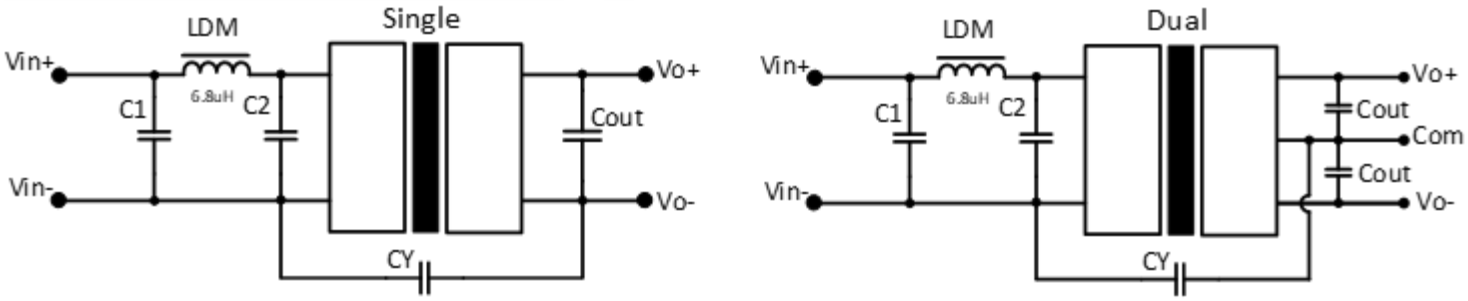

Vin	C1/C2	Vout	CY	LDM	Cout
5V/12V/15V/24V	4.7µF/50V	All output	1nF/4kVdc	6.8µH	Refer to Cout in typical circuit

Dimensions

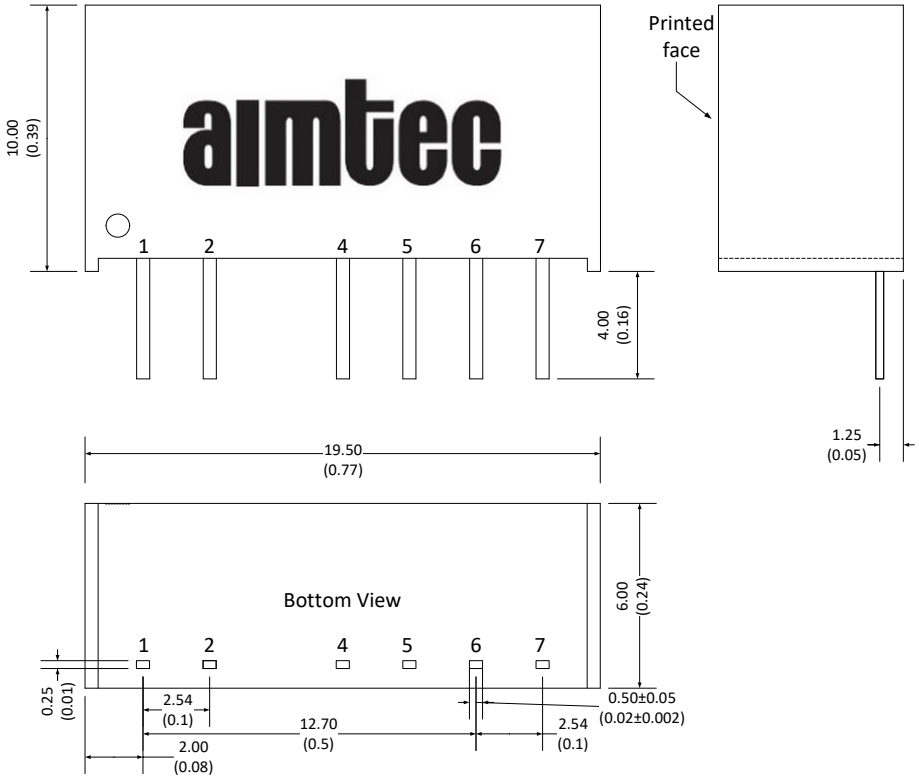

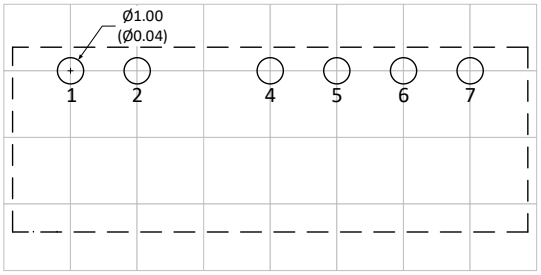

Grid size: 2.54*2.54mm

Note:
Unit: mm(inch)
General tolerance: ±0.25 (0.01)

Pin Out Specifications				
Pin	1.5KV isolation Single output	1.5KV isolation Dual output	3KV isolation Single output	3KV isolation Dual output
1	+V Input	+V Input	+V Input	+V Input
2	-V Input	-V Input	-V Input	-V Input
4	-V Output	-V Output	No pin	No pin
5	No pin	Com	-V Output	-V Output
6	+V Output	+V Output	No pin	Com
7	No pin	No pin	+V Output	+V Output

NOTE: 1. Datasheets are updated as needed and as such, specifications are subject to change without notice. Once printed or downloaded, datasheets are no longer controlled by Aimtec; refer to www.aimtec.com for the most current product specifications. **2.** Product labels shown, including safety agency certifications on labels, may vary based on the date manufactured. **3.** Mechanical drawings and specifications are for reference only. **4.** All specifications are measured at an ambient temperature of 25°C, humidity<75%, nominal input voltage and at rated output load unless otherwise specified. **5.** Aimtec may not have conducted destructive testing or chemical analysis on all internal components and chemicals at the time of publishing this document. CAS numbers and other limited information are considered proprietary and may not be available for release. **6.** This product is not designed for use in critical life support systems, equipment used in hazardous environments, nuclear control systems or other such applications which necessitate specific safety and regulatory standards other the ones listed in this datasheet. **7.** Warranty is in accordance with Aimtec's standard Terms of Sale available at www.aimtec.com.