Click to ORDER samples

AM2DS-LPZ

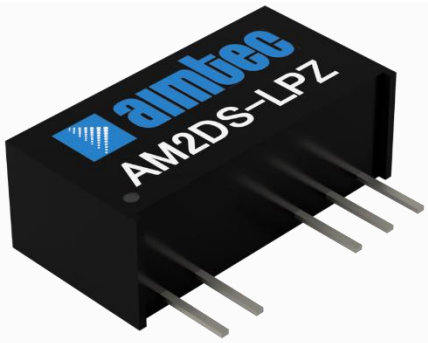

SIP7 Package

The AM2DS-LPZ is a 2W SIP7 DC/DC converter that offers great cost savings thanks to an improved manufacturing process. It also features excellent reliability and performance while offering a standard input voltage range of 3.3-24VDC as well as an output voltage of 3.3-24V. This compact SIP7 design will surely benefit your new system design.

This new series offers great operating temperatures, from -40 to 105°C with full power up to 85°C. Also, an isolation of 1500 or 3000VDC for improved reliability and system safety as well as a great 3,500,000h MTBF come standard.

The AM2DS-LPZ is suitable for instrumentation, industrial controls, industrial applications, communication and IoT applications.

Features

- High I/O Isolation of 1500/3000VDC
- Continuous Short circuit protection
- Operating Temp: -40 °C to +105 °C
- Industry standard SIP7 pin-out
- Efficiency up to 90%
- Unregulated output

RoHS

3yr Warranty

CE

Summary

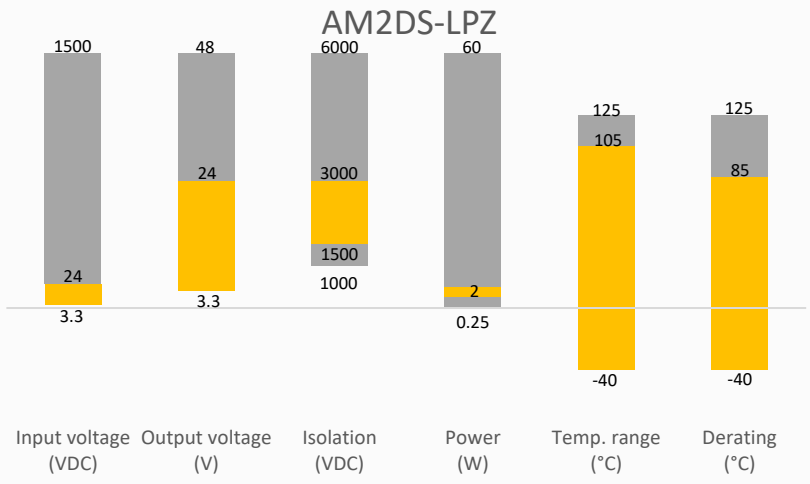

Training



Product Training Video (click to open)

Press Release

Coming Soon!

Application Notes

Applications

IoT

Industrial

Telecom

Portable Equipment

Models & Specifications

Single Output							
Model	Input Voltage (VDC)	Output Voltage (VDC)	Input Current Full | No load typ. (mA)	Output Current max | min (mA)*	Isolation (VDC)	Maximum capacitive Load (µF)	Efficiency Typ. (%)
AM2DS-0303SLPZ	3.3 (2.97-3.63)	3.3	768 / 4	400 / 40	1500	2400	77
AM2DS-0305SLPZ	3.3 (2.97-3.63)	5	768 / 4	400 / 40	1500	2400	79
AM2DS-0309SLPZ	3.3 (2.97-3.63)	9	768 / 4	222 / 22	1500	1000	80
AM2DS-0312SLPZ	3.3 (2.97-3.63)	12	768 / 4	167 / 17	1500	820	81
AM2DS-0503SLPZ	5 (4.5-5.5)	3.3	506 / 4	400 / 40	1500	2400	83
AM2DS-0505SLPZ	5 (4.5-5.5)	5	506 / 4	400 / 40	1500	2400	85
AM2DS-0509SLPZ	5 (4.5-5.5)	9	506 / 4	222 / 22	1500	1000	85
AM2DS-0512SLPZ	5 (4.5-5.5)	12	506 / 4	167 / 17	1500	820	86
AM2DS-0515SLPZ	5 (4.5-5.5)	15	506 / 4	133 / 13	1500	680	87
AM2DS-0524SLPZ	5 (4.5-5.5)	24	506 / 4	83 / 8	1500	560	88
AM2DS-1203SLPZ	12 (10.8-13.2)	3.3	208 / 4	400 / 40	1500	2400	84
AM2DS-1205SLPZ	12 (10.8-13.2)	5	208 / 4	400 / 40	1500	2400	85
AM2DS-1209SLPZ	12 (10.8-13.2)	9	208 / 4	222 / 22	1500	1000	86
AM2DS-1212SLPZ	12 (10.8-13.2)	12	208 / 4	167 / 17	1500	820	87
AM2DS-1215SLPZ	12 (10.8-13.2)	15	208 / 4	133 / 13	1500	680	88
AM2DS-1224SLPZ	12 (10.8-13.2)	24	208 / 4	83 / 8	1500	560	89
AM2DS-1503SLPZ	15 (13.5-16.5)	3.3	167 / 4	400 / 40	1500	2400	84
AM2DS-1505SLPZ	15 (13.5-16.5)	5	167 / 4	400 / 40	1500	2400	85
AM2DS-1509SLPZ	15 (13.5-16.5)	9	167 / 4	222 / 22	1500	1000	86
AM2DS-1512SLPZ	15 (13.5-16.5)	12	167 / 4	167 / 17	1500	820	87
AM2DS-1515SLPZ	15 (13.5-16.5)	15	167 / 4	133 / 13	1500	680	88
AM2DS-1524SLPZ	15 (13.5-16.5)	24	167 / 4	83 / 8	1500	560	89
AM2DS-2403SLPZ	24 (21.6-26.4)	3.3	104 / 4	400 / 40	1500	2400	84
AM2DS-2405SLPZ	24 (21.6-26.4)	5	104 / 4	400 / 40	1500	2400	86
AM2DS-2409SLPZ	24 (21.6-26.4)	9	104 / 4	222 / 22	1500	1000	87
AM2DS-2412SLPZ	24 (21.6-26.4)	12	104 / 4	167 / 17	1500	820	88
AM2DS-2415SLPZ	24 (21.6-26.4)	15	104 / 4	133 / 13	1500	680	89
AM2DS-2424SLPZ	24 (21.6-26.4)	24	104 / 4	83 / 8	1500	560	90
AM2DS-0303SH30LPZ	3.3 (2.97-3.63)	3.3	768 / 4	400 / 40	3000	2400	82
AM2DS-0305SH30LPZ	3.3 (2.97-3.63)	5	768 / 4	400 / 40	3000	2400	83
AM2DS-0309SH30LPZ	3.3 (2.97-3.63)	9	768 / 4	222 / 22	3000	1000	84
AM2DS-0312SH30LPZ	3.3 (2.97-3.63)	12	768 / 4	167 / 17	3000	820	85
AM2DS-0503SH30LPZ	5 (4.5-5.5)	3.3	506 / 4	400 / 40	3000	2400	83
AM2DS-0505SH30LPZ	5 (4.5-5.5)	5	506 / 4	400 / 40	3000	2400	85
AM2DS-0509SH30LPZ	5 (4.5-5.5)	9	506 / 4	222 / 22	3000	1000	85
AM2DS-0512SH30LPZ	5 (4.5-5.5)	12	506 / 4	167 / 17	3000	820	86
AM2DS-0515SH30LPZ	5 (4.5-5.5)	15	506 / 4	133 / 13	3000	680	87
AM2DS-0524SH30LPZ	5 (4.5-5.5)	24	506 / 4	83 / 8	3000	560	88
AM2DS-1203SH30LPZ	12 (10.8-13.2)	3.3	208 / 4	400 / 40	3000	2400	84
AM2DS-1205SH30LPZ	12 (10.8-13.2)	5	208 / 4	400 / 40	3000	2400	85
AM2DS-1209SH30LPZ	12 (10.8-13.2)	9	208 / 4	222 / 22	3000	1000	86
AM2DS-1212SH30LPZ	12 (10.8-13.2)	12	208 / 4	167 / 17	3000	820	87
AM2DS-1215SH30LPZ	12 (10.8-13.2)	15	208 / 4	133 / 13	3000	680	88

AM2DS-1224SH30LPZ	12 (10.8-13.2)	24	208 / 4	83 / 8	3000	560	89
AM2DS-1503SH30LPZ	15 (13.5-16.5)	3.3	167 / 4	400 / 40	3000	2400	84
AM2DS-1505SH30LPZ	15 (13.5-16.5)	5	167 / 4	400 / 40	3000	2400	85
AM2DS-1509SH30LPZ	15 (13.5-16.5)	9	167 / 4	222 / 22	3000	1000	86
AM2DS-1512SH30LPZ	15 (13.5-16.5)	12	167 / 4	167 / 17	3000	820	87
AM2DS-1515SH30LPZ	15 (13.5-16.5)	15	167 / 4	133 / 13	3000	680	88
AM2DS-1524SH30LPZ	15 (13.5-16.5)	24	167 / 4	83 / 8	3000	560	89
AM2DS-2403SH30LPZ	24 (21.6-26.4)	3.3	104 / 4	400 / 40	3000	2400	84
AM2DS-2405SH30LPZ	24 (21.6-26.4)	5	104 / 4	400 / 40	3000	2400	86
AM2DS-2409SH30LPZ	24 (21.6-26.4)	9	104 / 4	222 / 22	3000	1000	87
AM2DS-2412SH30LPZ	24 (21.6-26.4)	12	104 / 4	167 / 17	3000	820	88
AM2DS-2415SH30LPZ	24 (21.6-26.4)	15	104 / 4	133 / 13	3000	680	89
AM2DS-2424SH30LPZ	24 (21.6-26.4)	24	104 / 4	83 / 8	3000	560	90
* Performance will be degraded if the load is not within the output current range.							

Dual Output

Model	Input Voltage (VDC)	Output Voltage (VDC)	Input Current Full | No load typ. (mA)	Output Current max | min (mA)*	Isolation (VDC)	Maximum capacitive Load (µF)	Efficiency Typ. (%)
AM2DS-0503DLPZ	5 (4.5-5.5)	±3.3	506 / 4	±303 / ±30	1500	±1000	83
AM2DS-0505DLPZ	5 (4.5-5.5)	±5	506 / 4	±200 / ±20	1500	±1000	85
AM2DS-0509DLPZ	5 (4.5-5.5)	±9	506 / 4	±111 / ±11	1500	±560	85
AM2DS-0512DLPZ	5 (4.5-5.5)	±12	506 / 4	±83 / ±8	1500	±560	86
AM2DS-0515DLPZ	5 (4.5-5.5)	±15	506 / 4	±67/ ±7	1500	±220	87
AM2DS-0524DLPZ	5 (4.5-5.5)	±24	506 / 4	±42 / ±4	1500	±100	87
AM2DS-1203DLPZ	12 (10.8-13.2)	±3.3	208 / 4	±303 / ±30	1500	±1000	84
AM2DS-1205DLPZ	12 (10.8-13.2)	±5	208 / 4	±200 / ±20	1500	±1000	85
AM2DS-1209DLPZ	12 (10.8-13.2)	±9	208 / 4	±111 / ±11	1500	±560	86
AM2DS-1212DLPZ	12 (10.8-13.2)	±12	208 / 4	±83 / ±8	1500	±560	87
AM2DS-1215DLPZ	12 (10.8-13.2)	±15	208 / 4	±67/ ±7	1500	±220	88
AM2DS-1224DLPZ	12 (10.8-13.2)	±24	208 / 4	±42 / ±4	1500	±100	86
AM2DS-1505DLPZ	15 (13.5-16.5)	±5	167 / 4	±200 / ±20	1500	±1000	85
AM2DS-1509DLPZ	15 (13.5-16.5)	±9	167 / 4	±111 / ±11	1500	±560	86
AM2DS-1512DLPZ	15 (13.5-16.5)	±12	167 / 4	±83 / ±8	1500	±560	87
AM2DS-1515DLPZ	15 (13.5-16.5)	±15	167 / 4	±67/ ±7	1500	±220	88
AM2DS-2403DLPZ	24 (21.6-26.4)	±3.3	104 / 4	±303 / ±30	1500	±1000	84
AM2DS-2405DLPZ	24 (21.6-26.4)	±5	104 / 4	±200 / ±20	1500	±1000	86
AM2DS-2409DLPZ	24 (21.6-26.4)	±9	104 / 4	±111 / ±11	1500	±560	87
AM2DS-2412DLPZ	24 (21.6-26.4)	±12	104 / 4	±83 / ±8	1500	±560	88
AM2DS-2415DLPZ	24 (21.6-26.4)	±15	104 / 4	±67/ ±7	1500	±220	89
AM2DS-2424DLPZ	24 (21.6-26.4)	±24	104 / 4	±42 / ±4	1500	±100	86
AM2DS-0503DH30LPZ	5 (4.5-5.5)	±3.3	506 / 4	±303 / ±30	3000	±1000	83
AM2DS-0505DH30LPZ	5 (4.5-5.5)	±5	506 / 4	±200 / ±20	3000	±1000	85
AM2DS-0509DH30LPZ	5 (4.5-5.5)	±9	506 / 4	±111 / ±11	3000	±560	85
AM2DS-0512DH30LPZ	5 (4.5-5.5)	±12	506 / 4	±83 / ±8	3000	±560	86
AM2DS-0515DH30LPZ	5 (4.5-5.5)	±15	506 / 4	±67/ ±7	3000	±220	87
AM2DS-0524DH30LPZ	5 (4.5-5.5)	±24	506 / 4	±42 / ±4	3000	±100	87
AM2DS-1203DH30LPZ	12 (10.8-13.2)	±3.3	208 / 4	±303 / ±30	3000	±1000	84
AM2DS-1205DH30LPZ	12 (10.8-13.2)	±5	208 / 4	±200 / ±20	3000	±1000	85
AM2DS-1209DH30LPZ	12 (10.8-13.2)	±9	208 / 4	±111 / ±11	3000	±560	86

AM2DS-1212DH30LPZ	12 (10.8-13.2)	±12	208 / 4	±83 / ±8	3000	±560	87
AM2DS-1215DH30LPZ	12 (10.8-13.2)	±15	208 / 4	±67/ ±7	3000	±220	88
AM2DS-1224DH30LPZ	12 (10.8-13.2)	±24	208 / 4	±42 / ±4	3000	±100	86
AM2DS-1505DH30LPZ	15 (13.5-16.5)	±5	167 / 4	±200 / ±20	3000	±1000	85
AM2DS-1509DH30LPZ	15 (13.5-16.5)	±9	167 / 4	±111 / ±11	3000	±560	86
AM2DS-1512DH30LPZ	15 (13.5-16.5)	±12	167 / 4	±83 / ±8	3000	±560	87
AM2DS-1515DH30LPZ	15 (13.5-16.5)	±15	167 / 4	±67/ ±7	3000	±220	88
AM2DS-2403DH30LPZ	24 (21.6-26.4)	±3.3	104 / 4	±303 / ±30	3000	±1000	84
AM2DS-2405DH30LPZ	24 (21.6-26.4)	±5	104 / 4	±200 / ±20	3000	±1000	86
AM2DS-2409DH30LPZ	24 (21.6-26.4)	±9	104 / 4	±111 / ±11	3000	±560	87
AM2DS-2412DH30LPZ	24 (21.6-26.4)	±12	104 / 4	±83 / ±8	3000	±560	88
AM2DS-2415DH30LPZ	24 (21.6-26.4)	±15	104 / 4	±67/ ±7	3000	±220	89
AM2DS-2424DH30LPZ	24 (21.6-26.4)	±24	104 / 4	±42 / ±4	3000	±100	86

* Performance will be degraded if the load is not within the output current range.

Input Specification

Parameters	Conditions	Typical	Maximum	Units
Filter	Capacitor			
Absolute maximum rating	Maximum duration 1s, 3.3Vin	> -0.7	5	VDC
	Maximum duration 1s, 5Vin	> -0.7	9	VDC
	Maximum duration 1s, 12Vin	> -0.7	18	VDC
	Maximum duration 1s, 15Vin	> -0.7	21	VDC
	Maximum duration 1s, 24Vin	> -0.7	30	VDC
Input reflected ripple current		15		mA

Isolation Specification

Parameters	Conditions	Typical	Maximum	Units
Tested I/O voltage	60 sec, leakage ≤ 1mA	>1500		VDC
	60 sec, leakage ≤ 1mA for H30 models	>3000		VDC
Resistance	500VDC	>1000		MΩ
Capacitance	100kHz/0.1V	20		pF

Output Specification

Parameters	Conditions	Typical	Maximum	Units
Voltage accuracy	See output voltage tolerance	10	16	%
Line regulation	Per 1% Vin change, 3.3Vout models		1.5	%
	Per 1% Vin change, other models		1.2	%
Load regulation	10-100% load, 3.3Vout models	14		%
	10-100% load, 5Vout models	10		%
	10-100% load, 9Vout models	9		%
	10-100% load, 12Vout models	8		%
	10-100% load, 15Vout models	7		%
	10-100% load, 24Vout models	6		%
Ripple & Noise*		80	200	mV pk-pk
Temperature coefficient		±0.03		%/°C

* Ripple and Noise are measured at 20MHz bandwidth. Please refer to the application note for specific details.

General Specifications

Parameters	Conditions	Typical	Maximum	Units
Switching frequency	Full load, nominal input	220		KHz
Short circuit protection	Continuous, Auto recovery			
Operating temperature	With derating	-40 to +105		°C
Storage temperature		-55 to +125		°C
Case temperature rise	Ta = 25°C, 12/15/24Vin	25		°C
Manual soldering temperature	1.5mm away from case, duration ≤ 10sec		300	°C
Cooling	Free air convection			
Humidity	Non-condensing	>5	95	% RH
Vibration	10-150Hz, 5G, 0.75mm, along all axis			
Case material	Black plastic (flammability to UL 94V-0)			
Weight		2.4		g
Dimensions (L x W x H)	0.77 x 0.28 x 0.40 inches (19.65 x 7.05 x 10.16 mm)			
MTBF	3 500 000 hrs (MIL-HDBK -217F, t=+25°C) / Full Load			

NOTE: All specifications in this datasheet are measured at an ambient temperature of 25°C, humidity<75%, nominal input voltage and at rated output load unless otherwise specified.

Safety Specifications

Parameters		
Standards	Information technology Equipment	Designed to meet IEC/EN/UL62368-1
	EMC - Conducted and radiated emission	CISPR32 / EN55032, class B with the recommended EMI circuit
	Electrostatic Discharge Immunity	IEC 61000-4-2 Air ±8KV, Contact ±6KV, Criteria B

Derating

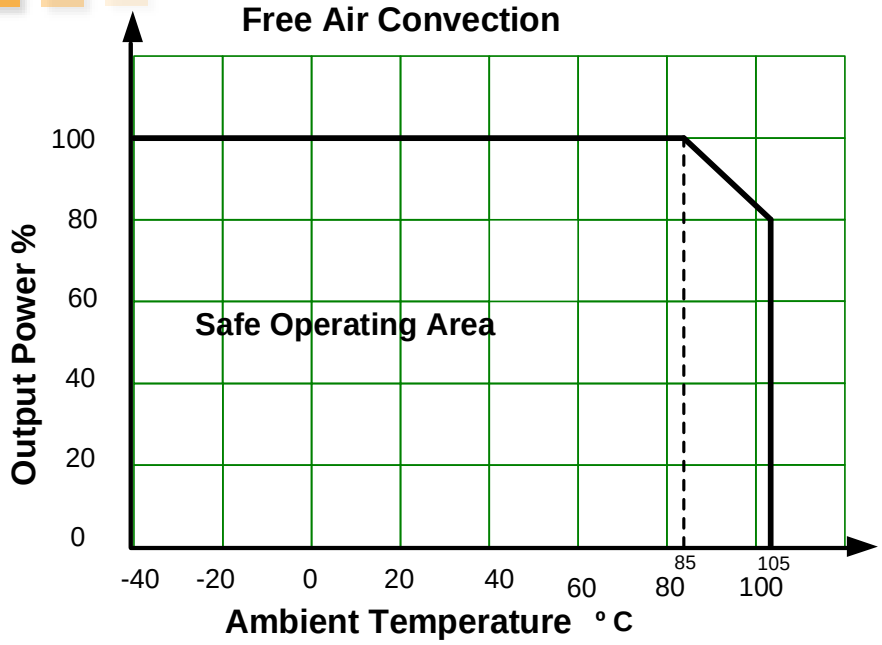

Output voltage tolerance

3.3Vout with 3000VDC models

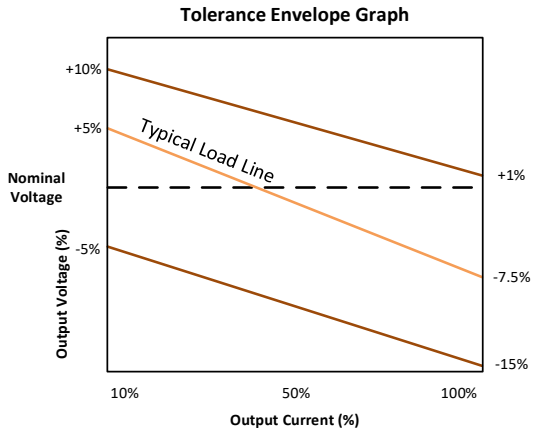

Others

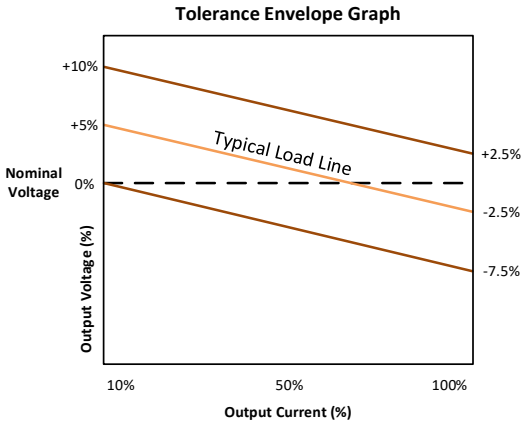

Typical application circuit

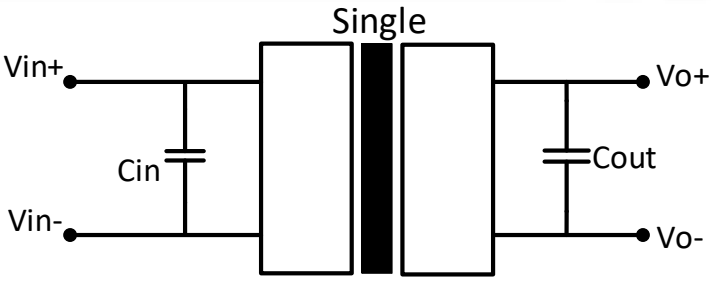

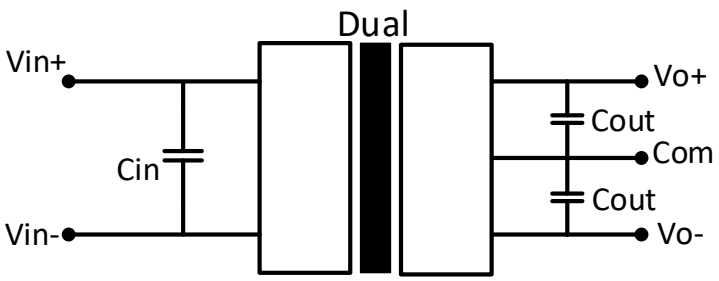

Vin	Cin	Single output models		Dual output models	
		Vout	Cout	Vout	Cout
3.3	4.7µF/16V	3.3V	10µF/16V	±3.3V	4.7µF/16V
5	4.7µF/16V	5V	10µF/16V	±5V	4.7µF/16V
9	2.2µF/25V	9V	2.2µF/25V	±9V	1µF/25V
12	2.2µF/25V	12V	2.2µF/25V	±12V	1µF/25V
15	2.2µF/25V	15V	1µF/50V	±15V	0.47µF/50V
24	1µF/50V	24V	1µF/50V	±24V	0.47µF/50V

Recommended EMI circuit

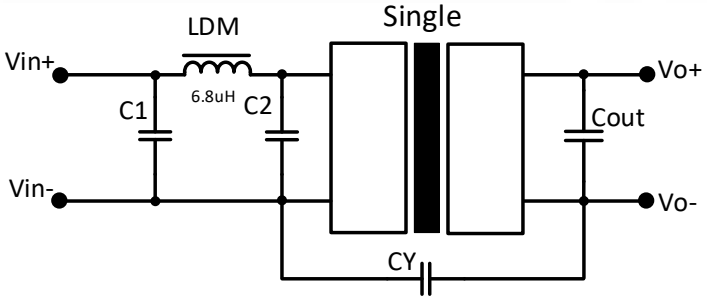

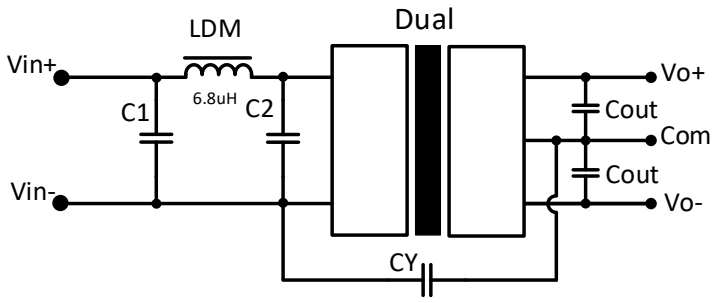

Vin	C1/C2	Vout	CY	Cout
All inputs	4.7µF/50V	All outputs	1nF/2kVdc	Refer to Cout in typical circuit

Dimensions

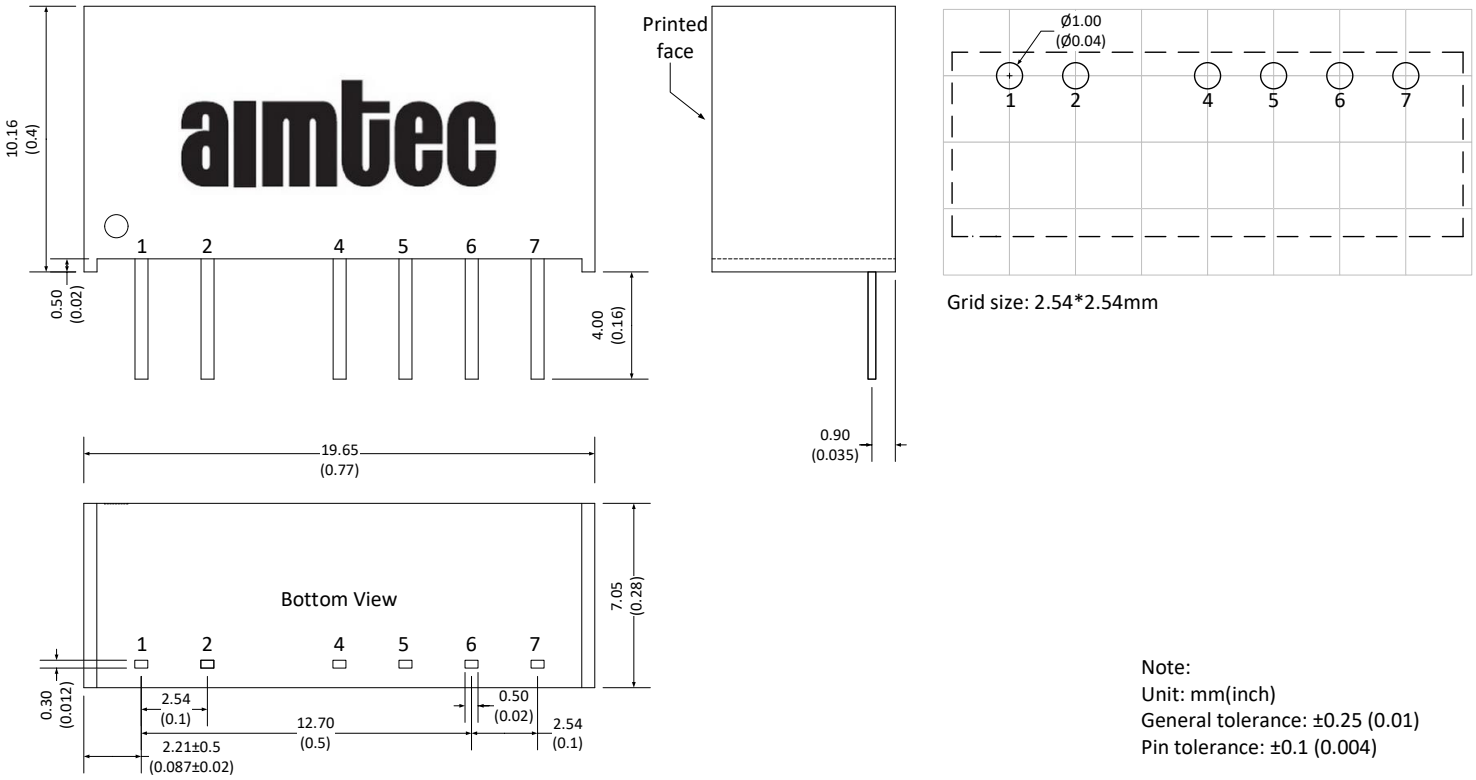

Grid size: 2.54*2.54mm

Note:
Unit: mm(inch)
General tolerance: ±0.25 (0.01)
Pin tolerance: ±0.1 (0.004)

Pin Out Specifications				
Pin	1.5KV isolation Single output	1.5KV isolation Dual output	3KV isolation Single output	3KV isolation Dual output
1	+V Input	+V Input	+V Input	+V Input
2	-V Input	-V Input	-V Input	-V Input
4	-V Output	-V Output	No pin	No pin
5	No pin	Com	-V Output	-V Output
6	+V Output	+V Output	No pin	Com
7	No pin	No pin	+V Output	+V Output

NOTE: 1. Datasheets are updated as needed and as such, specifications are subject to change without notice. Once printed or downloaded, datasheets are no longer controlled by Aimtec; refer to www.aimtec.com for the most current product specifications. **2.** Product labels shown, including safety agency certifications on labels, may vary based on the date manufactured. **3.** Mechanical drawings and specifications are for reference only. **4.** All specifications are measured at an ambient temperature of 25°C, humidity<75%, nominal input voltage and at rated output load unless otherwise specified. **5.** Aimtec may not have conducted destructive testing or chemical analysis on all internal components and chemicals at the time of publishing this document. CAS numbers and other limited information are considered proprietary and may not be available for release. **6.** This product is not designed for use in critical life support systems, equipment used in hazardous environments, nuclear control systems or other such applications which necessitate specific safety and regulatory standards other the ones listed in this datasheet. **7.** Warranty is in accordance with Aimtec's standard Terms of Sale available at www.aimtec.com.