aimtec
Your Power Partner

Series AM2G-Z

2 Watt | DC-DC Converter



FEATURES:

- Regulated
- High Efficiency up to 80%
- Remote On/Off Control
- 8 Pin SIP Package
- Operating Temperature -40°C to +85°C
- Continuous Short Circuit Protection
- Wide 2:1 Input Range
- Input / Output Isolation 1000 & 3000VDC

Models
Single Output

Model	Input Voltage (V)	Output Voltage (V)	Output Current Max (mA)	Isolation (VDC)	Capacitive Load Max (µF)	Input Current Full Load | No Load (mA)		Efficiency (%)
AM2G-0503SZ	4.5-9	3.3	500	1000	3300	492	15	67
AM2G-0505SZ	4.5-9	5	400	1000	3300	571	15	70
AM2G-0507SZ	4.5-9	7.2	278	1000	470	560	15	71
AM2G-0509SZ	4.5-9	9	222	1000	470	555	30	72
AM2G-0512SZ	4.5-9	12	167	1000	470	555	30	72
AM2G-0515SZ	4.5-9	15	133	1000	470	547	30	73
AM2G-0518SZ	4.5-9	18	111	1000	220	540	30	70
AM2G-0524SZ	4.5-9	24	83	1000	220	533	60	75
AM2G-1203SZ	9-18	3.3	500	1000	3300	205	15	67
AM2G-1205SZ	9-18	5	400	1000	3300	216	15	77
AM2G-1207SZ	9-18	7.2	278	1000	470	215	15	75
AM2G-1209SZ	9-18	9	222	1000	470	213	15	78
AM2G-1212SZ	9-18	12	167	1000	470	208	15	80
AM2G-1215SZ	9-18	15	133	1000	470	213	15	78
AM2G-1224SZ	9-18	24	83	1000	220	208	15	80
AM2G-2403SZ	18-36	3.3	500	1000	3300	98	8	70
AM2G-2405SZ	18-36	5	400	1000	3300	108	8	77
AM2G-2407SZ	18-36	7.2	278	1000	470	106	8	74
AM2G-2409SZ	18-36	9	222	1000	470	104	8	80
AM2G-2412SZ	18-36	12	167	1000	470	104	8	80
AM2G-2415SZ	18-36	15	133	1000	470	104	8	80
AM2G-2418SZ	18-36	18	111	1000	220	104	8	78
AM2G-2424SZ	18-36	24	83	1000	220	104	8	80
AM2G-4803SZ	36-72	3.3	500	1000	3300	48	6	71
AM2G-4805SZ	36-72	5	400	1000	3300	56	6	74
AM2G-4807SZ	36-72	7.2	278	1000	470	55	6	74
AM2G-4809SZ	36-72	9	222	1000	470	53	6	78
AM2G-4812SZ	36-72	12	167	1000	470	53	6	78
AM2G-4815SZ	36-72	15	133	1000	470	53	6	78
AM2G-4824SZ	36-72	24	83	1000	220	52	6	80
AM2G-0503SH30Z	4.5-9	3.3	500	3000	3300	492	15	67
AM2G-0505SH30Z	4.5-9	5	400	3000	3300	571	15	70
AM2G-0509SH30Z	4.5-9	9	222	3000	470	555	30	72
AM2G-0512SH30Z	4.5-9	12	167	3000	470	555	30	72
AM2G-0515SH30Z	4.5-9	15	133	3000	470	547	30	73
AM2G-0524SH30Z	4.5-9	24	83	3000	220	533	60	75
AM2G-1203SH30Z	9-18	3.3	500	3000	3300	205	15	67
AM2G-1205SH30Z	9-18	5	400	3000	3300	216	15	77
AM2G-1209SH30Z	9-18	9	222	3000	470	213	15	78
AM2G-1212SH30Z	9-18	12	167	3000	470	208	15	80
AM2G-1215SH30Z	9-18	15	133	3000	470	213	15	78
AM2G-1218SH30Z	9-18	18	111	3000	220	210	15	78
AM2G-1224SH30Z	9-18	24	83	3000	220	208	15	80

Models
Single Output (continued)

Model	Input Voltage (V)	Output Voltage (V)	Output Current Max (mA)	Isolation (VDC)	Capacitive Load Max (µF)	Input Current Full Load | No Load (mA)		Efficiency (%)
AM2G-2403SH30Z	18-36	3.3	500	3000	3300	98	8	70
AM2G-2405SH30Z	18-36	5	400	3000	3300	108	8	77
AM2G-2407SH30Z	18-36	7.2	278	3000	470	106	8	74
AM2G-2409SH30Z	18-36	9	222	3000	470	104	8	80
AM2G-2412SH30Z	18-36	12	167	3000	470	104	8	80
AM2G-2415SH30Z	18-36	15	133	3000	470	104	8	80
AM2G-2424SH30Z	18-36	24	83	3000	220	104	8	80
AM2G-4803SH30Z	36-72	3.3	500	3000	3300	48	6	71
AM2G-4805SH30Z	36-72	5	400	3000	3300	56	6	74
AM2G-4809SH30Z	36-72	9	222	3000	470	53	6	78
AM2G-4812SH30Z	36-72	12	167	3000	470	53	6	78
AM2G-4815SH30Z	36-72	15	133	3000	470	53	6	78
AM2G-4824SH30Z	36-72	24	83	3000	220	52	6	80

Models
Dual Output

Model	Input Voltage (V)	Output Voltage (V)	Output Current Max (mA)	Isolation (VDC)	Capacitive Load Max (µF)	Input Current Full Load | No Load (mA)		Efficiency (%)
AM2G-0503DZ	4.5-9	±3.3	±250	1000	±1000	471	20	65
AM2G-0505DZ	4.5-9	±5	±200	1000	±1000	571	20	70
AM2G-0507DZ	4.5-9	±7.2	±139	1000	±220	560	20	70
AM2G-0509DZ	4.5-9	±9	±111	1000	±220	540	20	74
AM2G-0512DZ	4.5-9	±12	±83	1000	±220	533	25	75
AM2G-0515DZ	4.5-9	±15	±67	1000	±220	533	25	75
AM2G-0518DZ	4.5-9	±18	±56	1000	±100	540	30	73
AM2G-0524DZ	4.5-9	±24	±42	1000	±100	563	60	71
AM2G-1203DZ	9-18	±3.3	±250	1000	±1000	188	15	67
AM2G-1205DZ	9-18	±5	±200	1000	±1000	222	15	75
AM2G-1207DZ	9-18	±7.2	±139	1000	±220	215	15	75
AM2G-1209DZ	9-18	±9	±111	1000	±220	210	15	79
AM2G-1212DZ	9-18	±12	±83	1000	±220	208	15	80
AM2G-1215DZ	9-18	±15	±67	1000	±220	210	15	79
AM2G-1218DZ	9-18	±18	±56	1000	±100	210	15	78
AM2G-1224DZ	9-18	±24	±42	1000	±100	219	30	76
AM2G-2403DZ	18-36	±3.3	±250	1000	±1000	94	8	73
AM2G-2405DZ	18-36	±5	±200	1000	±1000	106	8	78
AM2G-2407DZ	18-36	±7.2	±139	1000	±220	106	8	75
AM2G-2409DZ	18-36	±9	±111	1000	±220	105	8	79
AM2G-2412DZ	18-36	±12	±83	1000	±220	104	8	80
AM2G-2415DZ	18-36	±15	±67	1000	±220	104	8	80
AM2G-2418DZ	18-36	±18	±56	1000	±100	104	8	78
AM2G-2424DZ	18-36	±24	±42	1000	±100	106	20	78
AM2G-4803DZ	36-72	±3.3	±250	1000	±1000	47	6	73
AM2G-4805DZ	36-72	±5	±200	1000	±1000	56	6	74
AM2G-4809DZ	36-72	±9	±111	1000	±220	53	6	79
AM2G-4815DZ	36-72	±15	±67	1000	±220	52	6	80
AM2G-4824DZ	36-72	±24	±42	1000	±100	55	12	75

Models

Dual Output (continued)

Model	Input Voltage (V)	Output Voltage (V)	Output Current Max (mA)	Isolation (VDC)	Capacitive Load Max (µF)	Input Current Full Load | No Load (mA)		Efficiency (%)
AM2G-0503DH30Z	4.5-9	±3.3	±250	3000	±1000	471	20	65
AM2G-0505DH30Z	4.5-9	±5	±200	3000	±1000	571	20	70
AM2G-0509DH30Z	4.5-9	±9	±111	3000	±220	540	20	74
AM2G-0512DH30Z	4.5-9	±12	±83	3000	±220	533	25	75
AM2G-0515DH30Z	4.5-9	±15	±67	3000	±220	533	25	75
AM2G-0524DH30Z	4.5-9	±24	±42	3000	±100	563	60	71
AM2G-1203DH30Z	9-18	±3.3	±250	3000	±1000	188	15	67
AM2G-1205DH30Z	9-18	±5	±200	3000	±1000	222	15	75
AM2G-1209DH30Z	9-18	±9	±111	3000	±220	210	15	79
AM2G-1212DH30Z	9-18	±12	±83	3000	±220	208	15	80
AM2G-1215DH30Z	9-18	±15	±67	3000	±220	210	15	79
AM2G-1218DH30Z	9-18	±18	±56	3000	±100	210	15	78
AM2G-1224DH30Z	9-18	±24	±42	3000	±100	219	30	76
AM2G-2403DH30Z	18-36	±3.3	±250	3000	±1000	94	8	73
AM2G-2405DH30Z	18-36	±5	±200	3000	±1000	106	8	78
AM2G-2407DH30Z	18-36	±7.2	±139	3000	±220	106	8	75
AM2G-2409DH30Z	18-36	±9	±111	3000	±220	105	8	79
AM2G-2412DH30Z	18-36	±12	±83	3000	±220	104	8	80
AM2G-2415DH30Z	18-36	±15	±67	3000	±220	104	8	80
AM2G-2424DH30Z	18-36	±24	±42	3000	±100	106	20	78
AM2G-4803DH30Z	36-72	±3.3	±250	3000	±1000	47	6	73
AM2G-4805DH30Z	36-72	±5	±200	3000	±1000	56	6	74
AM2G-4809DH30Z	36-72	±9	±111	3000	±220	53	6	79
AM2G-4812DH30Z	36-72	±12	±83	3000	±220	53	6	79
AM2G-4815DH30Z	36-72	±15	±67	3000	±220	52	6	80
AM2G-4824DH30Z	36-72	±24	±42	3000	±100	55	12	75

NOTE: All specifications in this datasheet are measured at an ambient temperature of 25°C, humidity<75%, nominal input voltage and at rated output load unless otherwise specified.

Input Specifications

Parameters	Nominal	Typical	Maximum	Units
Voltage range	5	4.5-9		VDC
	12	9-18		VDC
	24	18-36		VDC
	48	36-72		VDC
Filter	Capacitor			
Input Reflected Ripple Current*		35		mA p-p
Absolute Maximum Rating	5 Vin	-0.7-12		VDC
	12 Vin	-0.7-24		VDC
	24 Vin	-0.7-40		VDC
	48 Vin	-0.7-80		VDC
Peak Input Voltage time		100		ms
On/Off Control	ON – low or open (0Vdc to 0.8Vdc)			
	OFF – high (4.5Vdc to 15Vdc) OFF idle current: 5mA typ.			

* Measured with the 12µH source inductor and a 47µF source capacitor (ESR<1.0Ω at 100kHz).

Isolation Specifications

Parameters	Conditions	Typical	Rated	Units
Tested I/O voltage	60sec		1000 & 3000	VDC
Resistance		> 1000		MOhm
Capacitance		60		pF

Output Specifications

Parameters	Conditions	Typical	Maximum	Units
Voltage accuracy			±2	%
Cross Regulation	25% load on 1st load, 100% load 2nd load	±5		%
Short Circuit protection	Continuous			
Short Circuit restart	Auto recovery			
Line voltage regulation	LL~HL		±0.5	%
Load voltage regulation	load 25~100%		±1.0	%
Temperature coefficient		±0.02		%/°C
Ripple & Noise	At 20MHz Bandwidth		80	mV p-p

General Specifications

Parameters	Conditions	Typical	Maximum	Units
Switching frequency		>100	650	KHz
Operating temperature	No derating	-40 to +85		°C
Storage temperature		-40 to +125		°C
Max Case temperature			+100	°C
Cooling	Free air convection			
Humidity			95	%
Case material	Non-conductive black plastic (UL94V-0 rated)			
Weight		4.5		g
Dimensions (L x W x H)	0.86 x 0.36 x 0.44 inch 21.85 x 9.20 x 11.10 mm			
MTBF	>1 610 000 hrs (MIL-HDBK -217F, Ground Benign, t=+25°C)			

Safety Specifications

Parameters	
Agency Approval	CE, UL
Standards	EN55032 Class A, with the recommended EMI circuit
	IEC61000-4-2, Perf. Criteria A
	IEC61000-4-3, Perf. Criteria A
	IEC61000-4-4, Perf. Criteria A (external 220uF/100V cap required)
	IEC61000-4-5, Perf. Criteria A (external 220uF/100V cap required)
	IEC61000-4-6, Perf. Criteria A
	IEC61000-4-8, Perf. Criteria A
	IEC/EN/UL 60950-1:2001 & IEC/EN/UL 62368-1

Switching Frequency vs Input Voltage and Load

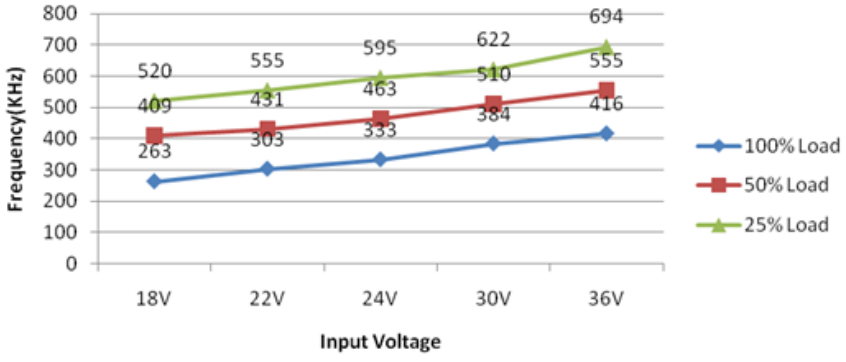

Pin Out Specification

Pin	1000 & 3000VDC	
	Single	Dual
1	- V Input	- V Input
2	+ V Input	+ V Input
3	On/Off Control	On/Off Control
5	N.C.	N.C.
6	+ V Output	+ V Output
7	- V Output	Common
8	N.C.	- V Output

N.C.: Not Connected

Dimensions

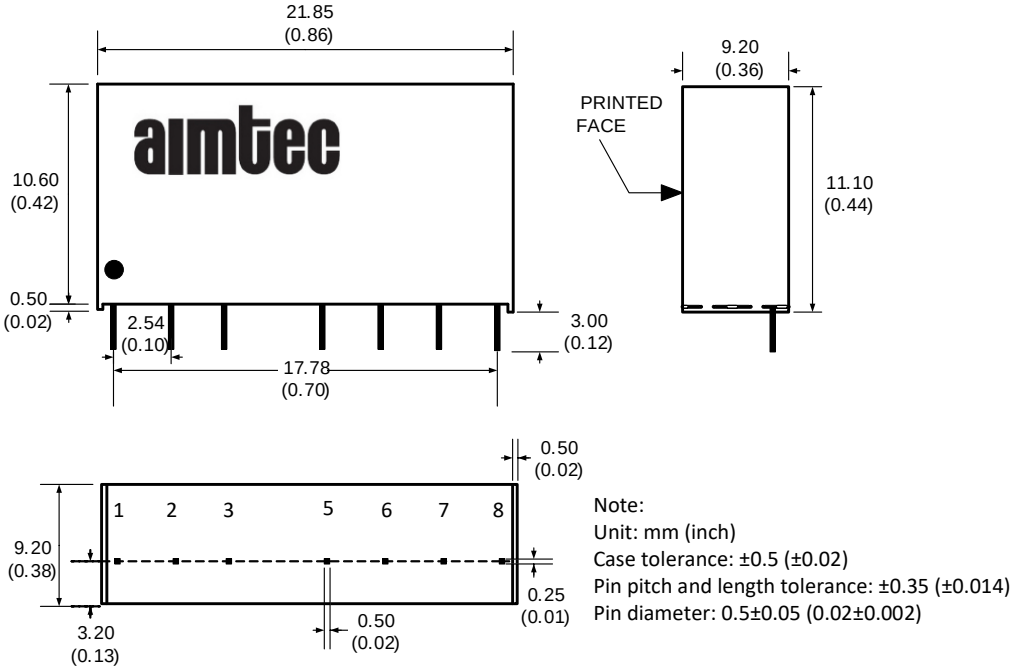

Note:
Unit: mm (inch)
Case tolerance: ±0.5 (±0.02)
Pin pitch and length tolerance: ±0.35 (±0.014)
Pin diameter: 0.5±0.05 (0.02±0.002)

Control ON/OFF pin connection example:

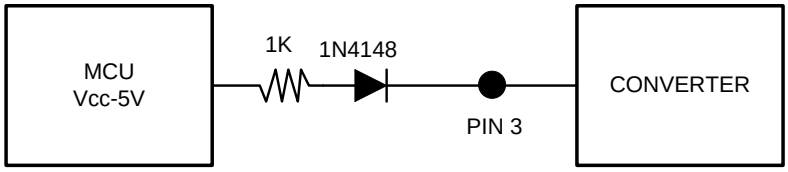

The voltage could be applied trough a limiting resistor and a switching diode. The converter is in a low power mode during high level phase.

Recommended EMI circuit
Conducted Emissions:

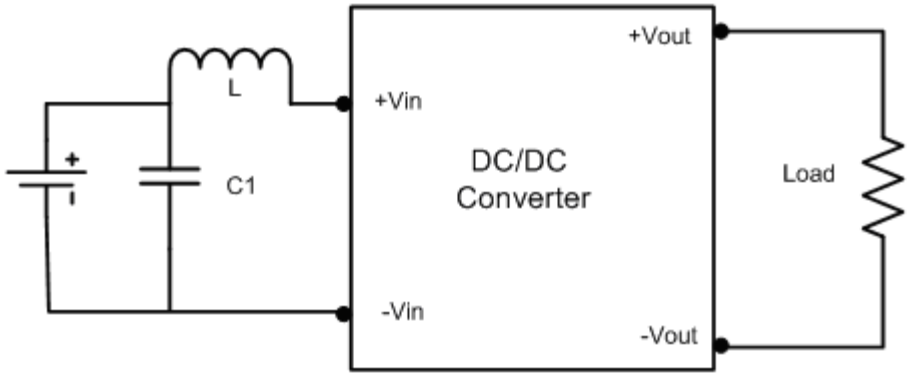

C1	L1
100µF/100V	12 µH

Surge/EFT:

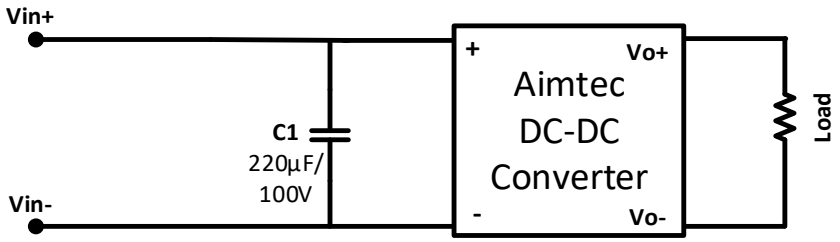

Typical Efficiency Example Charts

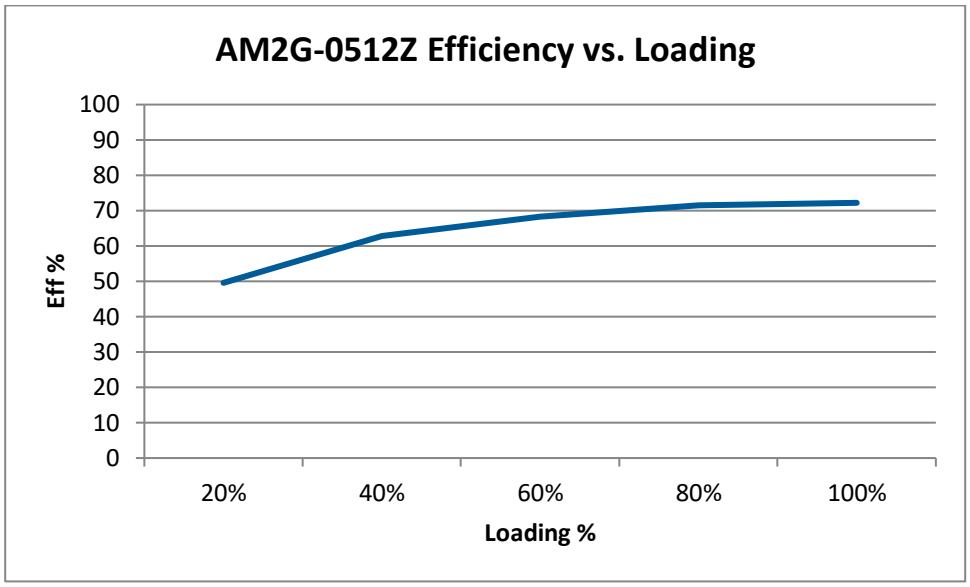

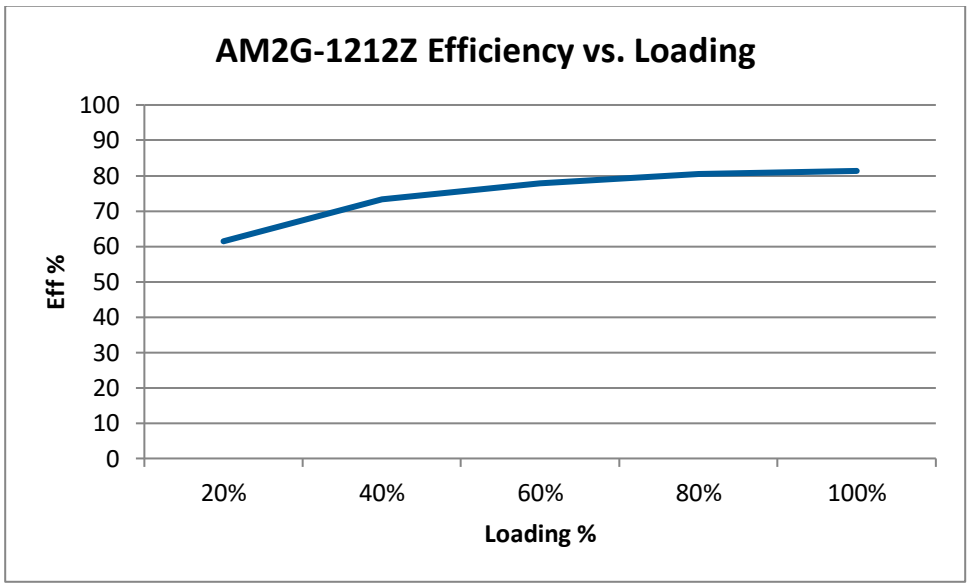

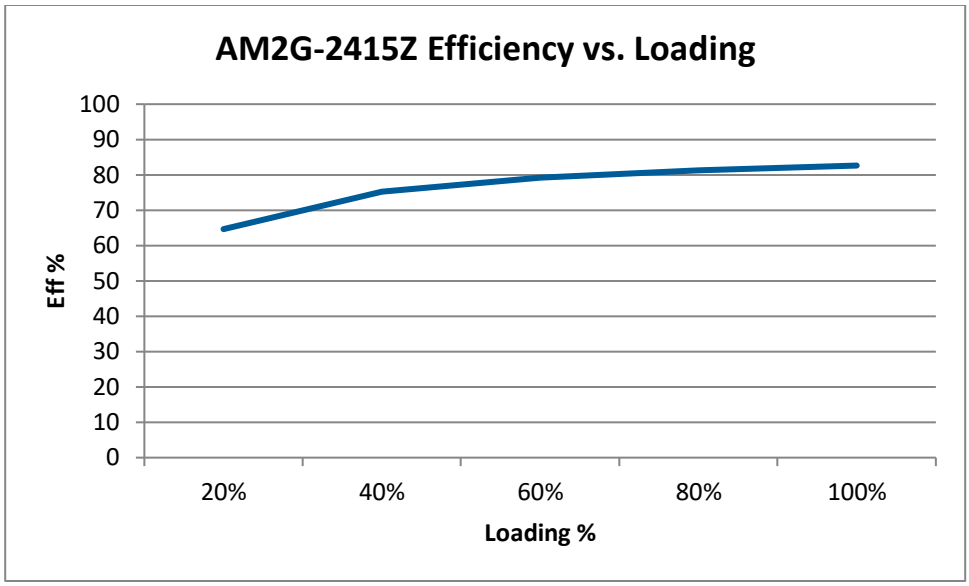

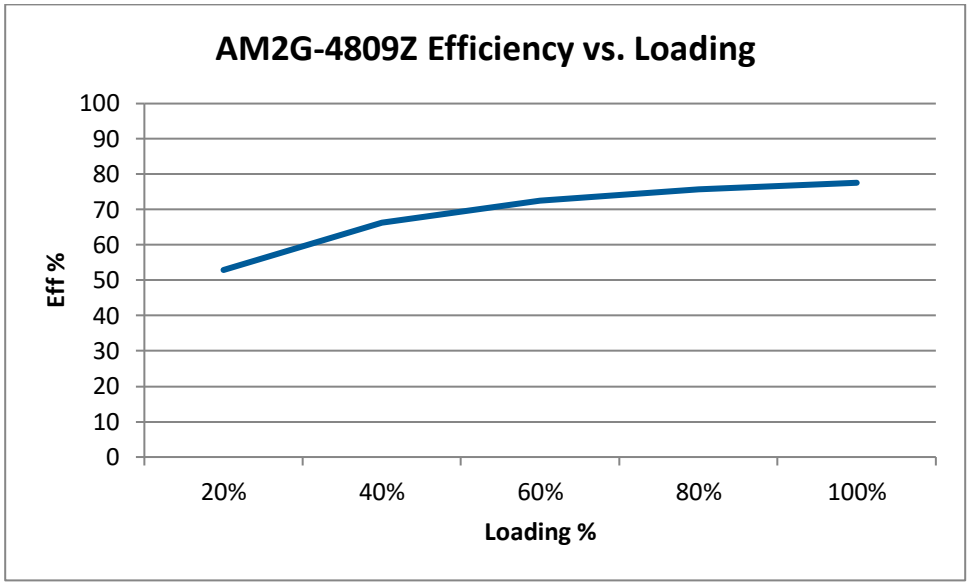

NOTE: 1. Datasheets are updated as needed and as such, specifications are subject to change without notice. Once printed or downloaded, datasheets are no longer controlled by Aimtec; refer to www.aimtec.com for the most current product specifications. **2.** Product labels shown, including safety agency certifications on labels, may vary based on the date manufactured. **3.** Mechanical drawings and specifications are for reference only. **4.** All specifications are measured at an ambient temperature of 25°C, humidity<75%, nominal input voltage and at rated output load unless otherwise specified. **5.** Aimtec may not have conducted destructive testing or chemical analysis on all internal components and chemicals at the time of publishing this document. CAS numbers and other limited information are considered proprietary and may not be available for release. **6.** This product is not designed for use in critical life support systems, equipment used in hazardous environments, nuclear control systems or other such applications which necessitate specific safety and regulatory standards other the ones listed in this datasheet. **7.** Warranty is in accordance with Aimtec's standard Terms of Sale available at www.aimtec.com.