Series AM2M-NZ

2 Watt | DC-DC Converter

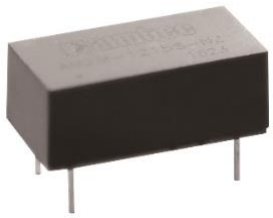

FEATURES:

- Continuous short-circuit protection
- Operating temperature: -40°C to +85°C
- High efficiency up to 85%
- DIP 14 package
- Isolation Voltage 1500 and 3000VDC
- Low Isolation Capacitance

Models
Single output

Model	Input Voltage (V)	Max Input Current Full/No Load (mA)	Output Voltage (V)	Output Current max (mA)	Isolation (VDC)	Max Capacitive Load(uF)	Efficiency (%)
AM2M-0303S-NZ	2.97-3.63	777/40	3.3	400	1500	220	70
AM2M-0305S-NZ	2.97-3.63	777/40	5	400	1500	220	74
AM2M-0503S-NZ	4.5-5.5	500/35	3.3	400	1500	220	74
AM2M-0505S-NZ	4.5-5.5	500/35	5	400	1500	220	80
AM2M-0509S-NZ	4.5-5.5	500/35	9	222	1500	220	84
AM2M-0512S-NZ	4.5-5.5	500/35	12	167	1500	220	84
AM2M-0515S-NZ	4.5-5.5	500/35	15	133	1500	220	84
AM2M-0524S-NZ	4.5-5.5	500/35	24	83	1500	220	84
AM2M-0915S-NZ	8.1-9.9	278/25	15	133	1500	220	83
AM2M-1205S-NZ	10.8-13.2	208/20	5	400	1500	220	80
AM2M-1209S-NZ	10.8-13.2	208/20	9	222	1500	220	83
AM2M-1212S-NZ	10.8-13.2	208/20	12	167	1500	220	82
AM2M-1215S-NZ	10.8-13.2	208/20	15	133	1500	220	84
AM2M-1224S-NZ	10.8-13.2	208/20	24	83	1500	220	84
AM2M-2405S-NZ	21.6-26.4	105/10	5	400	1500	220	79
AM2M-2409S-NZ	21.6-26.4	105/10	9	222	1500	220	85
AM2M-2412S-NZ	21.6-26.4	105/10	12	167	1500	220	83
AM2M-2415S-NZ	21.6-26.4	105/10	15	133	1500	220	84
AM2M-2424S-NZ	21.6-26.4	105/10	24	83	1500	220	84
AM2M-0505SH30-NZ	4.5-5.5	500/35	5	400	3000	220	80
AM2M-0509SH30-NZ	4.5-5.5	500/35	9	222	3000	220	84
AM2M-0512SH30-NZ	4.5-5.5	500/35	12	167	3000	220	84
AM2M-0515SH30-NZ	4.5-5.5	500/35	15	133	3000	220	84
AM2M-0524SH30-NZ	4.5-5.5	500/35	24	83	3000	220	84
AM2M-1205SH30-NZ	10.8-13.2	208/20	5	400	3000	220	80
AM2M-1212SH30-NZ	10.8-13.2	208/20	12	167	3000	220	82
AM2M-1215SH30-NZ	10.8-13.2	208/20	15	133	3000	220	84
AM2M-1224SH30-NZ	10.8-13.2	208/20	24	83	3000	220	85
AM2M-1505SH30-NZ	13.5-16.5	159/15	5	400	3000	220	80
AM2M-1509SH30-NZ	13.5-16.5	159/15	9	222	3000	220	84
AM2M-1515SH30-NZ	13.5-16.5	159/15	15	133	3000	220	82
AM2M-2405SH30-NZ	21.6-26.4	105/10	5	400	3000	220	80
AM2M-2409SH30-NZ	21.6-26.4	105/10	9	222	3000	220	85
AM2M-2412SH30-NZ	21.6-26.4	105/10	12	167	3000	220	83
AM2M-2415SH30-NZ	21.6-26.4	105/10	15	133	3000	220	84
AM2M-2424SH30-NZ	21.6-26.4	105/10	24	83	3000	220	85

Models
Dual output

Model	Input Voltage (V)	Max Input Current Full/No Load (mA)	Output Voltage (V)	Output Current max (mA)	Isolation (VDC)	Max Capacitive Load(uF)	Efficiency (%)
AM2M-0505D-NZ	4.5-5.5	500/35	±5	±200	1500	100	80
AM2M-0509D-NZ	4.5-5.5	500/35	±9	±111	1500	100	84
AM2M-0512D-NZ	4.5-5.5	500/35	±12	±83	1500	100	84
AM2M-0515D-NZ	4.5-5.5	500/35	±15	±67	1500	100	84

AM2M-0524D-NZ	4.5-5.5	500/35	±24	±42	1500	100	84
AM2M-1205D-NZ	10.8-13.2	208/20	±5	±200	1500	100	80
AM2M-1209D-NZ	10.8-13.2	208/20	±9	±111	1500	100	84
AM2M-1212D-NZ	10.8-13.2	208/20	±12	±83	1500	100	83
AM2M-1215D-NZ	10.8-13.2	208/20	±15	±67	1500	100	84
AM2M-1224D-NZ	10.8-13.2	208/20	±24	±42	1500	100	84
AM2M-1515D-NZ	13.5-16.5	159/15	±15	±67	1500	100	84
AM2M-2405D-NZ	21.6-26.4	105/10	±5	±200	1500	100	79
AM2M-2409D-NZ	21.6-26.4	105/10	±9	±111	1500	100	84
AM2M-2412D-NZ	21.6-26.4	105/10	±12	±83	1500	100	83
AM2M-2415D-NZ	21.6-26.4	105/10	±15	±67	1500	100	84
AM2M-2424D-NZ	21.6-26.4	105/10	±24	±42	1500	100	84
AM2M-0505DH30-NZ	4.5-5.5	500/35	±5	±200	3000	100	80
AM2M-0509DH30-NZ	4.5-5.5	500/35	±9	±111	3000	100	84
AM2M-0512DH30-NZ	4.5-5.5	500/35	±12	±83	3000	100	84
AM2M-0515DH30-NZ	4.5-5.5	500/35	±15	±67	3000	100	84
AM2M-0524DH30-NZ	4.5-5.5	500/35	±24	±42	3000	100	84
AM2M-1205DH30-NZ	10.8-13.2	208/20	±5	±200	3000	100	80
AM2M-1209DH30-NZ	10.8-13.2	208/20	±9	±111	3000	100	80
AM2M-1212DH30-NZ	10.8-13.2	208/20	±12	±83	3000	100	83
AM2M-1215DH30-NZ	10.8-13.2	208/20	±15	±67	3000	100	85
AM2M-1224DH30-NZ	10.8-13.2	208/20	±24	±42	3000	100	85
AM2M-1509DH30-NZ	13.5-16.5	159/15	±9	±111	3000	100	84
AM2M-1515DH30-NZ	13.5-16.5	159/15	±15	±67	3000	100	84
AM2M-2405DH30-NZ	21.6-26.4	105/10	±5	±200	3000	100	79
AM2M-2412DH30-NZ	21.6-26.4	105/10	±12	±83	3000	100	83
AM2M-2415DH30-NZ	21.6-26.4	105/10	±15	±67	3000	100	84
AM2M-2424DH30-NZ	21.6-26.4	105/10	±24	±42	3000	100	84

NOTE: All specifications in this datasheet are measured at an ambient temperature of 25°C, humidity<75%, nominal input voltage and at rated output load unless otherwise specified.

Input Specifications

Parameters	Nominal	Typical	Maximum	Units
Voltage range	3.3V 5V 9V 12V 15V 24V	2.97-3.63 4.5-5.5 8.1-9.9 10.8-13.2 13.5-16.5 21.6-26.4		VDC
Filter		Filter Capacitor		
Absolute Maximum Rating	3.3V 5V 9V 12V 15V 24V		-0.7 - 5 -0.7 – 9 -0.7 – 12 -0.7 - 18 -0.7 - 21 -0.7 - 30	VDC
Peak Input Voltage time			1	s
Input reflected current				mA

Isolation Specifications

Parameters	Conditions	Typical	Maximum	Units
Tested I/O voltage	60 Sec, <1mA	1500 & 3000		VDC
Resistance		>1000		MOhm
Capacitance	100KHz/0.1V, 24V 100KHZ/0.1V, Others	50 20		pF

Output Specifications

Parameters	Conditions	Typical	Maximum	Units
Voltage accuracy	See tolerance envelope graph			
Short Circuit protection	24Vin models, AM2M-0303S-NZ, AM2M-0305S-NZ, AM2M-0512DH30-NZ, AM2M-0512D-NZ, AM2M-0515DH30-NZ, AM2M-0515D-NZ, AM2M-0524DH30-NZ, AM2M-0524D-NZ, AM2M-0524SH30-NZ, AM2M-0524S-NZ, AM2M-1205DH30-NZ, AM2M-1205D-NZ, AM2M-1205SH30-NZ, AM2M-1205S-NZ, AM2M-1209D-NZ AM2M-1209S-NZ, AM2M-1212DH30-NZ, AM2M-1212D-NZ, AM2M-1212SH30-NZ, AM2M-1212S-NZ AM2M-1215DH30-NZ, AM2M-1215D-NZ AM2M-1215SH30-NZ, AM2M-1215S-NZ AM2M-1224DH30-NZ, AM2M-1224D-NZ AM2M-1224SH30-NZ, AM2M-1224S-NZ AM2M-1505SH30-NZ, AM2M-1509DH30-NZ AM2M-1509SH30-NZ, AM2M-1515DH30-NZ AM2M-1515D-NZ, AM2M-1515SH30-NZ		1	s
	Others	Continuous, auto-recovery		
Line voltage regulation	For Vin change of 1%		±1.2	% of Vin
	3.3Vout models, For Vin change of 1%		±1.5	
Load voltage regulation	10% to 100% load	±15		%
Temperature coefficient	Nominal input,100% full load		±0.03	%/ºC
Ripple & Noise	20MHz Bandwidth	70	200	mV p-p

General Specifications

Parameters	Conditions	Typical	Maximum	Units
Switching frequency	100% load	100		KHz
Operating temperature	No Derating	-40 to +85		ºC
Storage temperature	-55 to +125			ºC
Maximum case temperature			100	ºC
Cooling	Free Convection			
Humidity			95	% RH
Case material	Black flame-retardant heat-proof epoxy resin (UL94-V0)			
Weight	2.8			g
Dimensions (L x W x H)	0.8 x 0.4 x 0.32 inches 20.32 x 10.16 x 8.2 mm			
MTBF	3,500,000 hrs (MIL-HDFK-217F@25 ºC)			
Maximum soldering temperature	1.5mm from case for 10 seconds		300	ºC

Safety Specifications

Parameters	
Approvals	UL (except 3.3V, 9V and 15V input models and AM2M-0503S-NZ)
Standards	IEC/EN/UL60950-1
	EN55022 Class B (see recommended circuit)
	IEC61000-4-2, Perf. Criteria B (ESD Contact +/- 6KV)

Typical Characteristics

3.3V output models

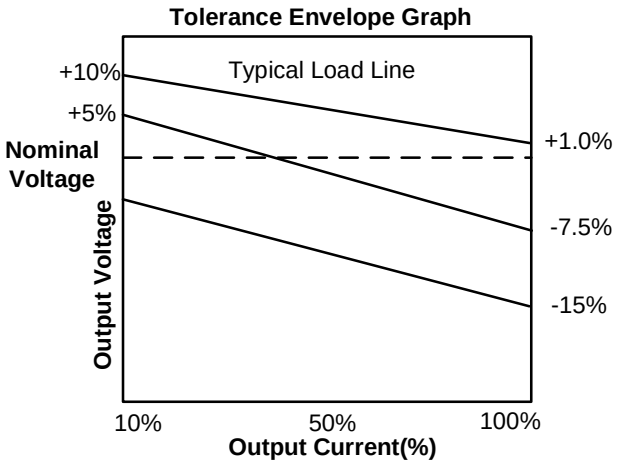

Others

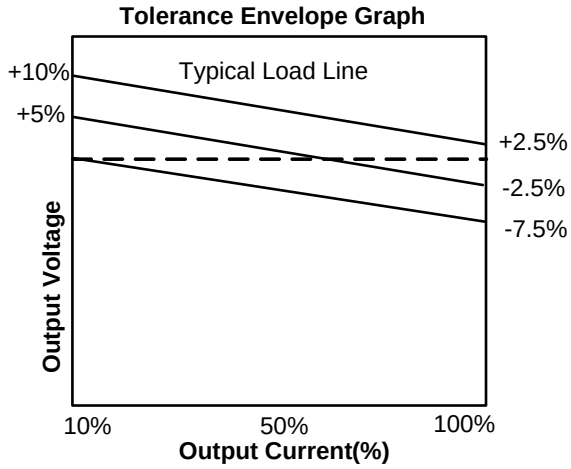

Pin Out Specifications

1500VDC Isolation		
Pin	Single	Dual
1	-Vin	-Vin
7	NC	NC
8	-Vout	Common
9	+Vout	+Vout
11	No pin	-Vout
14	+Vin	+Vin

3000VDC Isolation		
Pin	Single	Dual
1	-Vin	-Vin
7	NC	NC
8	+Vout	+Vout
9	No Pin	Common
10	-Vout	-Vout
14	+Vin	+Vin

NC: not connected

Dimensions

Dual 1500VDC Isolated models

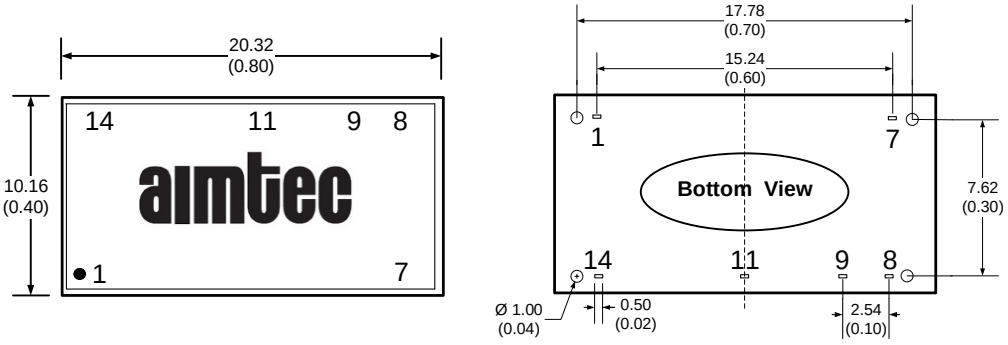

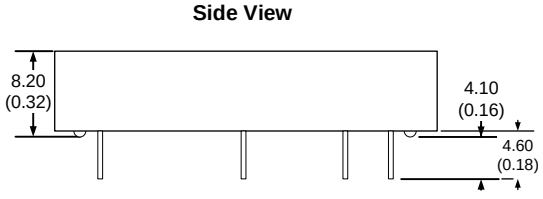

Dimensions are in mm (inch)
Pin Pitch Tolerance: ±0.10 mm (±0.004 inch)
Case Tolerance: ±0.25 mm (±0.01 inch)

3000VDC Isolated models

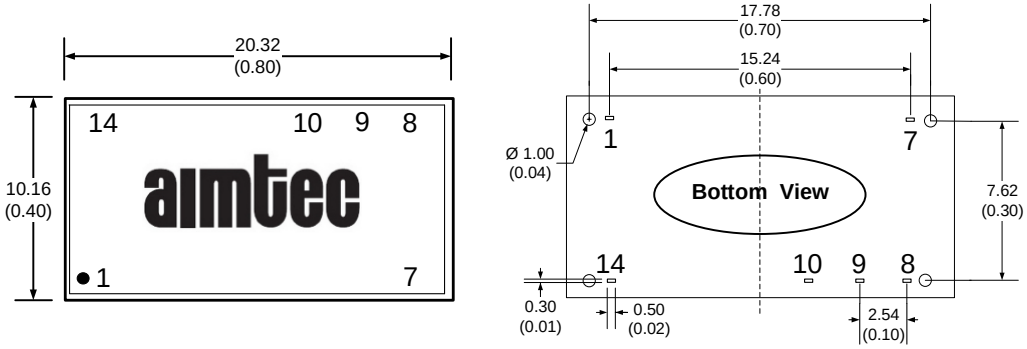

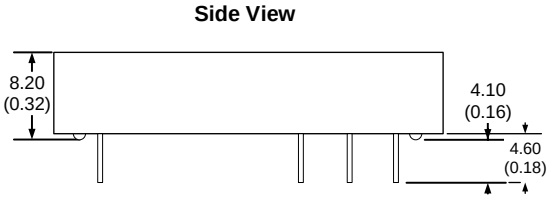

Dimensions are in mm (inch)
Pin Pitch Tolerance: ±0.10 mm (±0.004 inch)
Case Tolerance: ±0.25 mm (±0.01 inch)

Derating

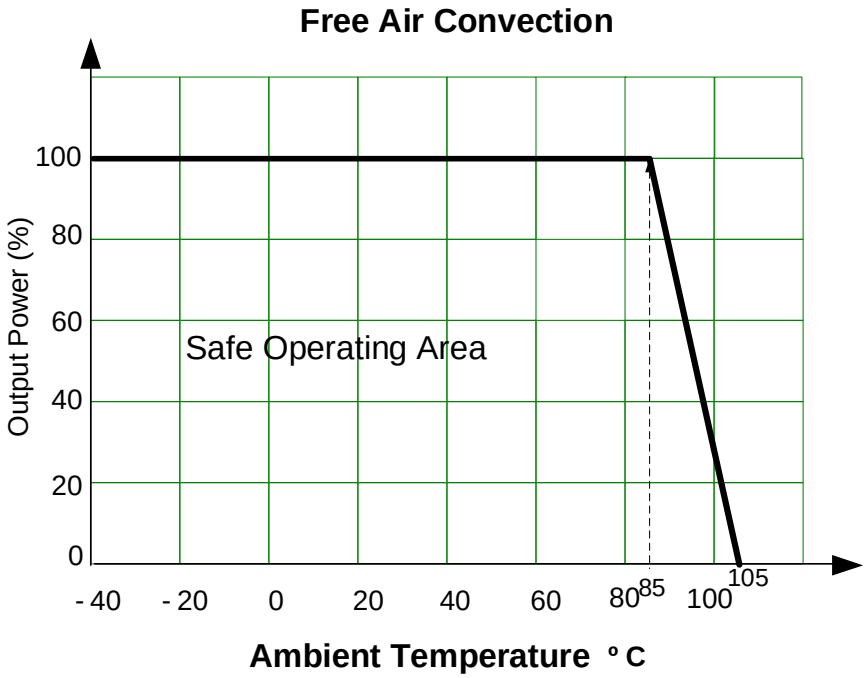

Typical application circuit

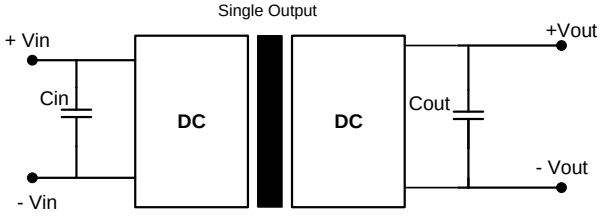

1500VDC Isolated models			
Vin (VDC)	Cin (uF)	Vout (VDC)	Cout (uF)
3.3/5	4.7	3.3/5	10
9/12	2.2	9	4.7
15/24	1	12	2.2
		15/24	1

3000VDC Isolated models			
Vin (VDC)	Cin (uF)	Vout (VDC)	Cout (uF)
5	4.7	5	10
12/15	2.2	9	4.7
24	1	12	2.2
		15	1
		24	0.47

It is not recommended to connect any external capacitor in the application field when output loading is less than 0.5 watt.

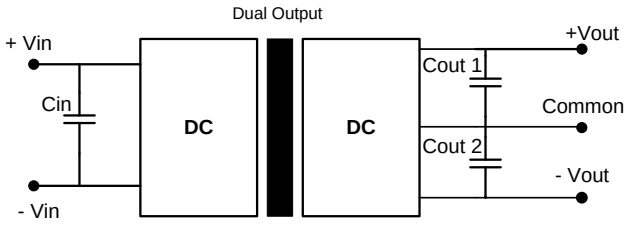

1500VDC Isolated models				3000VDC Isolated models			
Vin (VDC)	Cin (uF)	Vout (VDC)	Cout (uF)	Vin (VDC)	Cin (uF)	Vout (VDC)	Cout (uF)
3.3/5	4.7	±5	4.7	5	4.7	±5	4.7
9/12	2.2	±9	2.2	12/15	2.2	±9	2.2
15/24	1	±12	1	24	1	±12	1
		±15/±24	0.47			±15/±24	0.47

EMI Recommended Circuit (Class B)

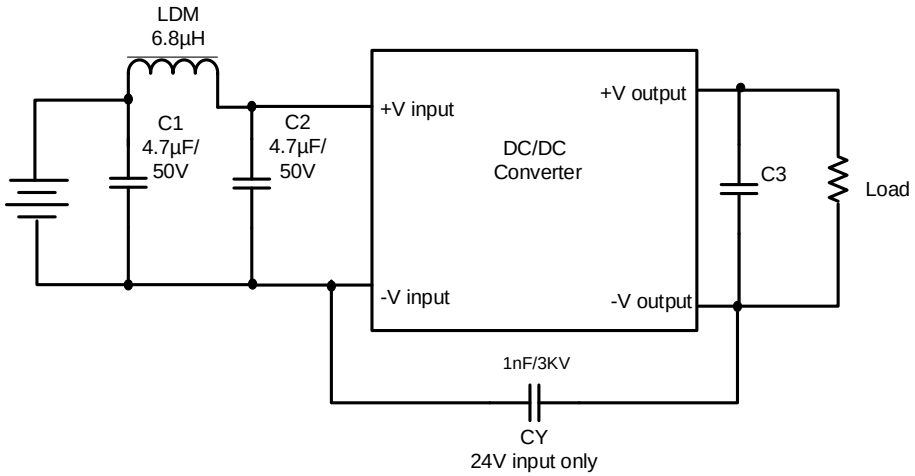

NOTE: Cout values are the same as referenced in the Application Circuit.

NOTE: 1. Datasheets are updated as needed and as such, specifications are subject to change without notice. Once printed or downloaded, datasheets are no longer controlled by Aimtec; refer to www.aimtec.com for the most current product specifications. **2.** Product labels shown, including safety agency certifications on labels, may vary based on the date manufactured. **3.** Mechanical drawings and specifications are for reference only. **4**. All specifications are measured at an ambient temperature of 25°C, humidity<75%, nominal input voltage and at rated output load unless otherwise specified. **5.** Aimtec may not have conducted destructive testing or chemical analysis on all internal components and chemicals at the time of publishing this document. CAS numbers and other limited information are considered proprietary and may not be available for release. **6.** This product is not designed for use in critical life support systems, equipment used in hazardous environments, nuclear control systems or other such applications which necessitate specific safety and regulatory standards other the ones listed in this datasheet. **7.** Warranty is in accordance with Aimtec's standard Terms of Sale available at www.aimtec.com.