aimtec
Your Power Partner

Series AM30C-Z

30 Watt | DC-DC Converter



FEATURES:

- Ultra-compact footprint 1”x1”
- Wide Input Range 2:1
- 1600 VDC Isolation
- Remote ON/OFF Function
- Input Under Voltage lockout
- Continuous Short circuit protection
- Adjustable Output Voltage
- Operating Temperature -40ºC to +100ºC
- Over Current and Over Voltage Protection
- Efficiency up to 92%
- Over Temperature Protection
- Soft Start

Models:
Single output

Model	Input Voltage (V)	Output Voltage (V)	Output Current max (A)	Isolation (VDC)	Max Capacitive Load (uF)	Efficiency (%)
AM30C-1203SZ	9-18	3.3	7	1600	10,000	87
AM30C-1205SZ	9-18	5	6	1600	7200	89
AM30C-1212SZ	9-18	12	2.5	1600	1200	89
AM30C-1215SZ	9-18	15	2	1600	1000	90
AM30C-2403SZ	18-36	3.3	7	1600	10,000	87
AM30C-2405SZ	18-36	5	6	1600	7200	90
AM30C-2412SZ	18-36	12	2.5	1600	1200	90
AM30C-2415SZ	18-36	15	2	1600	1000	91
AM30C-4803SZ	36-75	3.3	7	1600	10,000	89
AM30C-4805SZ	36-75	5	6	1600	7200	91
AM30C-4812SZ	36-75	12	2.5	1600	1200	91
AM30C-4815SZ	36-75	15	2	1600	1000	92

Models:
Dual output

Model	Input Voltage (V)	Output Voltage (V)	Output Current max (A)	Isolation (VDC)	Max Capacitive Load (uF)	Efficiency (%)
AM30C-1212DZ	9-18	±12	±1.25	1600	±750	89
AM30C-1215DZ	9-18	±15	±1	1600	±500	90
AM30C-2412DZ	18-36	±12	±1.25	1600	±750	90
AM30C-2415DZ	18-36	±15	±1	1600	±500	91
AM30C-4812DZ	36-75	±12	±1.25	1600	±750	91
AM30C-4815DZ	36-75	±15	±1	1600	±500	92

***Add suffix “-K” for optional heatsink preinstalled models.**

NOTE: All specifications in this datasheet are measured at an ambient temperature of 25°C, humidity<75%, nominal input voltage and at rated output load unless otherwise specified.

Input Specifications

Parameters	Nominal	Typical	Maximum	Units
Voltage range	12 Vin	9-18		VDC
	24 Vin	18-36		
	48 Vin	36-75		
Filter	π (pi) filter			
Startup time	Nominal Vin with constant resistive load	30		ms
Absolute Maximum Rating	12 Vin		25	VDC
	24 Vin		50	
	48 Vin		100	
Peak Input Voltage time			100	ms
On/Off control	ON – 3 to 12VDC (or open) , reference to pin 2			
	OFF – 0 to 1.2VDC or short pin 2 to pin 3; OFF idle current – 2mA			
No load current			14	mA
Under Voltage Lockout	12 Vin ON/OFF	8.6/7.9		VDC
	24 Vin ON/OFF	17.8/16.5		
	48 Vin ON/OFF	34/32.5		

Input reflected ripple current		30		mA p-p

Isolation Specifications

Parameters	Conditions	Typical	Rated	Units
Tested I/O voltage	1 min		1600	VDC
Case to Input/Output	1 min		1600	VDC
Resistance		>1000		MΩ
Capacitance			2000	pF

Output Specifications

Parameters	Conditions	Typical	Maximum	Units
Voltage accuracy		±1		%
Cross Regulation (Dual Output Models)	25% load on one output - 100% load on second load	±5		%
Over voltage protection	Zener Diode Clamp	120		%
Over current protection	Full Load	150		%
Short Circuit protection	Hiccup, Auto-Recovery	Continuous		
Over temperature protection	Case temperature		115	ºC
Line voltage regulation	HL-LL	±0.5		%
Load voltage regulation (Single)	0% to 100% load	±0.5		%
Load voltage regulation (Dual)	0% to 100% balanced load	±1		%
Temperature coefficient		±0.02		%/ºC
Ripple & Noise* (Single)	20MHz Bandwidth, full load		75	
Ripple & Noise* (Dual)	20MHz Bandwidth, full load		60	mV p-p
Voltage adjustment range	Trim - Single output models only	±10		%
Transient recovery time	25% load step change	250		µs
Transient recovery deviation	25% load step change, 3.3V output		±5	%
	25% load step change, Others		±3	

*Measured with 10µF/25V MLCC on each output.

General Specifications

Parameters	Conditions	Typical	Maximum	Units
Switching frequency	100% load, 3.3V & 5V output	270		KHz
	100% load, others	330		
Operating temperature	With derating above +55°C	-40 to +100		ºC
Storage temperature	-55 to +125			ºC
Maximum case temperature			105	ºC
Cooling	Free air convection			
Humidity			95	% RH
Case material	Copper			
Weight	Without Heatsink	19		g
	With Heatsink	21.9		
Dimensions (L x W x H)	Without Heatsink	1.00 x 1.00 x 0.41 inches	25.40 x 25.40 x 10.40 mm	
	With Heatsink	1.00 x 1.00 x 0.66 inches	25.40 x 25.40 x 16.80 mm	
MTBF	> 370,000 hrs (MIL-HDBK -217F, Ground Benign, t=+25ºC)			
Maximum soldering temperature	1.5mm from case for 10 sec		260	ºC

Safety Specifications

Parameters	
Agency approvals	CE, cULus
Standards	UL60950-1, UL62368-1
	EN55032, Class A, with external EMI filter IEC 61000-4-2, Criteria A IEC 61000-4-3, Criteria A IEC 61000-4-4, Criteria A, with external filter IEC 61000-4-5, Criteria A, with external filter IEC 61000-4-6, Criteria A IEC 61000-4-8, Criteria A

Derating

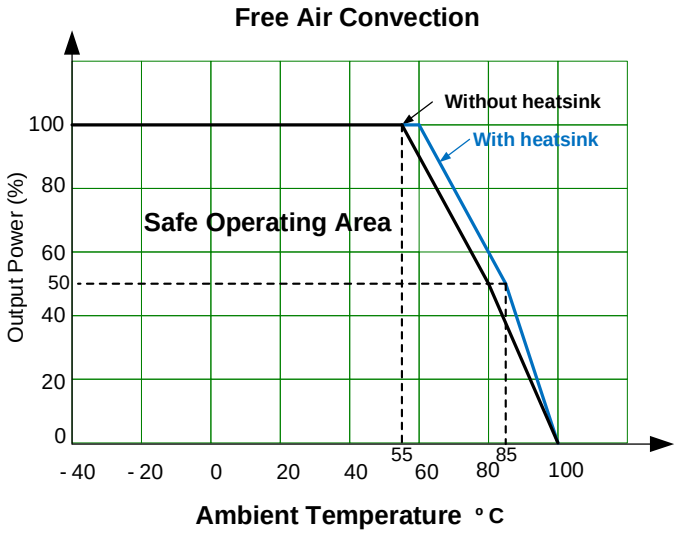

Trimming

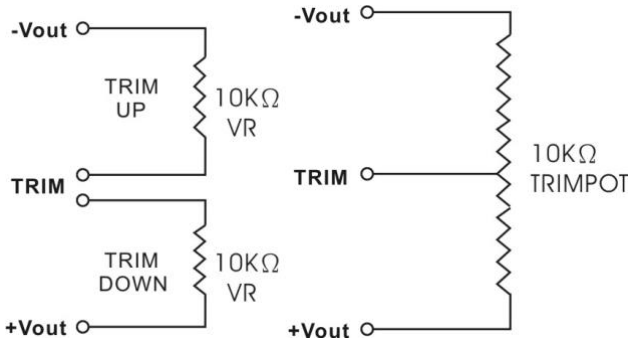

Pin Out Specifications

Pin	Single	Dual
1	+ V input	+ V input
2	- V input	- V input
3	On/Off Control	On/Off Control
4	+ V output	+ V output
5	Trim	Common
6	- V output	- V output

Dimensions

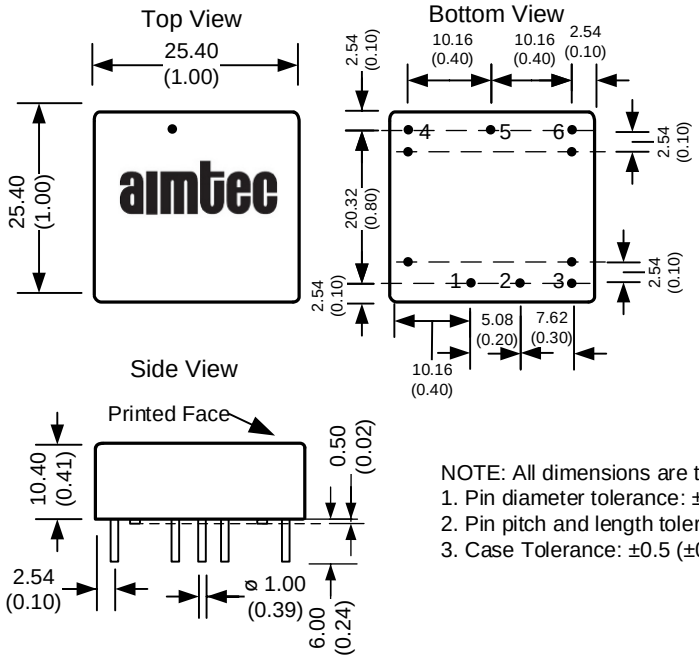

NOTE: All dimensions are typical in millimeters (inches).
1. Pin diameter tolerance: ±0.05 (±0.002)
2. Pin pitch and length tolerance: ±0.35 (±0.014)
3. Case Tolerance: ±0.5 (±0.02)

Dimensions for optional -K models

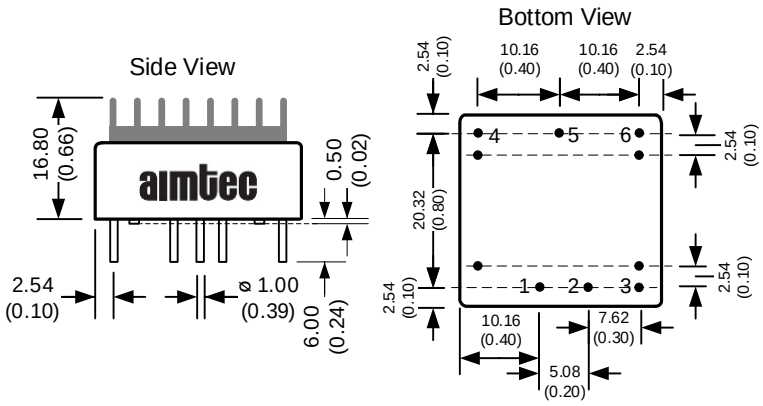

NOTE: All dimensions are typical in millimeters (inches).
1. Pin diameter tolerance: ±0.05 (±0.002)
2. Pin pitch and length tolerance: ±0.35 (±0.014)
3. Case Tolerance: ±0.5 (±0.02)

Recommended Application Circuits for 12V input models only

Conducted/Radiated Emissions

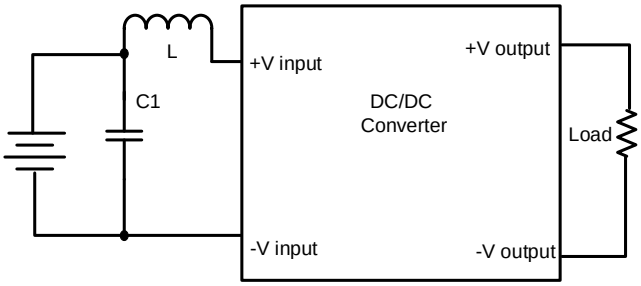

Input Voltage	C1	L
12V	3.3µF/50V	0.82µH

NOTE: 24Vin and 48Vin models do not need external LC filter to meet EN55032, EMI class A emissions.

EFT/Surge external circuit

(EN61000-4-4 and EN61000-4-5)

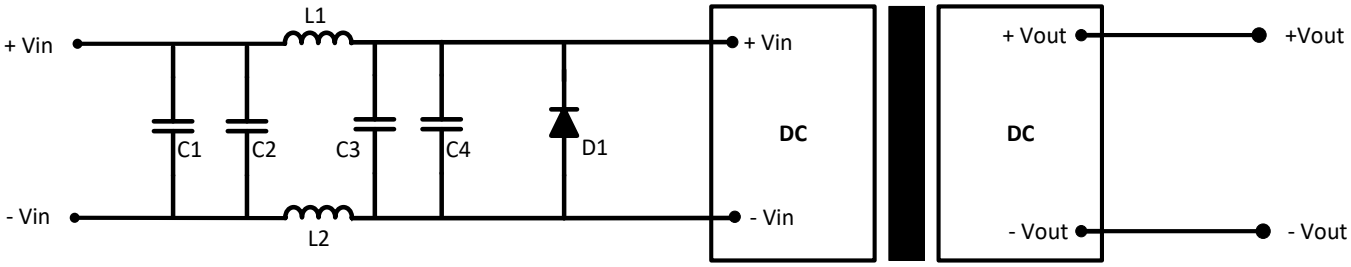

Vin	C1	C2	L1, L2	C3	C4	D1
12V	330 µF / 100V	470 µF / 100V	1 µH	330 µF / 100V	470 µF / 100V	-
24V		-	-	-	-	TVS, 58V, 3kW
48V						TVS, 120V, 3kW

NOTE: 1. Datasheets are updated as needed and as such, specifications are subject to change without notice. Once printed or downloaded, datasheets are no longer controlled by Aimtec; refer to www.aimtec.com for the most current product specifications. **2.** Product labels shown, including safety agency certifications on labels, may vary based on the date manufactured. **3.** Mechanical drawings and specifications are for reference only. **4.** All specifications are measured at an ambient temperature of 25°C, humidity<75%, nominal input voltage and at rated output load unless otherwise specified. **5.** Aimtec may not have conducted destructive testing or chemical analysis on all internal components and chemicals at the time of publishing this document. CAS numbers and other limited information are considered proprietary and may not be available for release. **6.** This product is not designed for use in critical life support systems, equipment used in hazardous environments, nuclear control systems or other such applications which necessitate specific safety and regulatory standards other the ones listed in this datasheet. **7.** Warranty is in accordance with Aimtec's standard Terms of Sale available at www.aimtec.com.