Click to ORDER samples

AM30CW-LPZ

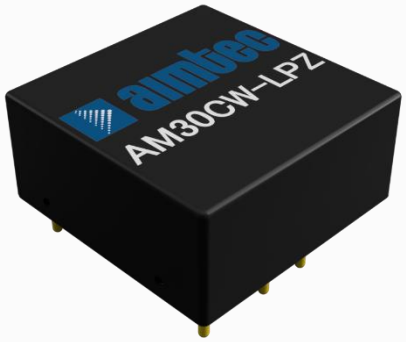

1” x 1”

The AM30CW-LPZ is a 30W DC/DC converter that offers a regulated output which contributes to a more stable and reliable output performance. It features a wide 4:1 input voltage range of 9-75VDC, which will benefit your new system design.

This series offers great operating temperatures, from -40°C to 85°C. Furthermore, an output short circuit protection (OSCP), over-current protection (OCP), over-voltage protection (OVP), and under voltage lock-out (UVLO) come standard with the series.

The AM30CW-LPZ is suitable for distributed power supply systems, industrial controls, power grid, instruments, and communications applications.

Features

- Operating Temp: -40 °C to +85 °C
- High isolation voltage: 1500VDC
- Low ripple & noise, 100mV (p-p), typ.
- Regulated Output
- 1” x 1” package
- Output short circuit, over-current, over-voltage, input under voltage protection

RoHS

3yr Warranty

Summary

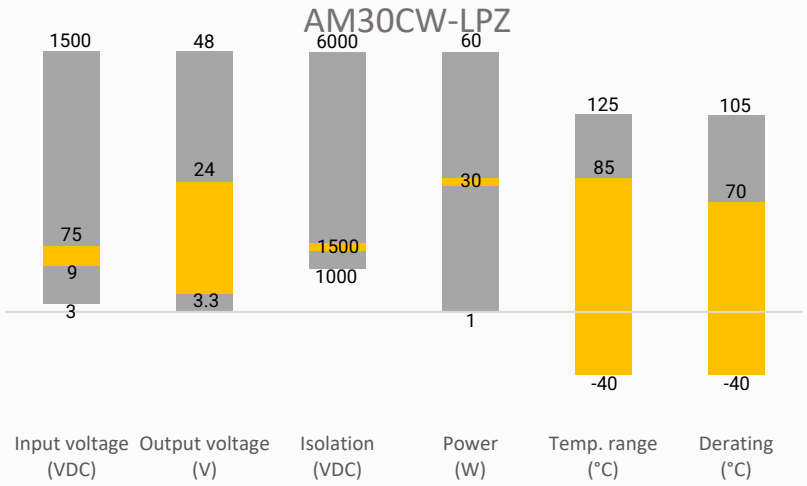

Training

Product Training Video (click to open)

Press Release

Coming Soon!

Application Notes

Applications

Power Grid

Industrial

Telecom

Instrumentation

Models & Specifications

Single Output							
Model	Input Voltage (VDC)	Output Voltage (VDC)	Input Current (mA TYP)		Output Current Max (mA) Full Load	Maximum Capacitive Load (µF)	Efficiency Full Load Typ. (%)
			No Load	Full Load			
AM30CW-2403SLPZ	24 (9-36)	3.3	6	982	6000	10000	84
AM30CW-2405SLPZ	24 (9-36)	5	4	1420	6000	10000	88
AM30CW-2412SLPZ	24 (9-36)	12	4	1388	2500	1500	89
AM30CW-2415SLPZ	24 (9-36)	15	4	1388	2000	1000	89
AM30CW-2424SLPZ	24 (9-36)	24	4	1388	1250	750	90
AM30CW-4803SLPZ	48 (18-75)	3.3	10	497	6000	7200	83
AM30CW-4805SLPZ	48 (18-75)	5	8	710	6000	7200	87
AM30CW-4812SLPZ	48 (18-75)	12	8	710	2500	1000	88
AM30CW-4815SLPZ	48 (18-75)	15	8	710	2000	1500	88
AM30CW-4824SLPZ	48 (18-75)	24	8	710	1250	470	89

Input Specification

Parameters	Conditions	Typical	Maximum	Units
Voltage Types			4:1	
Filter	PI filter			
Absolute maximum rating	24Vin models, 1 sec.		-0.7~50	VDC
	48Vin models, 1 sec.		-0.7~100	VDC
Input reflected current	24Vin models	100		mA
	48Vin models	40		mA
Input Under Voltage turn off	24Vin models	5.5~7.5		VDC
	48Vin models	12~15.5		VDC
Startup Voltage	24Vin models		9	VDC
	48Vin models		18	VDC
Remote On/Off control	ON - open or pulled high (3.5 - 12 VDC) OFF - pulled low to GND (0 - 1.2 VDC), idle current 7mA max.			

Isolation Specification

Parameters	Conditions	Typical	Maximum	Units
Tested isolation voltage	Input / output 60 sec, ≤ 1mA	1500		VDC
Resistance	500VDC	≥1000		MΩ
Capacitance	Input / output, 100KHz/0.1V	2000		pF

Output Specification

Parameters	Conditions	Typical	Maximum	Units
Voltage Tolerance	5% to 100% load	±1	±3	%
Line regulation	Full load, LL to HL	±0.2	±0.5	%
Load regulation	5% to 100% load	±0.5	±1	%
Voltage adjustment			±10	%
Transient recovery time	25% load step change	250	500	µs
Transient recovery deviation	25% load step change	±3	±8	%

Ripple & Noise	20MHz bandwidth	100	200	mV pk-pk

General Specifications

Parameters	Conditions	Minimum	Typical	Maximum	Units
Switching frequency	100% load		330		KHz
Over Current protection	Input voltage range	110	150		%Io
Over voltage protection	Input voltage range	110	140		%Vo
Short circuit protection	Continuous, Auto recovery				
Operating temperature	With derating	-40		85	°C
Storage temperature		-55		125	°C
Temperature coefficient	100% Load			± 0.02	%/ °C
Maximum soldering temperature	1.5mm from case for 10 sec.			300	°C
Cooling	Free air convection				
Humidity	Non-condensing	5		95	% RH
Case material	Aluminum alloy				
Weight			21		g
Dimensions (L x W x H)	1.00 x 1.00 x 0.47 inches (25.40 × 25.40 × 12.00 mm)				
MTBF	> 1 000 000 hrs (MIL-HDBK -217F, t=+25°C)				

NOTE: All specifications in this datasheet are measured at an ambient temperature of 25°C, humidity<75%, nominal input voltage and at rated output load unless otherwise specified.

Safety Specifications

Parameters		
Standards	Designed to meet IEC/UL/EN62368-1	
	EMI - Conducted and radiated emission	CISPR32/EN55032, Class B
	Electrostatic Discharge Immunity	IEC/EN 61000-4-2
	RF, Electromagnetic Field Immunity	IEC/EN 61000-4-3
	Electrical Fast Transient/Burst Immunity	IEC/EN 61000-4-4
	Surge Immunity	IEC/EN 61000-4-5
	RF, Conducted Disturbance Immunity	IEC/EN 61000-4-6
	Vibration	IEC/EN61373, category 1/grade B

Derating

24Vin, 3.3/5Vout models

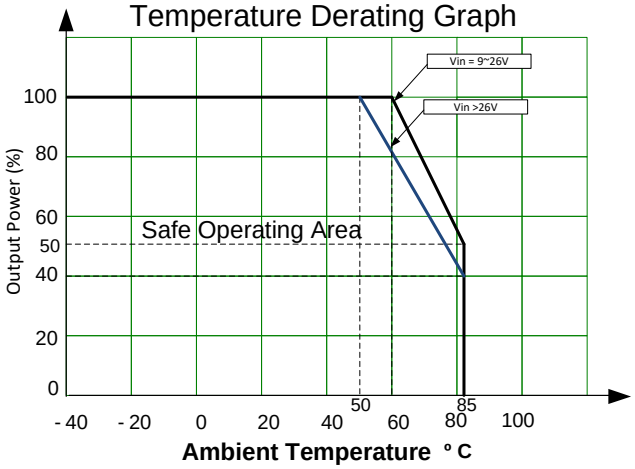

24Vin, 12/15/24Vout models

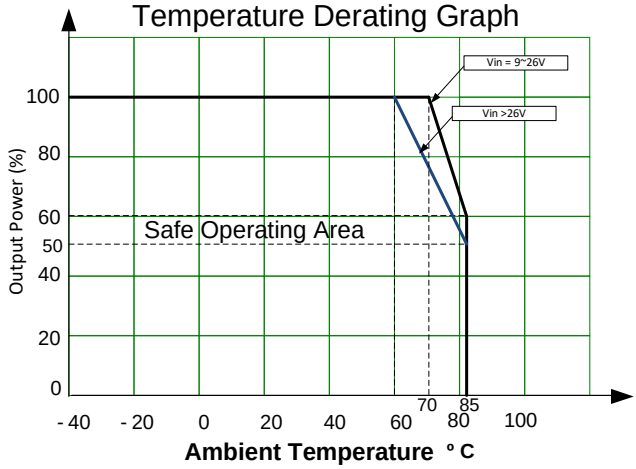

48Vin, 3.3/5Vout models

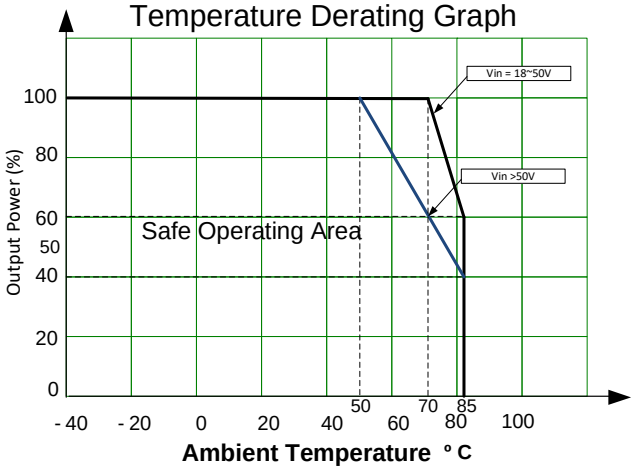

48Vin, 12/15/24Vout models

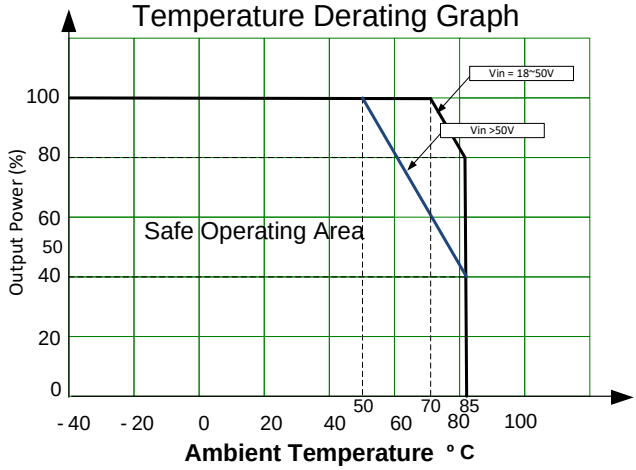

24Vin models

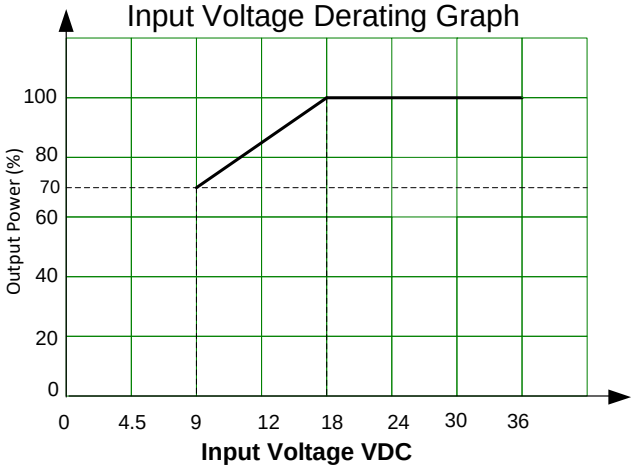

48Vin models

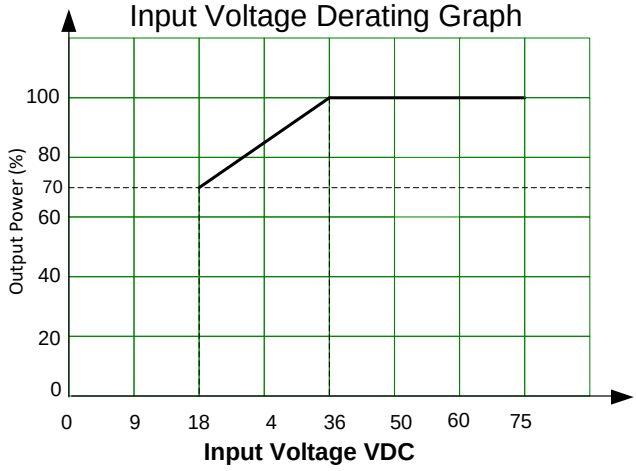

Typical Application Circuit

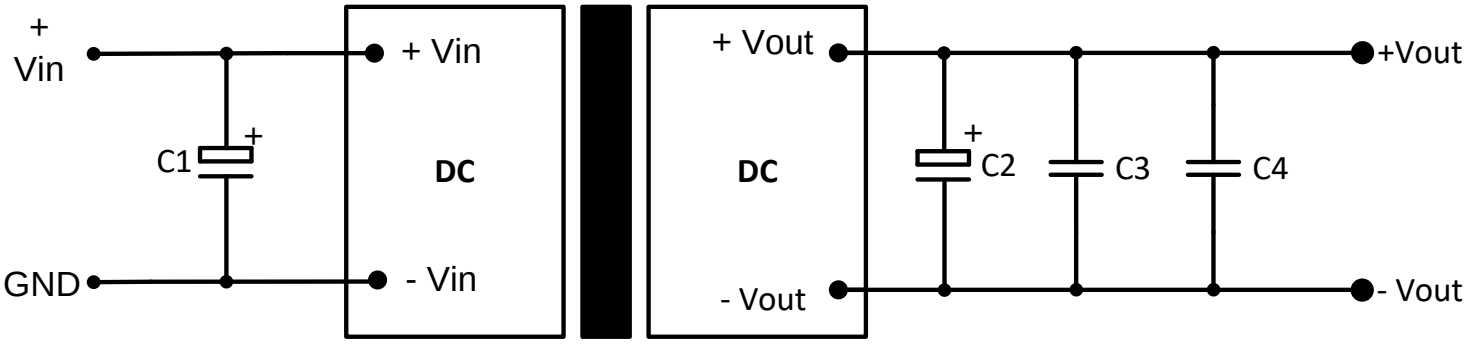

Vin	C1	C2	C3	C4
24VDC	100µF	470µF	10µF	0.1µF
48VDC	100µF	470µF	22µF	10µF

Trimming

Output voltage can be externally trimmed by utilizing the methods as shown below

Fixed Resistor **Variable Potentiometer**

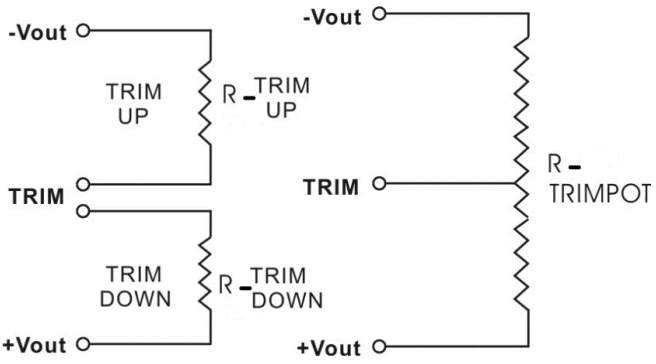

Leave open if not used.

3.3V Output

Trim down %	1	2	3	4	5	6	7	8	9	10
Vout (VDC)	3.267	3.234	3.201	3.168	3.135	3.102	3.069	3.036	3.003	2.970
Rt down (KΩ)	1121.642	378.474	220.234	151.369	112.834	88.207	71.111	58.549	48.928	41.324
Trim up %	1	2	3	4	5	6	7	8	9	10
Vout (VDC)	3.333	3.366	3.399	3.432	3.465	3.498	3.531	3.564	3.597	3.630
Rt up (KΩ)	243.933	139.191	95.012	70.649	55.211	44.554	36.755	30.799	26.103	22.305

5V Output

Trim down %	1	2	3	4	5	6	7	8	9	10
Vout (VDC)	4.950	4.900	4.850	4.800	4.750	4.700	4.680	4.600	4.550	4.500
Rt down (KΩ)	36.242	18.716	9.546	3.907	0.089	--	--	--	--	--
Trim up %	1	2	3	4	5	6	7	8	9	10
Vout (VDC)	5.060	5.100	5.150	5.200	5.250	5.300	5.350	5.400	5.450	5.500
Rt up (KΩ)	21957.654	131.637	49.119	25.428	14.188	7.626	3.324	0.287	--	--

12V Output

Trim down %	1	2	3	4	5	6	7	8	9	10
Vout (VDC)	11.880	11.760	11.640	11.520	11.400	11.280	11.160	11.040	10.920	10.800
Rt down (KΩ)	522.185	269.246	175.390	126.441	96.391	76.066	61.403	50.325	41.660	34.698
Trim up %	1	2	3	4	5	6	7	8	9	10
Vout (VDC)	12.120	12.240	12.360	12.480	12.600	12.720	12.840	12.960	13.080	13.200
Rt up (KΩ)	187.313	72.848	39.563	23.705	14.426	8.337	4.033	0.830	--	--

15V Output

Trim down %	1	2	3	4	5	6	7	8	9	10
Vout (VDC)	14.850	14.700	14.550	14.400	14.250	14.100	13.950	13.800	13.650	13.500
Rt down (KΩ)	675.367	382.496	260.958	194.429	152.455	123.560	102.455	86.363	73.689	63.447
Trim up %	1	2	3	4	5	6	7	8	9	10
Vout (VDC)	15.150	15.300	15.450	15.600	15.750	15.900	16.050	16.200	16.350	16.500
Rt up (KΩ)	323.076	105.467	56.466	34.831	22.640	14.818	9.373	5.365	2.291	--

24V Output

Trim down %	1	2	3	4	5	6	7	8	9	10
Vout (VDC)	23.760	23.520	23.280	23.040	22.800	22.560	22.320	22.080	21.840	21.600
Rt down (KΩ)	635.592	358.741	246.163	185.102	146.779	120.487	101.330	86.750	75.282	66.025
Trim up %	1	2	3	4	5	6	7	8	9	10
Vout (VDC)	24.240	24.480	24.720	24.960	25.200	25.440	25.680	25.920	26.160	26.400
Rt up (KΩ)	154.790	53.216	28.902	17.987	11.787	7.790	4.999	2.939	1.357	0.104

Dimensions

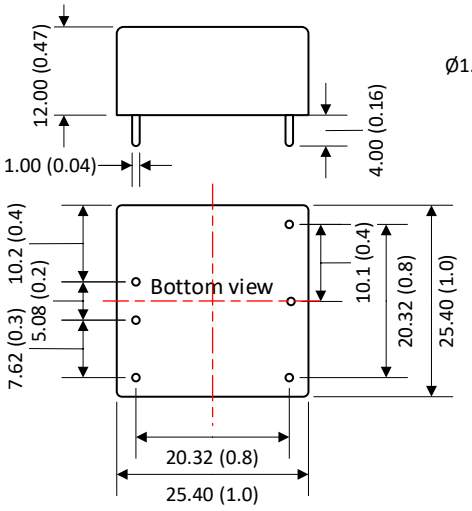

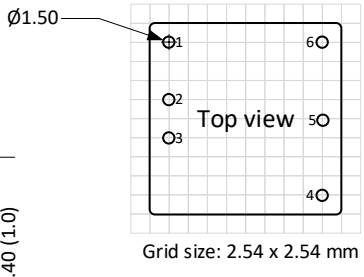

Note:
Unit: mm (inch)
Pin tolerance: ±0.10 (0.004)
General tolerance: ±0.5 (0.02)

Pin Out Specifications		
Pin	Single	Dual
1	Remote On/Off	Remote On/Off
2	-V Input	-V Input
3	+V Input	+V Input
4	+V Output	+V Output
5	Trim	Com
6	-V Output	-V Output

NOTE: 1. Datasheets are updated as needed and as such, specifications are subject to change without notice. Once printed or downloaded, datasheets are no longer controlled by Aimtec; refer to www.aimtec.com for the most current product specifications. **2.** Product labels shown, including safety agency certifications on labels, may vary based on the date manufactured. **3.** Mechanical drawings and specifications are for reference only. **4.** All specifications are measured at an ambient temperature of 25°C, humidity<75%, nominal input voltage and at rated output load unless otherwise specified. **5.** Aimtec may not have conducted destructive testing or chemical analysis on all internal components and chemicals at the time of publishing this document. CAS numbers and other limited information are considered proprietary and may not be available for release. **6.** This product is not designed for use in critical life support systems, equipment used in hazardous environments, nuclear control systems or other such applications which necessitate specific safety and regulatory standards other the ones listed in this datasheet. **7.** Warranty is in accordance with Aimtec's standard Terms of Sale available at www.aimtec.com.