aimtec
Your Power Partner

Series AM30K-Z

30 Watt | DC-DC Converter



FEATURES:

- Wide Input 2:1 Range
- Full SMD Technology
- 1500 VDC Isolation
- Efficiency up to 91%
- Adjustable Output Voltage
- Remote ON/OFF Function
- Over Current, Voltage, & Temperature Protection
- Soft Start

RoHS CE

Models: Single output

Model	Input – Voltage (V)	Output Voltage (V)	Output Current max (A)	Isolation (VDC)	Max Capacitive Load (uF)	Efficiency (%)
AM30K-1203SZ	9-18	3.3	5.5	1500	15000	83
AM30K-1205SZ	9-18	5	5.0	1500	10000	86
AM30K-1212SZ	9-18	12	2.5	1500	2200	90
AM30K-1215SZ	9-18	15	2.0	1500	1000	90
AM30K-2403SZ	18-36	3.3	5.5	1500	15000	84
AM30K-2405SZ	18-36	5	5.0	1500	10000	87
AM30K-2412SZ	18-36	12	2.5	1500	2200	91
AM30K-2415SZ	18-36	15	2.0	1500	1000	91
AM30K-4803SZ	36-75	3.3	5.5	1500	15000	84
AM30K-4805SZ	36-75	5	5.0	1500	10000	87
AM30K-4812SZ	36-75	12	2.5	1500	2200	91
AM30K-4815SZ	36-75	15	2.0	1500	1000	91

Add suffix “-K” for optional heat sink

Models: Dual output

Model	Input – Voltage (V)	Output Voltage (V)	Output Current max (A)	Isolation (VDC)	Max Capacitive Load (uF)	Efficiency (%)
AM30K-1212DZ	9-18	±12	±1.25	1500	±1000	90
AM30K-1215DZ	9-18	±15	±1.0	1500	±680	90
AM30K-2412DZ	18-36	±12	±1.25	1500	±1000	91
AM30K-2415DZ	18-36	±15	±1.0	1500	±680	91
AM30K-4812DZ	36-75	±12	±1.25	1500	±1000	90
AM30K-4815DZ	36-75	±15	±1.0	1500	±680	90

Add suffix “-K” for optional heat sink

NOTE: All specifications in this datasheet are measured at an ambient temperature of 25°C, humidity<75%, nominal input voltage and at rated output load unless otherwise specified.

Input Specifications

Input Specifications	Nominal	Typical	Maximum	Units
Voltage range	12	9-18		VDC
	24	18-36		VDC
	48	36-75		VDC
Filter	π(Pi) Network			
Start up time		20		ms
Absolute Maximum Rated Input Voltage	12		25	VDC
	24		50	VDC
	48		100	VDC
Peak Input Voltage time			100	ms
Under voltage lockout	12 ON/OFF	8.6/7.9		VDC
	24 ON/OFF	17.6/16		VDC
	48 ON/OFF	33.5/30.5		VDC
Input Reflected Ripple Current *		20		mA p-p
On/Off Control	ON – high or open (2.5V TO 5.5V); OFF – low (-0.7V to 0.8V or short circuit between pin 2 & 3), idle current: 2.5mA typ.			

* The input reflected ripple current should be measured with connected 12µH inductor.

Isolation Specifications

Parameters	Conditions	Typical	Rated	Units
Tested I/O voltage	60 sec		1500	VDC
Resistance		1000		MOhm
Capacitance		1200		pF

Output Specifications

Output Specifications	Conditions	Typical	Maximum	Units
Voltage accuracy		±1		%
Voltage balance	Dual Output model, balanced load	±5		%
Over voltage protection	3.3Vout, Zener diode clamp	3.9		VDC
	5Vout, Zener diode clamp	6.2		VDC
	12Vout, Zener diode clamp	15		VDC
	15Vout, Zener diode clamp	18		VDC
	±12Vout, Zener diode clamp	±15		VDC
	±15Vout, Zener diode clamp	±18		VDC
Over current protection		120		%
Short Circuit protection	Continuous			
Short circuit restart	Auto Recovery			
Line voltage regulation	HL-LL		±0.5	%
Load voltage regulation**	10% to 100% Load		±0.5	%
Temperature coefficient		±0.02		%/°C
Ripple & Noise*	At 20MHz Bandwidth		75	m Vp-p
Voltage adjustment range		±10		%

* Measured with 1µF CC.
** Operating the converter below the 10% load will not damage the converter. However, some of the specifications may not be meet.

General Specifications

Input Specifications	Conditions	Typical	Maximum	Units
Switching frequency	100% load	270		KHz
Operating temperature	With derating above 60 °C (see graph below)	-40 to +85		°C
Storage temperature		-40 to +125		°C
Max Case temperature			100	°C
Derating	Without heatsink, 60 to 85°C	2.5		%/°C
	With heatsink, 70 to 85°C	3.33		%/°C
Cooling	Free air convection			
Humidity			95	%
Over Temperature Protection	On case	110		°C
Case material	Nickel-coated Copper and Epoxy (UL94V-0 rated)			
Weight		48		g
Dimensions (L X W X H)	2.00 x1.60 x0.40 inches 50.80 x 40.60 x 10.20 mm			
MTBF	>1 000 000 hrs Calculated using MIL-HDBK-217 F at +25 °C			

Safety Specifications

Standards	
Agency approvals	CE
Safety	IEC/EN 60950-1
	EN55022 Class A with the recommended circuit
	EN61000-4-2 Perf. Criteria A
	EN61000-4-3 Perf. Criteria A
	EN61000-4-4 Perf. Criteria A with the recommended circuit
	EN61000-4-5 Perf. Criteria A with the recommended circuit
	EN61000-4-6 Perf. Criteria A
	EN61000-4-8 Perf. Criteria A

Pin Out Specifications

Pin	Single	Dual
1	+Vin	+Vin
2	-Vin	-Vin
3	On/Off Control	On/Off Control
4	No Pin	+Vout
5	+Vout	Com
6	-Vout	-Vout
7	Trim	Trim

Dimensions

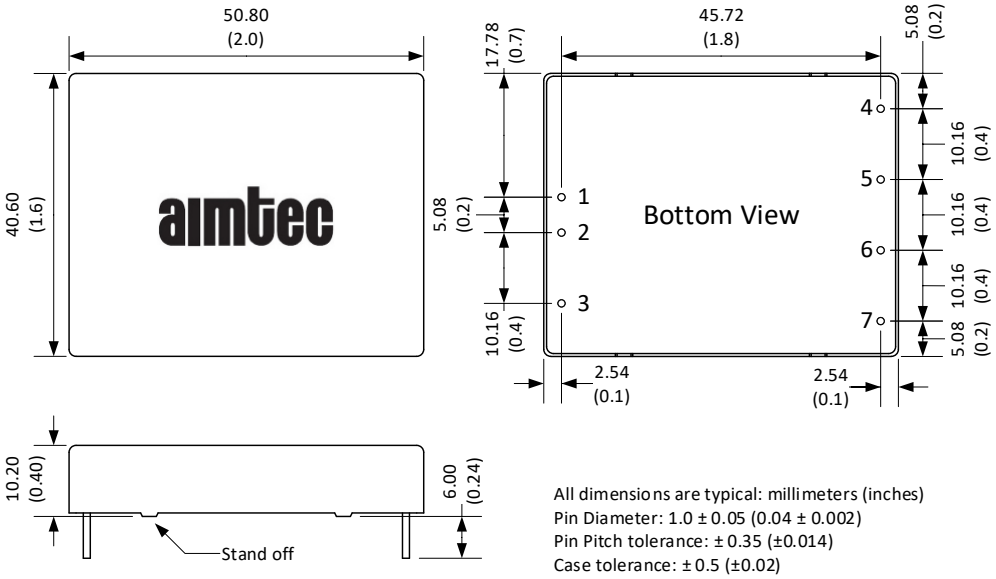

All dimensions are typical: millimeters (inches)
Pin Diameter: 1.0 ± 0.05 (0.04 ± 0.002)
Pin Pitch tolerance: ± 0.35 (±0.014)
Case tolerance: ± 0.5 (±0.02)

Dimensions with Optional Heat Sink

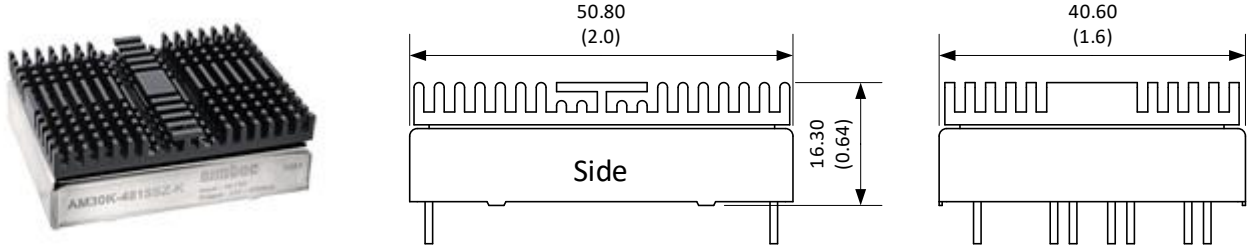

Notes: Add “-K” suffix for ordering, heat sink is affixed with thermally dissipative adhesive tape.
See derating graph for temperature performance. Heat sink material is anodized (black) aluminum, adds weight 17g to total mass (65g).

Triming

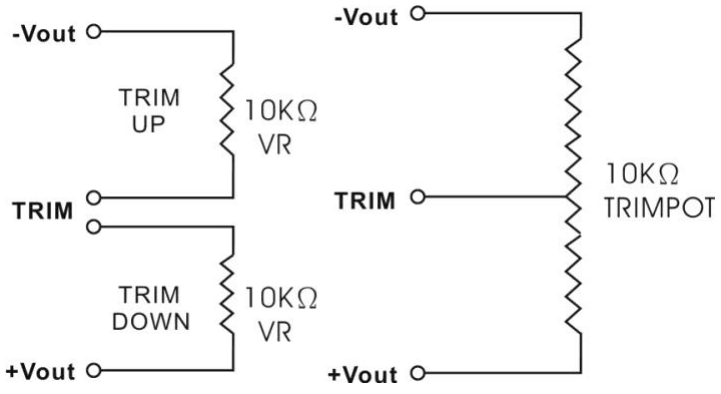

Derating

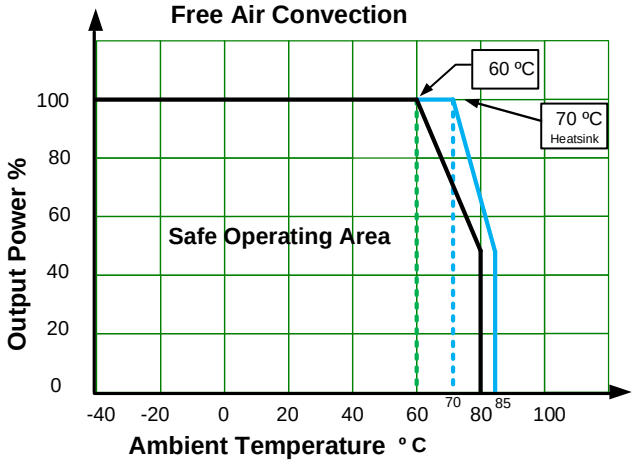

Extended temperature performance can be achieved with optional heat sink. (add suffix "–K" to part number)

Recommended Circuits

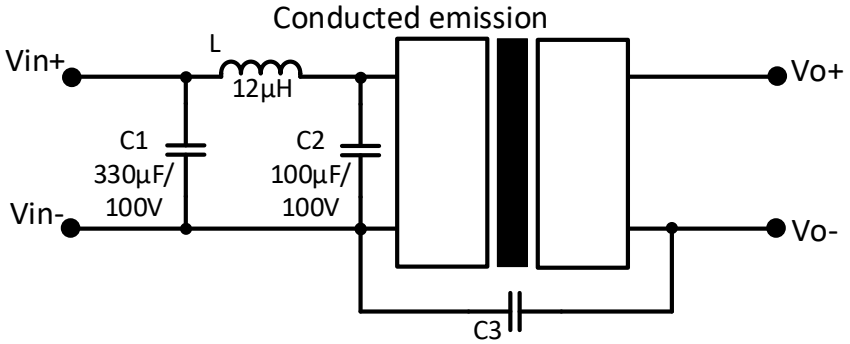

Models	C1	L	C2	C3
AM30K-12XXXZ	330 µf, 100V	12µH	100µ, 100V	N/A
AM30K-24XXXZ	330 µf, 100V	12µH	100µ, 100V	N/A
AM30K-48XXXZ	330 µf, 100V	12µH	100µ, 100V	1000pF, 2000V

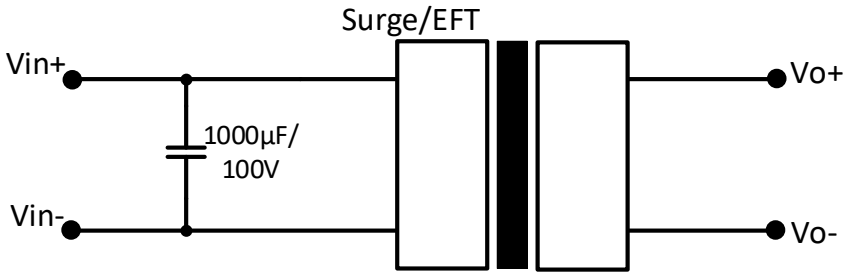

NOTE: 1. Datasheets are updated as needed and as such, specifications are subject to change without notice. Once printed or downloaded, datasheets are no longer controlled by Aimtec; refer to www.aimtec.com for the most current product specifications. **2.** Product labels shown, including safety agency certifications on labels, may vary based on the date manufactured. **3.** Mechanical drawings and specifications are for reference only. **4.** All specifications are measured at an ambient temperature of 25°C, humidity<75%, nominal input voltage and at rated output load unless otherwise specified. **5.** Aimtec may not have conducted destructive testing or chemical analysis on all internal components and chemicals at the time of publishing this document. CAS numbers and other limited information are considered proprietary and may not be available for release. **6.** This product is not designed for use in critical life support systems, equipment used in hazardous environments, nuclear control systems or other such applications which necessitate specific safety and regulatory standards other the ones listed in this datasheet. **7.** Warranty is in accordance with Aimtec's standard Terms of Sale available at www.aimtec.com.