Click to ORDER samples

AM3A-Z



SIP6 Package

Aimtec is pleased to introduce its first ever 3-Watt single and dual output DC/DC converter in a compact SIP6 package. With a 4:1 ultra-wide input range, from 4.5-75VDC, the AM3A-Z comes with 1600VDC isolation and a regulated output. This is the smallest regulated and isolated 3-Watt converter ever designed by Aimtec!

This compact design comes with a high efficiency up to 84%, no minimum load requirement and continuous short circuit protection. Furthermore, the ambient operating temperature is from -40°C to +76°C with full power up to 71°C.

This truly innovative series can be used for applications that have limited board space such as mobile phone chargers, portable electronics, IoT and wireless applications.

Features

- I/O Isolation 1600VDC
- Continuous Short circuit protection
- Operating Temp: -40 °C to +76 °C
- Compact Footprint and high-power Density
- 4:1 Input Voltage Range
- Compact SIP6
- ON/OFF Control
- Efficiency up to 84%

RoHS

3yr Warranty

Summary

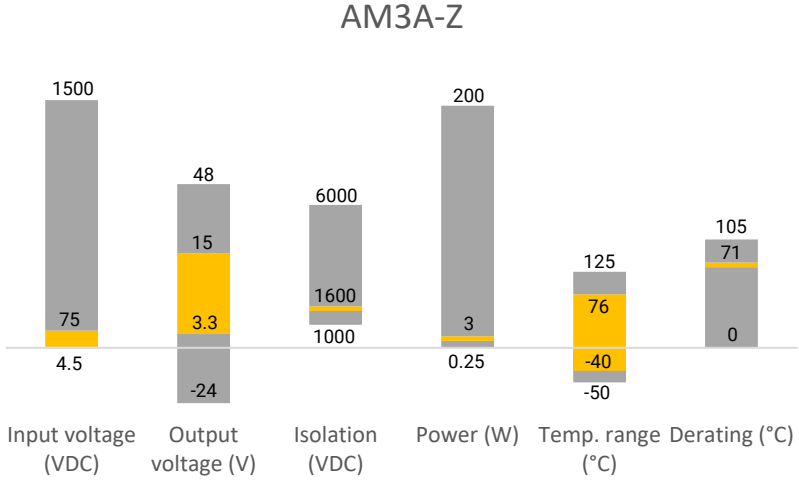

Training

The AM3A-Z



The First Dual Output 3 Watt SIP6 Design

Product Training Video (click to open)

Press Release

Coming Soon!

Application Notes

Applications



IoT | Industrial | Telecom | Portable Equipment

Models & Specifications

Single Output

Model	Input Voltage (VDC)	Output Voltage (VDC)	Input Current max (mA)	Output Current max (mA)	Isolation (VDC)	Maximum capacitive Load (µF)	Efficiency (%)
AM3A-1203SZ	12 (4.5 - 18)	3.3	257	700	1600	3300	75
AM3A-1205SZ	12 (4.5 - 18)	5	309	600	1600	1680	81
AM3A-1212SZ	12 (4.5 - 18)	12	301	250	1600	820	83
AM3A-1215SZ	12 (4.5 - 18)	15	301	200	1600	680	83
AM3A-2403SZ	24 (9 - 36)	3.3	127	700	1600	3300	76
AM3A-2405SZ	24 (9 - 36)	5	152	600	1600	1680	82
AM3A-2412SZ	24 (9 - 36)	12	149	250	1600	820	84
AM3A-2415SZ	24 (9 - 36)	15	149	200	1600	680	84
AM3A-4803SZ	48 (18 - 75)	3.3	65	700	1600	3300	74
AM3A-4805SZ	48 (18 - 75)	5	77	600	1600	1680	81
AM3A-4812SZ	48 (18 - 75)	12	77	250	1600	820	81
AM3A-4815SZ	48 (18 - 75)	15	76	200	1600	680	82

Dual Output

Model	Input Voltage (VDC)	Output Voltage (VDC)	Input Current max (mA)	Output Current max (mA)	Isolation (VAC)	Maximum capacitive Load (µF)	Efficiency (%)
AM3A-1205DZ	12 (4.5 - 18)	±5	313	±300	1600	±1000	80
AM3A-1212DZ	12 (4.5 - 18)	±12	305	±125	1600	±470	82
AM3A-1215DZ	12 (4.5 - 18)	±15	301	±100	1600	±330	83
AM3A-2405DZ	24 (9 - 36)	±5	154	±300	1600	±1000	81
AM3A-2412DZ	24 (9 - 36)	±12	151	±125	1600	±470	83
AM3A-2415DZ	24 (9 - 36)	±15	149	±100	1600	±330	84
AM3A-4805DZ	48 (18 - 75)	±5	79	±300	1600	±1000	79
AM3A-4812DZ	48 (18 - 75)	±12	78	±125	1600	±470	80
AM3A-4815DZ	48 (18 - 75)	±15	78	±100	1600	±330	80

Input Specification

Parameters	Conditions	Typical	Maximum	Units
Voltage range	12V 24V 48V	4.5 – 18 9 – 36 18 - 75		VDC
Filter	Capacitor			

Startup time	Nominal input and resistive load	0.03		S
Absolute maximum rating	12V models 24V models 48V models		25 50 100	VDC
Input reflected ripple current			20	mA pk-pk
On/Off Control	ON – high impedance or open; OFF – 2-4mA input current through 1KΩ (standby 2.5mA max)			

Isolation Specification

Parameters	Conditions	Typical	Maximum	Units
Tested I/O voltage	60 sec	1600		VDC
Resistance		>1000		MOhm
Capacitance			40	pF

Output Specification

Parameters	Conditions		Typical	Maximum	Units
Voltage accuracy			±1		%
Cross regulation (Dual)	25% load on one output, 100% load on second output		±5		%
Line regulation	Full load, main input range			±0.2	%
Load regulation	0-100% load			±1	%
Short circuit protection	Continuous, Auto recovery				
Temperature coefficient			±0.02		%/ °C
Ripple & Noise*	Single Output			150	mV pk-pk
	Dual Output			100	
Transient recovery time	100%-25% load, 25% load step change		500		uS
Transient response deviation	100%-25% load, 25% load step change	Single 3.3V,5V out		±5	%
		Others		±3	

* 20MHz bandwidth with a 0.1uF CC and a 10uF EC

General Specifications

Parameters	Conditions	Typical	Maximum	Units
Switching frequency	Full load	100		KHz
Operating temperature	With derating at 71	-40 to +76		°C
Storage temperature		-55 to +125		°C
Maximum Case temperature			100	°C
Cooling	Free air convection			
Humidity	Non-condensing		95	% RH
Case material	Black plastic (flammability to UL 94V-0)			
Weight		3.85		g
Dimensions (L x W x H)	0.69 x 0.40 x 0.48 inches 17.52 x 10.02 x 12.20 mm			
MTBF	>956,000 hrs (MIL-HDBK -217F, t=+25°C) / Full Load			

NOTE: All specifications in this datasheet are measured at an ambient temperature of 25°C, humidity<75%, nominal input voltage and at rated output load unless otherwise specified.

Safety Specifications		
Parameters		
Agency approval	cULus	UL62368-1
Standards	Information technology Equipment	Design to meet EN62368
	EMI - Conducted and radiated emission	EN55032, class B with the EMC recommended circuit part A
	Electrostatic Discharge Immunity	IEC 61000-4-2, Contact ±6KV, Criteria A
	RF, Electromagnetic Field Immunity	IEC 61000-4-3, 10V/m, Criteria A
	Electrical Fast Transient/Burst Immunity	IEC 61000-4-4, ±2KV, Criteria B with the EMC recommended circuit part A
	Surge Immunity	IEC 61000-4-5, L-L ±2KV, Criteria B with the EMC recommended circuit part A
	RF, Conducted Disturbance Immunity	IEC 61000-4-6, 10Vr.m.s, Criteria A
	PFMF, Power Frequency Magnetic Field Immunity	IEC 61000-4-8 100A/m, Criteria A

Derating

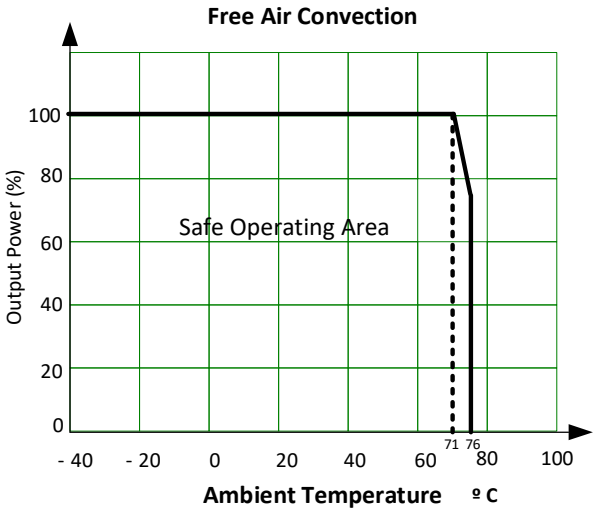

On/Off Contorl Circuit

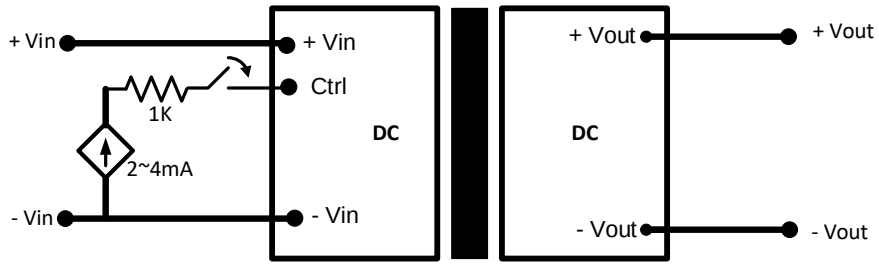

EMC Recommended Circuit

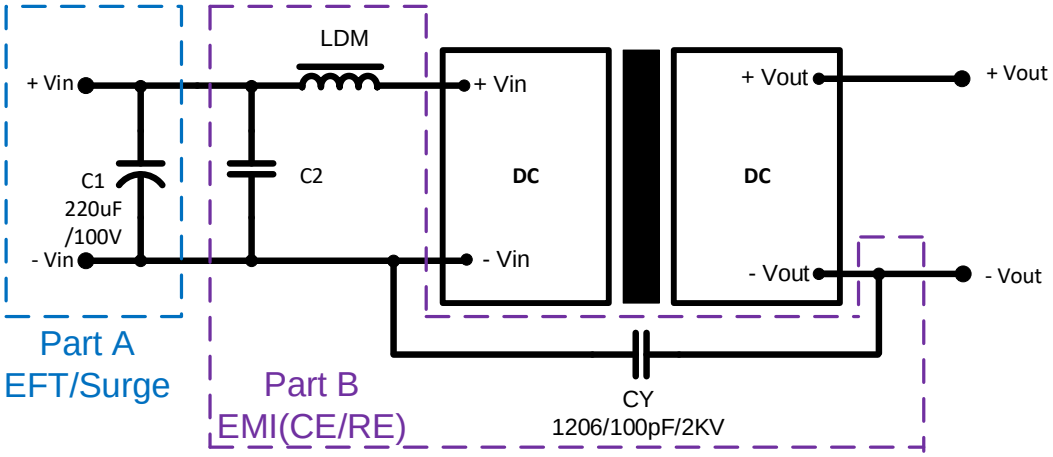

Vin	C2	LDM
12V	1210, 10μF/35V	2.2μH
24V	1210,2.2μF/100V	10μH
48V	1210,4.7μF/100V	18μH

Pin Out Specifications

Pin	Single	Dual
1	-Input	-Input
2	+Input	+Input
3	ON/OFF ctrl	No pin
4	No pin	+V Output
5	+V Output	Common
6	-V Output	-V Output

Dimensions

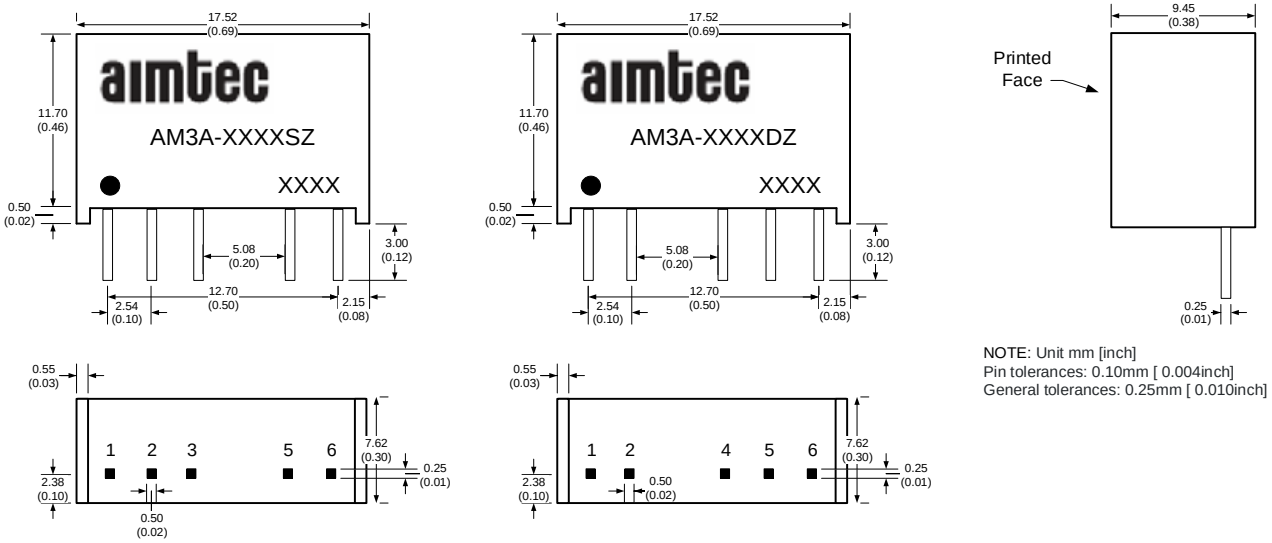

NOTE: 1. Datasheets are updated as needed and as such, specifications are subject to change without notice. Once printed or downloaded, datasheets are no longer controlled by Aimtec; refer to www.aimtec.com for the most current product specifications. **2.** Product labels shown, including safety agency certifications on labels, may vary based on the date manufactured. **3.** Mechanical drawings and specifications are for reference only. **4.** All specifications are measured at an ambient temperature of 25°C, humidity<75%, nominal input voltage and at rated output load unless otherwise specified. **5.** Aimtec may not have conducted destructive testing or chemical analysis on all internal components and chemicals at the time of publishing this document. CAS numbers and other limited information are considered proprietary and may not be available for release. **6.** This product is not designed for use in critical life support systems, equipment used in hazardous environments, nuclear control systems or other such applications which necessitate specific safety and regulatory standards other the ones listed in this datasheet. **7.** Warranty is in accordance with Aimtec's standard Terms of Sale available at www.aimtec.com.