Series AM3DG-NZ

3 Watt | DC-DC Converter

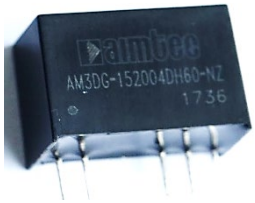

FEATURES:

- I/O Isolation of 3000VAC or 3500VAC/6000VDC
- Maximum Capacitive load up to 1000µF
- Operating temperature: -40 to +105°C
- Efficiency up to 83%
- SIP7 Package
- Ultra-low Isolation capacitance

RoHS

Models

Dual output

Model	Input Voltage (V)	Input current FL|NL (mA)	Output Voltage (V)	Output Current max (mA)	Max Capacitive Load (uF)	Efficiency (%)
AM3DG-121508DH30-NZ	11.4 – 12.6	280|40	+15 (14.25 ~ 15.75) / -8 (-6.4 ~ -9.6)	+120 / -120	1000	81
AM3DG-151508DH30-NZ	14.25 – 15.75	230|35				
AM3DG-241508DH30-NZ	22.8 – 25.2	144|30				
AM3DG-151504DH60-NZ*	13.5 – 16.5	151|15	+15 / -4	+100 / -100	220	82
AM3DG-151803DH60-NZ*	13.5 – 16.5	177|16	+18 / -3	+100 / -100	220	79
AM3DG-152004DH60-NZ*	13.5 – 16.5	196|16	+20 / -4	+100 / -100	220	83

NOTE: All specifications in this datasheet are measured at an ambient temperature of 25°C, humidity<75%, nominal input voltage and at rated output load unless otherwise specified.

Input Specifications

Parameters	Nominal	Typical	Maximum	Units
Voltage range	See model's table			
Filter	Capacitor			
Absolute Maximum Rating	AM3DG-121508DH30-NZ		-0.7 - 14	VDC
	AM3DG-151508DH30-NZ		-0.7 - 16	
	AM3DG-241508DH30-NZ		-0.7 - 26	
	AM3DG-151504DH60-NZ		-0.7 - 21	
	AM3DG-151803DH60-NZ		-0.7 - 21	
	AM3DG-152004DH60-NZ		-0.7 - 21	
Peak Input Voltage time			100	ms

Isolation Specifications

Parameters	Conditions		Typical	Rated	Units
Tested I/O voltage	AM3DG-151504DH60-NZ AM3DG-151803DH60-NZ AM3DG-152004DH60-NZ	60sec, <1mA		3500/6000	VAC/VDC
	other models			3000	VAC
Resistance	I/O Isolation 500VDC		>1000		MOhm
Capacitance	AM3DG-151504DH60-NZ AM3DG-151803DH60-NZ AM3DG-152004DH60-NZ	100KHz/0.1V	3.5		pF
	other models	100KHz/0.1V	6		

Output Specifications

Parameters	Conditions		Typical	Maximum	Units
Voltage accuracy	AM3DG-151504DH60-NZ	Light load (+Vout / -Vout)	+6 / +10	+10 / +18	%
	AM3DG-151803DH60-NZ		+4 / +12	+9 / +20	
	AM3DG-152004DH60-NZ		+4 / +10	+6 / +15	
	AM3DG-151504DH60-NZ	Full load (+Vout / -Vout)	0 / 0	+2 / +5	%
	AM3DG-151803DH60-NZ		-3 / 0	+2 / +7	
	AM3DG-152004DH60-NZ		-1.5 / +0.5	+1 / +5.5	
	Others		See tolerance curve		

Short Circuit protection	AM3DG-151504DH60-NZ AM3DG-151803DH60-NZ AM3DG-152004DH60-NZ		Continuous, auto restart		
	Others			1	s
Line voltage regulation	AM3DG-151504DH60-NZ, HL-LL AM3DG-151803DH60-NZ, HL-LL AM3DG-152004DH60-NZ, HL-LL		±1.1	±1.3	%
	Others, HL-LL, +15 Vout			±5	
	Others, HL-LL, -8 Vout			±20	
Load voltage regulation	AM3DG-151504DH60-NZ AM3DG-151803DH60-NZ AM3DG-152004DH60-NZ	10 – 100% load, +Vout	5 7 6	8 9 10	%
	AM3DG-151504DH60-NZ AM3DG-151803DH60-NZ AM3DG-152004DH60-NZ	10 – 100% load, -Vout	10 10 12	13 15 20	%
	10 – 100% load: 20Vdc output			±15	%
Temperature coefficient	Full load			±0.03	%/°C
Ripple & Noise	AM3DG-151504DH60-NZ	20MHz Bandwidth	100		mV p-p
	AM3DG-151803DH60-NZ AM3DG-152004DH60-NZ	20MHz Bandwidth		75	
	Others, 20MHz Bandwidth		100	200	

General Specifications

Parameters	Conditions		Typical	Maximum	Units
Switching frequency	AM3DG-151803DH60-NZ AM3DG-152004DH60-NZ	100% load	95		KHz
	Others, 100% load		100		
Operating temperature	Derating above 85°C		-40 to +105		°C
Storage temperature	AM3DG-151504DH60-NZ		-40 to +105		°C
	Others		-55 to +125		
Case temperature rise	AM3DG-151504DH60-NZ AM3DG-151803DH60-NZ AM3DG-152004DH60-NZ	Ta=25°C		30	°C
	Others, Ta=25°C			40	
Cooling	Free air convection				
Humidity				95	% RH
Case material	Non-conductive black plastic (UL94V-0 rated)				
Weight	4.3				g
Dimensions (L x W x H)	0.77 x 0.39 x 0.49 inches 19.50 x 9.80 x 12.50 mm				
MTBF	>3,500,000hrs (MIL-HDBK -217F, Ground Benign, t=+25 °C)				
Maximum soldering temperature	1.5 mm from case for 10sec			300	°C

Safety Specifications

Parameters		
Standards	Designed to meet UL 60950-1 (AM3DG-152004DH60-NZ only)	
	CISPR32/EN 55032 Class B for 6000Vdc(3500VAC) models (see recommended circuit)	
	Electrostatic Discharge Immunity	IEC/EN 61000-4-2, Perf. Criteria B (Contact +/- 6KV for 3500VAC isolation models) (Contact +/- 8KV for 3000VAC isolation models)
	Electrical Fast Transient / Burst Immunity	IEC 61000-4-4, Perf. Criteria B (EFT +/- 2KV), for 3000VAC isolated models only
	Surge Immunity	IEC 61000-4-5, Perf. Criteria B (Surge Input to Output +/- 2KV), for 3000VAC isolated models

Pin Out Specifications

Pin	Dual
1	+ V Input
2	- V Input
5	- V Output
6	Common
7	+ V Output

* N.C. Not Connected

Dimensions

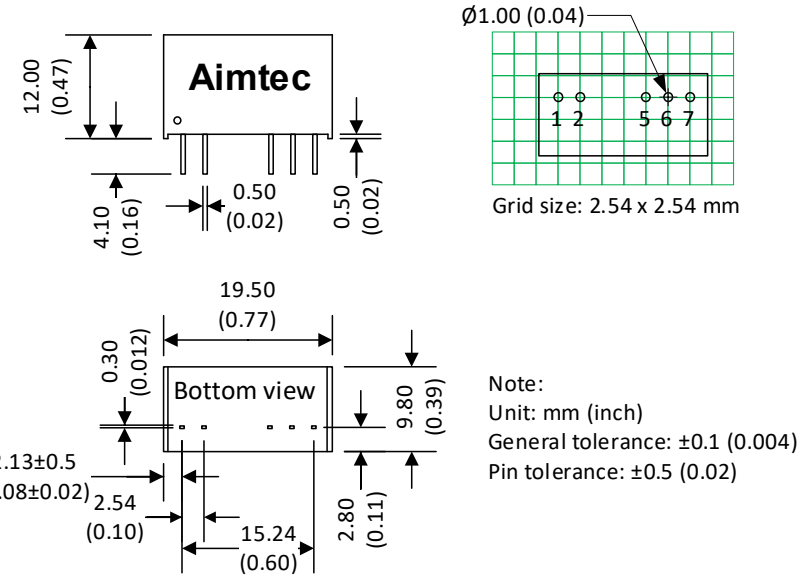

Note:
Unit: mm (inch)
General tolerance: ±0.1 (0.004)
Pin tolerance: ±0.5 (0.02)

Derating

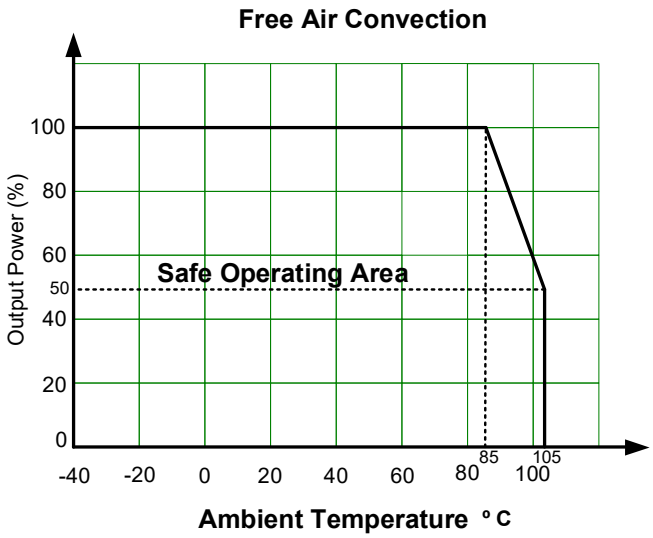

Application Circuit

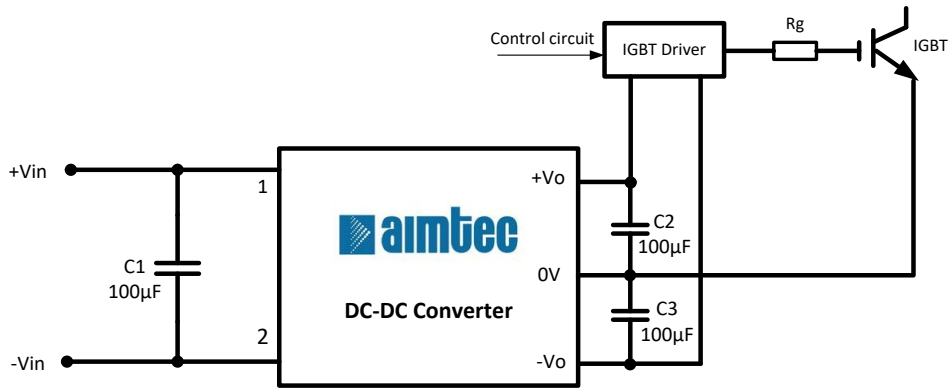

Note: Low Internal resistance capacitors suggested

EMI Recommended Circuit (Class B for 3500VAC isolation models only)

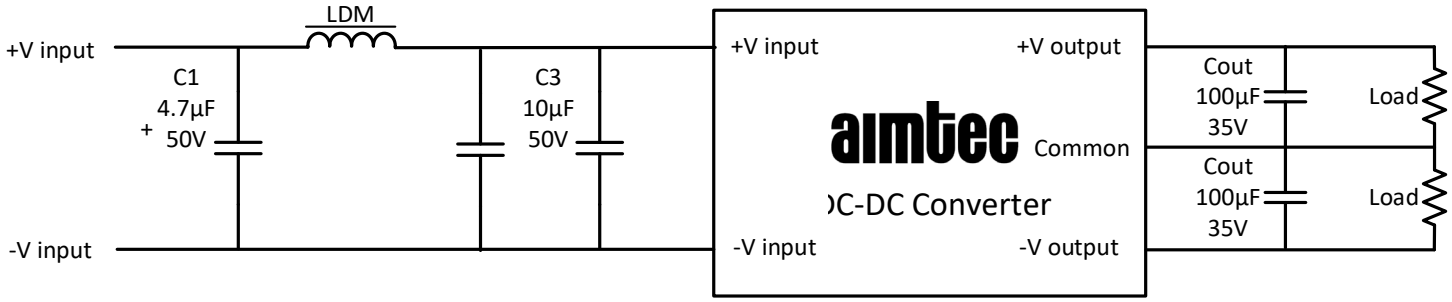

NOTE: 1. Datasheets are updated as needed and as such, specifications are subject to change without notice. Once printed or downloaded, datasheets are no longer controlled by Aimtec; refer to www.aimtec.com for the most current product specifications. **2.** Product labels shown, including safety agency certifications on labels, may vary based on the date manufactured. **3.** Mechanical drawings and specifications are for reference only. **4**. All specifications are measured at an ambient temperature of 25°C, humidity<75%, nominal input voltage and at rated output load unless otherwise specified. **5.** Aimtec may not have conducted destructive testing or chemical analysis on all internal components and chemicals at the time of publishing this document. CAS numbers and other limited information are considered proprietary and may not be available for release. **6.** This product is not designed for use in critical life support systems, equipment used in hazardous environments, nuclear control systems or other such applications which necessitate specific safety and regulatory standards other the ones listed in this datasheet. **7.** Warranty is in accordance with Aimtec's standard Terms of Sale available at www.aimtec.com.