Click to ORDER samples

AM3DG-LPZ



SIP7

The new AM3DG-LPZ is an ultra-wide input DC/DC converter that has a dual isolated output channel, which leads to improved reliability and performance. This series will offer many benefits to your design if it requires several voltage supply rails being supplied by one component.

This series offers great operating temperatures, from -40°C to +105°C with full power up to 85°C. It also features an isolation of 4000VAC for improved reliability and system safety. Furthermore, a high MTBF of 3,500,000h, output short circuit protection (OSCP) come standard.

The AM3DG-LPZ is suitable for distributed power supply systems, industrial controls, power grid, instruments and communications applications.

Features

- Operating Temp: -40 °C to +105 °C
- High isolation voltage: 4000VAC
- Low ripple & noise, 100mV (p-p), typ.
- SIP7 package
- Output short circuit protection

RoHS

3yr Warranty

CE

Summary

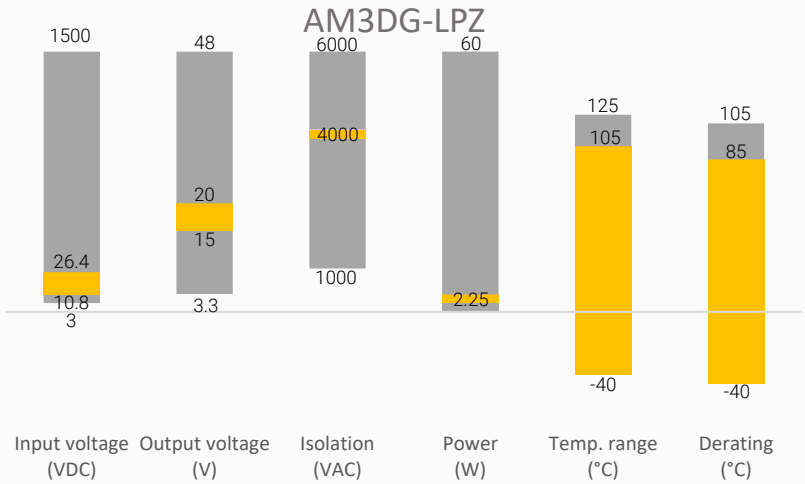

Training



Product Training Video (click to open)

Press Release

Coming Soon!

Application Notes

Applications

Power Grid

Industrial

Telecom

Instrumentation

Models & Specifications

Dual Output

Model	Input Voltage (VDC)	Output Voltage (VDC)		Output Current Max (mA)		Maximum Capacitive Load (µF)	Efficiency (%) Full Load Typ.
		Vo1	Vo2	Io1	Io2		
AM3DG-12153.5DH40LPZ	12 (10.8-13.2)	15	-3.5	111	-111	220	80
AM3DG-122004DH40LPZ	12 (10.8-13.2)	20	-4	100	-100	220	80
AM3DG-122005DH40LPZ	12 (10.8-13.2)	20	-5	100	-100	220	80
AM3DG-15152.5DH40LPZ	15 (13.5-16.5)	15	-2.5	100	-100	220	80
AM3DG-151504DH40LPZ	15 (13.5-16.5)	15	-4	100	-100	220	80
AM3DG-151508DH40LPZ	15 (13.5-16.5)	15	-8	120	-120	220	80
AM3DG-15158.7DH40LPZ	15 (13.5-16.5)	15	-8.7	100	-100	220	80
AM3DG-151803DH40LPZ	15 (13.5-16.5)	18	-3	100	-100	220	80
AM3DG-152004DH40LPZ	15 (13.5-16.5)	20	-4	100	-100	220	80
AM3DG-152005DH40LPZ	15 (13.5-16.5)	20	-5	100	-100	220	80
AM3DG-241504DH40LPZ	24 (21.6-26.4)	15	-4	100	-100	220	80
AM3DG-242004DH40LPZ	24 (21.6-26.4)	20	-4	100	-100	220	80

Input Specification

Parameters	Conditions	Typical	Maximum	Units
Absolute maximum rating	1s max.	> -0.7	30	VDC
Filter	Capacitor			

Isolation Specification

Parameters	Conditions	Typical	Maximum	Units
Tested isolation voltage	Input / output, 60 sec, ≤ 1mA	≥ 4000		VAC
Resistance	500VDC	≥ 1000		MΩ
Capacitance	100kHz/ 0.1V	3.5		pF
Creepage & clearance distance		>5		mm

Output Specification

Parameters	Conditions	Typical	Maximum	Units
Voltage accuracy	10% -100% load, See Typical Characteristic			
Line regulation	For Vin change of ±1%		± 1.2	%
Load regulation	10% - 100%, Vo1/Vo2	5/10	12/20	%
Short circuit protection	Continuous, Auto recovery			
Ripple & Noise	20MHz bandwidth, 10%-100% load	100	150	mV pk-pk

General Specifications

Parameters	Conditions	Typical	Maximum	Units
Switching frequency	100% Load	100		KHz
Operating temperature	With derating at 85°C	-40 to +105		°C
Storage temperature		-55 to +125		°C

Soldering temperature	1.5mm distance ≤ 10s		300	°C
Case temperature rise	100% Load	25		°C
Temperature coefficient	100% Load	± 0.02	± 0.03	%/ °C
Cooling	Free air convection			
Humidity	Non-condensing		95	% RH
Case material	Heat resistant black Plastic (flammability to UL 94V-0)			
Weight		4.2		g
Dimensions (L x W x H)	0.77 x 0.39 x 0.49 inches (19.50 × 9.80 × 12.50 mm)			
MTBF	> 3 500 000 hrs (MIL-HDBK -217F, t=+25°C)			
NOTE: All specifications in this datasheet are measured at an ambient temperature of 25°C, humidity<75%, nominal input voltage and at rated output load unless otherwise specified.				

Safety Specifications		
Parameters		
Standards	Designed to meet UL/EN/IEC62368-1	
	EMI - Conducted and radiated emission	CISPR32/EN55032, Class B with EMI Application Circuit

Typical Characteristic

+Vo with nominal input voltage

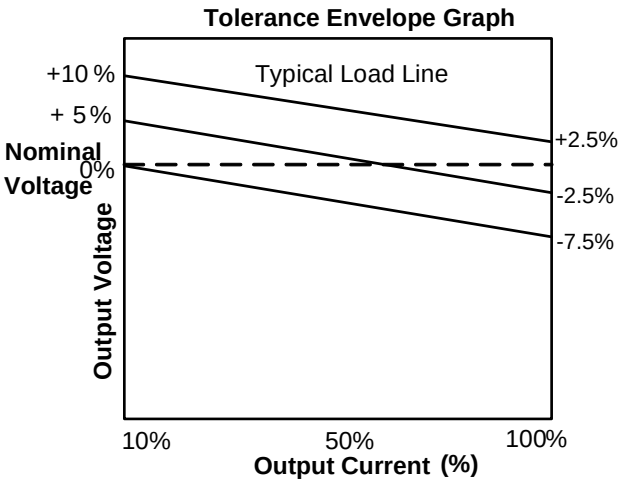

-Vo with nominal input voltage

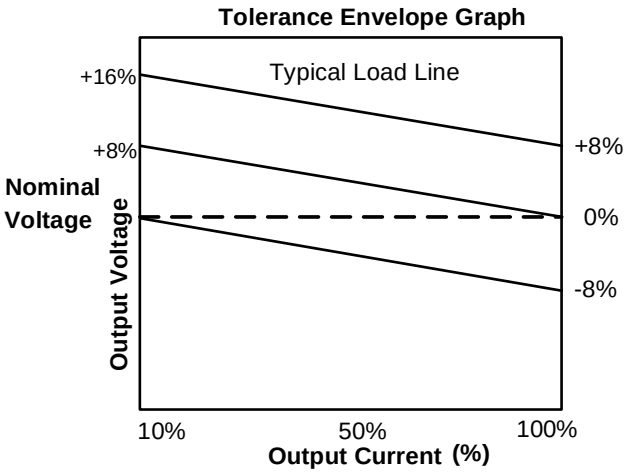

Derating

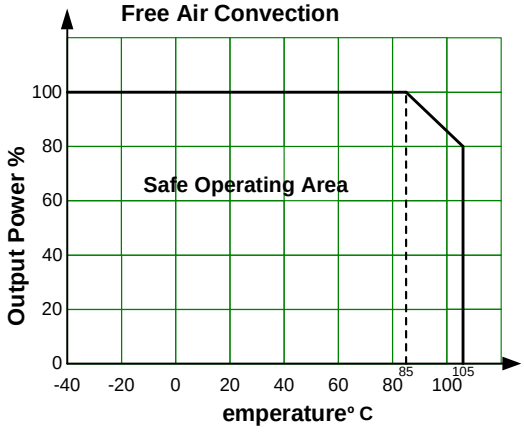

Typical Application Circuit

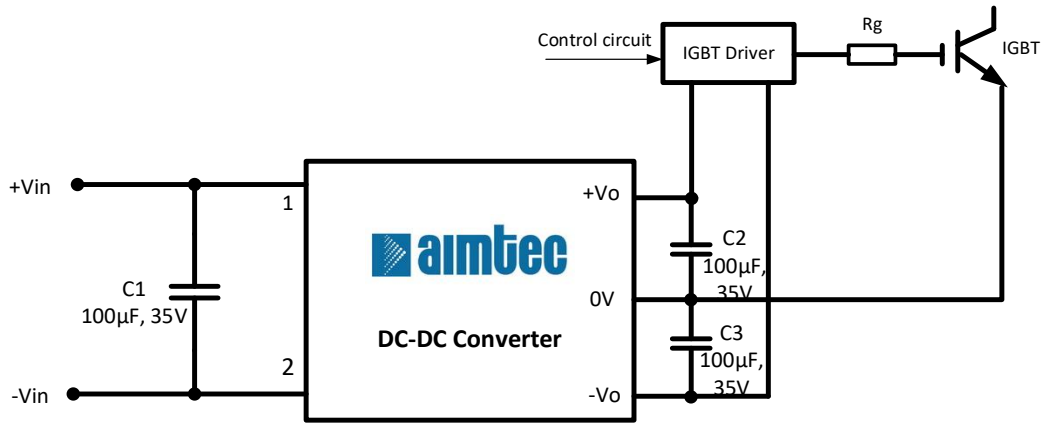

Note: Low internal resistance capacitors are recommended.

EMI Application Circuit

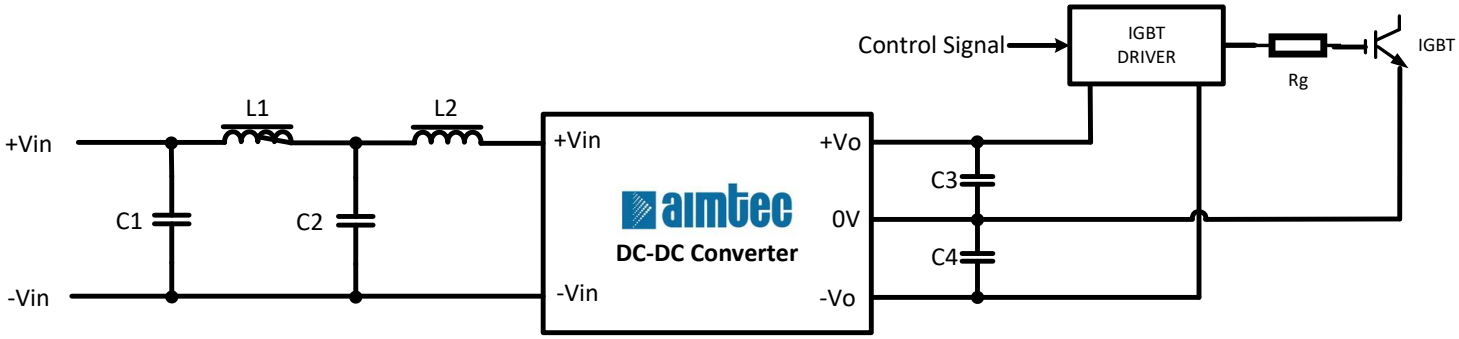

Component	Cin
C1, C2	4.7µF/50V
L1	12µH
L2	47µH
C3, C4	100µF/35V

Note: Input and output capacitors are recommended to use ceramic or electrolytic types. Tantalum capacitors are not recommended.

Dimensions

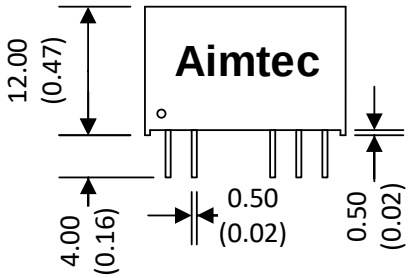

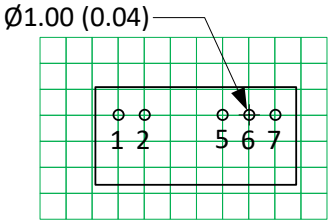

Grid size: 2.54 x 2.54 mm

Pin Out Specifications	
Pin	Dual
1	+V Input
2	-V Input
5	-V Output 2
6	Com
7	+V Output 1

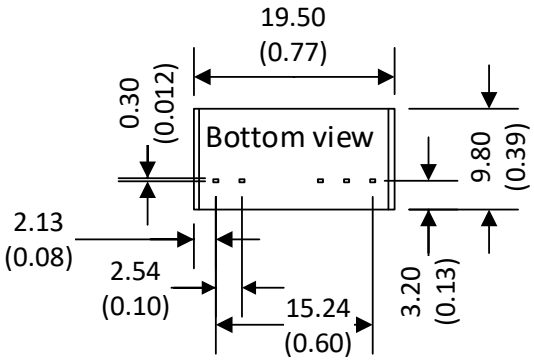

Note:
Unit: mm (inch)
General tolerance: ±0.5 (±0.02)
Pin tolerance: ±0.1 (±0.004)

NOTE: 1. Datasheets are updated as needed and as such, specifications are subject to change without notice. Once printed or downloaded, datasheets are no longer controlled by Aimtec; refer to www.aimtec.com for the most current product specifications. **2.** Product labels shown, including safety agency certifications on labels, may vary based on the date manufactured. **3.** Mechanical drawings and specifications are for reference only. **4.** All specifications are measured at an ambient temperature of 25°C, humidity<75%, nominal input voltage and at rated output load unless otherwise specified. **5.** Aimtec may not have conducted destructive testing or chemical analysis on all internal components and chemicals at the time of publishing this document. CAS numbers and other limited information are considered proprietary and may not be available for release. **6.** This product is not designed for use in critical life support systems, equipment used in hazardous environments, nuclear control systems or other such applications which necessitate specific safety and regulatory standards other the ones listed in this datasheet. **7.** Warranty is in accordance with Aimtec's standard Terms of Sale available at www.aimtec.com.