aimtec
Your Power Partner

Series AM3F-Z

3 Watt | DC-DC Converter



FEATURES:

- RoHS compliant
- 12 Pin SIP Package
- Low ripple and noise
- High efficiency up to 74%
- Operating temperature -25ºC to + 85ºC
- Input / Output isolation 1000, 3000 and 5200VDC
- Continuous Short Circuit Protection
- Regulated single output

CE RoHS

Models
Single output

Model	Input Voltage (V)	Output Voltage (V)	Output Current max (mA)	Isolation (VDC)	Max Capacitive Load (uF)	Efficiency (%)
AM3F-0503SZ	4.5-5.5	3.3	600	1000	470	55
AM3F-0505SZ	4.5-5.5	5	600	1000	470	65
AM3F-0507SZ	4.5-5.5	7.2	416	1000	470	67
AM3F-0509SZ	4.5-5.5	9	333	1000	470	70
AM3F-0512SZ	4.5-5.5	12	250	1000	470	68
AM3F-0515SZ	4.5-5.5	15	200	1000	470	69
AM3F-0518SZ	4.5-5.5	18	166	1000	470	67
AM3F-0524SZ	4.5-5.5	24	125	1000	470	69
AM3F-1203SZ	10.8-13.2	3.3	600	1000	470	59
AM3F-1205SZ	10.8-13.2	5	600	1000	470	64
AM3F-1207SZ	10.8-13.2	7.2	416	1000	470	71
AM3F-1209SZ	10.8-13.2	9	333	1000	470	71
AM3F-1212SZ	10.8-13.2	12	250	1000	470	73
AM3F-1215SZ	10.8-13.2	15	200	1000	470	71
AM3F-1218SZ	10.8-13.2	18	166	1000	470	70
AM3F-1224SZ	10.8-13.2	24	125	1000	470	73
AM3F-2403SZ	21.6-26.4	3.3	600	1000	470	58
AM3F-2405SZ	21.6-26.4	5	600	1000	470	64
AM3F-2407SZ	21.6-26.4	7.2	416	1000	470	67
AM3F-2409SZ	21.6-26.4	9	333	1000	470	72
AM3F-2412SZ	21.6-26.4	12	250	1000	470	74
AM3F-2415SZ	21.6-26.4	15	200	1000	470	71
AM3F-2418SZ	21.6-26.4	18	166	1000	470	72
AM3F-2424SZ	21.6-26.4	24	125	1000	470	74
AM3F-0503SH30Z	4.5-5.5	3.3	600	3000	470	55
AM3F-0505SH30Z	4.5-5.5	5	600	3000	470	65
AM3F-0507SH30Z	4.5-5.5	7.2	416	3000	470	67
AM3F-0509SH30Z	4.5-5.5	9	333	3000	470	70
AM3F-0512SH30Z	4.5-5.5	12	250	3000	470	68
AM3F-0515SH30Z	4.5-5.5	15	200	3000	470	69
AM3F-0518SH30Z	4.5-5.5	18	166	3000	470	67
AM3F-0524SH30Z	4.5-5.5	24	125	3000	470	69
AM3F-1203SH30Z	10.8-13.2	3.3	600	3000	470	59
AM3F-1205SH30Z	10.8-13.2	5	600	3000	470	64
AM3F-1207SH30Z	10.8-13.2	7.2	416	3000	470	71
AM3F-1209SH30Z	10.8-13.2	9	333	3000	470	71
AM3F-1212SH30Z	10.8-13.2	12	250	3000	470	73
AM3F-1215SH30Z	10.8-13.2	15	200	3000	470	71
AM3F-1218SH30Z	10.8-13.2	18	166	3000	470	70
AM3F-1224SH30Z	10.8-13.2	24	125	3000	470	73
AM3F-2403SH30Z	21.6-26.4	3.3	600	3000	470	58
AM3F-2405SH30Z	21.6-26.4	5	600	3000	470	64
AM3F-2407SH30Z	21.6-26.4	7.2	416	3000	470	67
AM3F-2409SH30Z	21.6-26.4	9	333	3000	470	72
AM3F-2412SH30Z	21.6-26.4	12	250	3000	470	74

Models

Single output (Continue)

Model	Input Voltage (V)	Output Voltage (V)	Output Current max (mA)	Isolation (VDC)	Max Capacitive Load (uF)	Efficiency (%)
AM3F-2415SH30Z	21.6-26.4	15	200	3000	470	71
AM3F-2418SH30Z	21.6-26.4	18	166	3000	470	72
AM3F-2424SH30Z	21.6-26.4	24	125	3000	470	74
AM3F-0503SH52Z	4.5-5.5	3.3	600	5200	470	55
AM3F-0505SH52Z	4.5-5.5	5	600	5200	470	65
AM3F-0507SH52Z	4.5-5.5	7.2	416	5200	470	67
AM3F-0509SH52Z	4.5-5.5	9	333	5200	470	70
AM3F-0512SH52Z	4.5-5.5	12	250	5200	470	68
AM3F-0515SH52Z	4.5-5.5	15	200	5200	470	69
AM3F-0518SH52Z	4.5-5.5	18	166	5200	470	67
AM3F-0524SH52Z	4.5-5.5	24	125	5200	470	69
AM3F-1203SH52Z	10.8-13.2	3.3	600	5200	470	59
AM3F-1205SH52Z	10.8-13.2	5	600	5200	470	64
AM3F-1207SH52Z	10.8-13.2	7.2	416	5200	470	71
AM3F-1209SH52Z	10.8-13.2	9	333	5200	470	71
AM3F-1212SH52Z	10.8-13.2	12	250	5200	470	73
AM3F-1215SH52Z	10.8-13.2	15	200	5200	470	71
AM3F-1218SH52Z	10.8-13.2	18	166	5200	470	70
AM3F-1224SH52Z	10.8-13.2	24	125	5200	470	73
AM3F-2403SH52Z	21.6-26.4	3.3	600	5200	470	58
AM3F-2405SH52Z	21.6-26.4	5	600	5200	470	64
AM3F-2407SH52Z	21.6-26.4	7.2	416	5200	470	67
AM3F-2409SH52Z	21.6-26.4	9	333	5200	470	72
AM3F-2412SH52Z	21.6-26.4	12	250	5200	470	74
AM3F-2415SH52Z	21.6-26.4	15	200	5200	470	71
AM3F-2418SH52Z	21.6-26.4	18	166	5200	470	72
AM3F-2424SH52Z	21.6-26.4	24	125	5200	470	74

Input Specifications

Parameters	Nominal	Typical	Maximum	Units
Voltage range	5 12 24	4.5-5.5 10.8-13.2 21.6-26.4		VDC
Filter	Capacitor			
Absolute Maximum Rating	5 Vin 12 Vin 24 Vin	0-7 0-15 0-28		VDC
Peak Input Voltage time		100		ms
Input Reflected Ripple Current *		20		mA p-p

* The input reflected ripple current should be measured with a 12µH inductor.

Isolation Specifications

Parameters	Conditions	Typical	Rated	Units
Tested I/O voltage	60 sec		1000, 3000 and 5200	VDC
Resistance		> 1000		MOhm
Capacitance		60		pF

Output Specifications

Parameters	Conditions	Typical	Maximum	Units
Voltage accuracy		±2		%
Short Circuit protection	Continuous			
Short circuit restart	Auto-recovery			
Line voltage regulation		±0.5		%
Load voltage regulation	0 to 100% load	±0.5		%

Output Specifications (continued)

Parameters	Conditions	Typical	Maximum	Units
Load voltage regulation	0 to 100% load, 3.3V output	±1.5		%
Temperature coefficient		±0.02		%/°C
Ripple & Noise	At 20MHz Bandwidth	75		mV p-p

General Specifications

Parameters	Conditions	Typical	Maximum	Units
Switching frequency	100% load	50		KHz
Operating temperature	Derating above 71°C	-25 to +85		°C
Storage temperature		-40 to +125		°C
Max Case temperature			100	°C
Cooling	Free air convection			
Humidity			95	%
Case material	Non-conductive black plastic			
Weight		7		g
Dimensions (L x W x H)	1.25 x 0.34 x 0.53 inches 32.00 x 8.60 x 13.47 mm			
MTBF	>1,120,000 hrs (MIL-HDBK -217F, Ground Benign, t=+25°C)			

NOTE: All specifications in this datasheet are measured at an ambient temperature of 25°C, humidity<75%, nominal input voltage and at rated output load unless otherwise specified

Safety Specifications

Standards	
Safety	Designed to meet IEC/EN/UL 60950-1, 62368-1
	EN55032, class B, with the recommended EMI circuit
	IEC61000-4-2(ESD) Criteria A
	IEC61000-4-3(Radiated immunity) Criteria A
	IEC61000-4-4(EFT) Criteria A, with the recommended EFT/Surge external circuit
	IEC61000-4-5(Surge) Criteria A, with the recommended EFT/Surge external circuit
	IEC61000-4-6(CS) Criteria A
	IEC61000-4-8(PFMF) Criteria A

Pin Out Specifications

Pin	1000VDC	3000 & 5200VDC
1	+V Input	+V Input
2	N.C.	-V Input
3	N.C.	N.C.
9	N.C.	N.C.
10	-V Output	-V Output
11	+V output	+V output
12	-V Input	N.C.

Dimensions

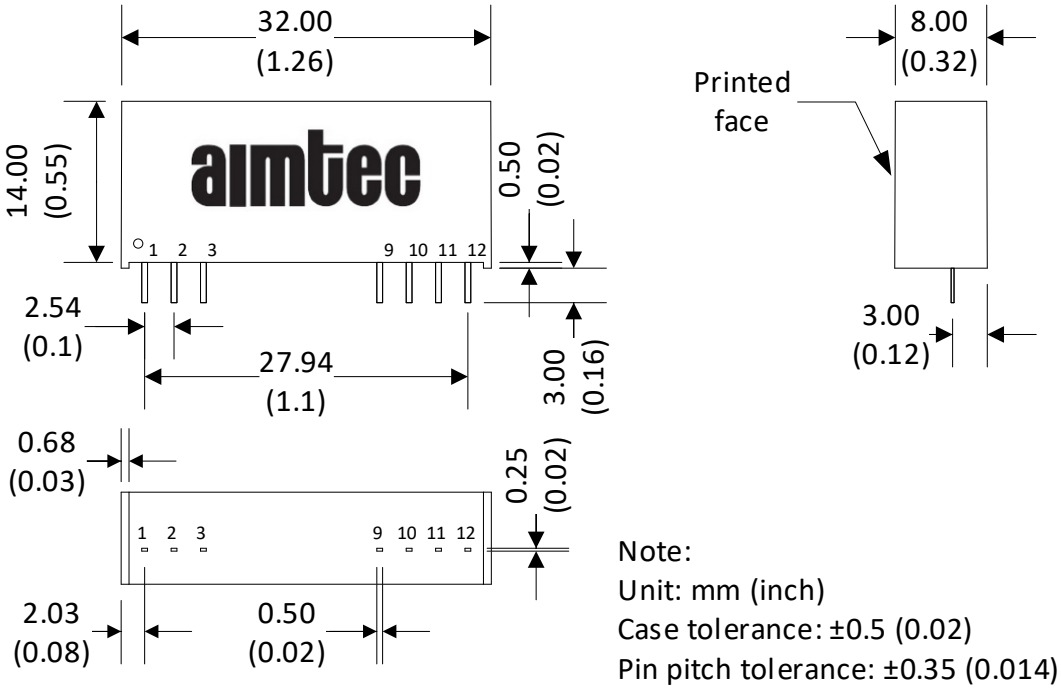

Note:
Unit: mm (inch)
Case tolerance: ±0.5 (0.02)
Pin pitch tolerance: ±0.35 (0.014)

Derating

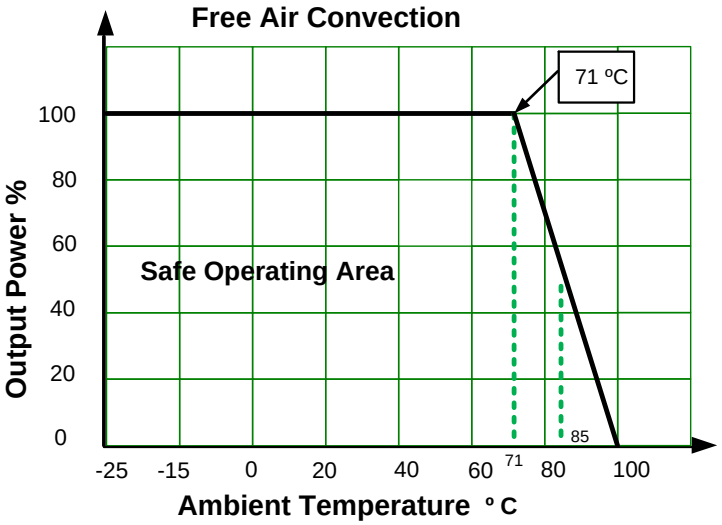

Input Reflected Ripple Test Circuit

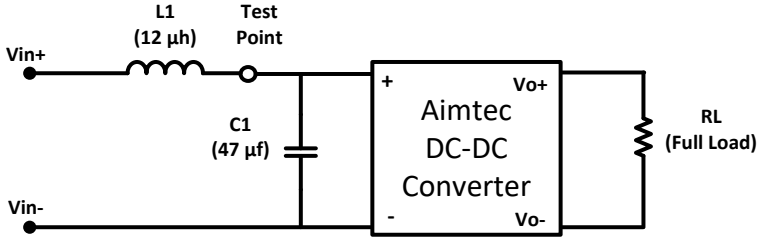

* Tested at full load, and nominal input

Recommended EMI Filter Circuit

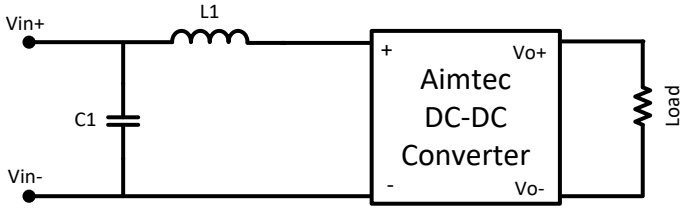

C1	L1
220µF/100V	12µH

EFT/Surge Application circuit

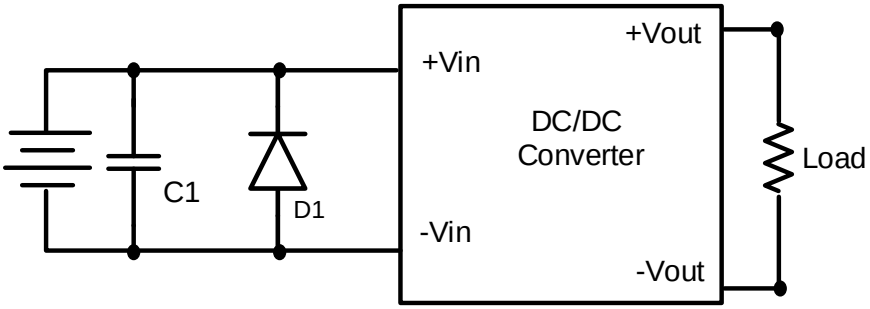

Vin	C1	D1
5VDC	1000µF/50V	TVS, 9V
12VDC	1000µF/50V	TVS, 14V
24VDC	1000µF/50V	TVS, 26V

NOTE: 1. Datasheets are updated as needed and as such, specifications are subject to change without notice. Once printed or downloaded, datasheets are no longer controlled by Aimtec; refer to www.aimtec.com for the most current product specifications. **2.** Product labels shown, including safety agency certifications on labels, may vary based on the date manufactured. **3.** Mechanical drawings and specifications are for reference only. **4.** All specifications are measured at an ambient temperature of 25°C, humidity<75%, nominal input voltage and at rated output load unless otherwise specified. **5.** Aimtec may not have conducted destructive testing or chemical analysis on all internal components and chemicals at the time of publishing this document. CAS numbers and other limited information are considered proprietary and may not be available for release. **6.** This product is not designed for use in critical life support systems, equipment used in hazardous environments, nuclear control systems or other such applications which necessitate specific safety and regulatory standards other the ones listed in this datasheet. **7.** Warranty is in accordance with Aimtec's standard Terms of Sale available at www.aimtec.com.