Click to ORDER samples

AM3GH-LPZ

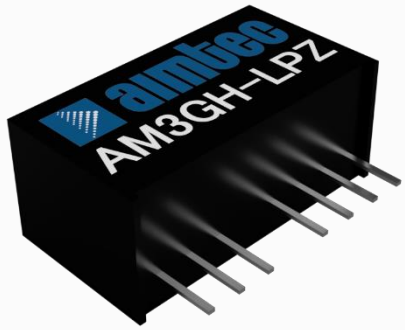

SIP8 Package

The AM3GH-LPZ is a 3W SIP8 DC/DC converter that offers great cost savings thanks to an improved manufacturing process. It also features excellent reliability and performance while offering a wide input voltage range of 4.5-75VDC as well as an output voltage of -15 to 24V. This compact SIP8 design will surely benefit your new system design.

This new series offers a great operating temperature range from -40 to 85°C. Also, an isolation of 3000VDC for improved reliability and system safety as well as a great 1,000,000h MTBF come standard.

The AM3GH-LPZ is suitable for many applications such as industrial systems, portable equipment, and internet of things.

Features

- High I/O Isolation of 3000VDC
- Input under voltage protection, output over current protection and short circuit protection
- Operating Temp: -40 °C to +85 °C
- Industry standard SIP8 pin-out
- Remote On/Off
- Regulated output

RoHS

3yr Warranty

CE

Summary

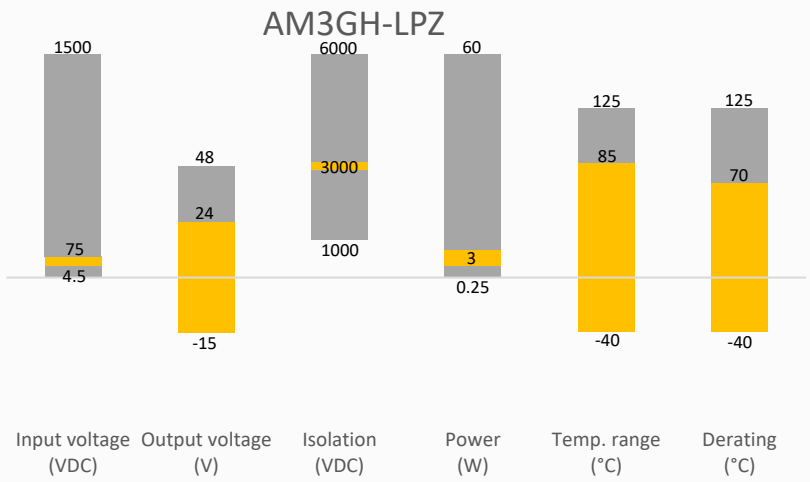

Training

Product Training Video (click to open)

Press Release

Coming Soon!

Application Notes

Applications

Industrial

Portable Equipment

IoT

Models & Specifications

Single Output

Model	Input Voltage (VDC)	Output Voltage (VDC)	Output Current Max/Min (mA)	Isolation (VDC)	Maximum Capacitive Load (µF)	Efficiency Typ. (%)
AM3GH-1203SH30LPZ	12 (4.5-18)	3.3	700/0	3000	1760	75
AM3GH-1205SH30LPZ	12 (4.5-18)	5	600/0	3000	1000	78
AM3GH-1212SH30LPZ	12 (4.5-18)	12	250/0	3000	170	80
AM3GH-1215SH30LPZ	12 (4.5-18)	15	200/0	3000	110	81
AM3GH-2403SH30LPZ	24 (9-36)	3.3	700/0	3000	1760	75
AM3GH-2405SH30LPZ	24 (9-36)	5	600/0	3000	1000	80
AM3GH-2409SH30LPZ	24 (9-36)	9	333/0	3000	330	81
AM3GH-2412SH30LPZ	24 (9-36)	12	250/0	3000	170	81
AM3GH-2415SH30LPZ	24 (9-36)	15	200/0	3000	110	82
AM3GH-2424SH30LPZ	24 (9-36)	24	125/0	3000	330	82
AM3GH-4803SH30LPZ	48 (18-75)	3.3	700/0	3000	1760	74
AM3GH-4805SH30LPZ	48 (18-75)	5	600/0	3000	1000	79
AM3GH-4812SH30LPZ	48 (18-75)	12	250/0	3000	330	81
AM3GH-4815SH30LPZ	48 (18-75)	15	200/0	3000	170	82
AM3GH-4824SH30LPZ	48 (18-75)	24	125/0	3000	110	82

Dual Output

Model	Input Voltage (VDC)	Output Voltage (VDC)	Output Current Max/Min (mA)	Isolation (VDC)	Maximum Capacitive Load (µF)	Efficiency Typ. (%)
AM3GH-1205DH30LPZ	12 (4.5-18)	±5	±300/0	3000	±470	80
AM3GH-1212DH30LPZ	12 (4.5-18)	±12	±125/0	3000	±100	80
AM3GH-1215DH30LPZ	12 (4.5-18)	±15	±100/0	3000	±47	80
AM3GH-2405DH30LPZ	24 (9-36)	±5	±300/0	3000	±470	79
AM3GH-2412DH30LPZ	24 (9-36)	±12	±125/0	3000	±100	82
AM3GH-2415DH30LPZ	24 (9-36)	±15	±100/0	3000	±47	82
AM3GH-4805DH30LPZ	48 (18-75)	±5	±300/0	3000	±470	79
AM3GH-4812DH30LPZ	48 (18-75)	±12	±125/0	3000	±100	80
AM3GH-4815DH30LPZ	48 (18-75)	±15	±100/0	3000	±47	80

Input Specification

Parameters	Conditions	Typical	Maximum	Units
Input current	12Vin	306		mA
	24Vin	140		mA
	48Vin	82		mA
Filter	Capacitor			
Voltage Types	Vo, Io Nom		4:1	
Maximum Rating	12Vin	20		VDC
	24Vin	50		VDC
	48Vin	100		VDC
Peak Input Voltage Time			1	Sec
No load input current	12Vin	60		mA

	24Vin	25		mA
	48Vin	15		mA
Input Reflected Ripple Current		15		mA
Start-up voltage	12Vin		9	VDC
	24Vin		18	VDC
	48Vin		36	VDC
Under voltage protection	12Vin		4	VDC
	24Vin		8	VDC
	48Vin		16	VDC
On/Off Control	ON – open or logic high, positive logic	>3.5	12	VDC
	OFF – grounded or logic low, positive logic	>0	0.7	VDC
	Control pin current, positive logic	5	10	mA

Isolation Specification

Parameters	Conditions	Typical	Maximum	Units
Tested I/O voltage	60 sec, leakage ≤ 1mA	3000		VDC
Resistance	500VDC	>1000		MΩ
Capacitance	100KHz, 0.1V	120		pF

Output Specification

Parameters	Conditions	Typical	Maximum	Units
Voltage Tolerance	100% Full Load, 3.3Vout and 5Vout model	±2	±5	%
	100% Full Load, others	±1	±3	%
Line Regulation	Full load	±0.3	±0.5	%
Load regulation	25% load step	±0.5	±1	%
Temperature coefficient		±0.02	±0.03	%/°C
Transient Recovery Time	25% load step	300	500	µS
Transient Response Deviation	25% load step	±2.5	±5	%
Ripple & Noise*		50	150	mV p-p

* Ripple and Noise are measured at 20MHz bandwidth. Please refer to the application note for specific details.

General Specifications

Parameters	Conditions	Typical	Maximum	Units
Switching frequency	100% load	300		KHz
Over current protection		140		% Iout
Short circuit protection	Continuous, auto-recovery			
Operating temperature		-40 to +85		°C
Storage temperature		-55 to +125		°C
Lead Temperature	1.5mm from case for 10 seconds		300	°C
Cooling	Free air convection			
Humidity	Non-condensing	>5	95	% RH
Case material	Plastic (UL94V-0)			
Vibration	10-150Hz, 5G, 0.75mm along X, Y and Z			
Weight		4		g
Dimensions (L x W x H)	0.87 x 0.37 x 0.47 inches (22.00 x 9.50 x 12.00 mm)			
MTBF	1 000 000 hrs (MIL-HDBK -217F, t=+25°C) / Full Load			

NOTE: All specifications in this datasheet are measured at an ambient temperature of 25°C, humidity<75%, nominal input voltage and at rated output load unless otherwise specified.

Safety Specifications		
Parameters		
Standards	Designed to meet UL/EN/IEC 62368-1	
	EMI - Conducted and radiated emission	CISPR32/EN55032 Class B with EMI recommended circuit
	Electrostatic Discharge Immunity	IEC/EN 61000-4-2, Contact ±6KVperf. Criteria B
	RF, Electromagnetic Field Immunity	IEC/EN 61000-4-3, 10V/m, Criteria A
	Electrical Fast Transient/Burst Immunity	IEC/EN 61000-4-4, ±2KV with recommended EMC circuit, Criteria B
	Surge Immunity	IEC/EN 61000-4-5, L-L ±2KV, Criteria B
	RF, Conducted Disturbance Immunity	IEC/EN 61000-4-6, 3 Vr.m.s, Criteria A
	Voltage dips, Short Interruptions & Voltage variations Immunity	IEC/EN 61000-4-29, 0-70%, Criteria B

Derating

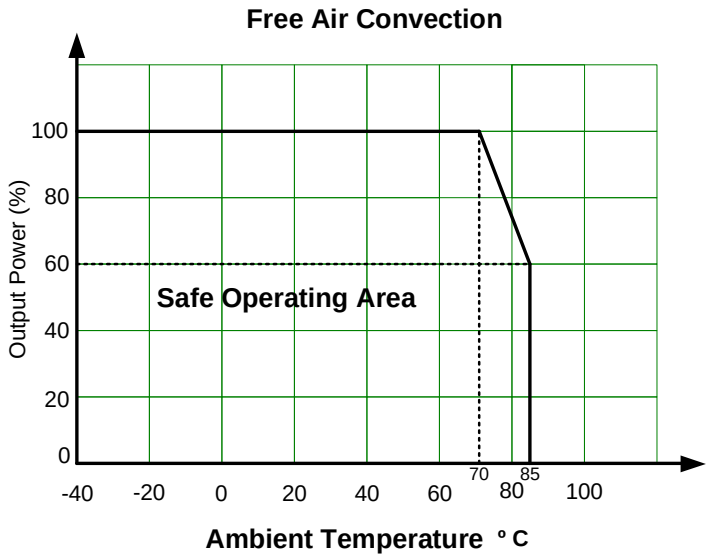

Typical application circuit

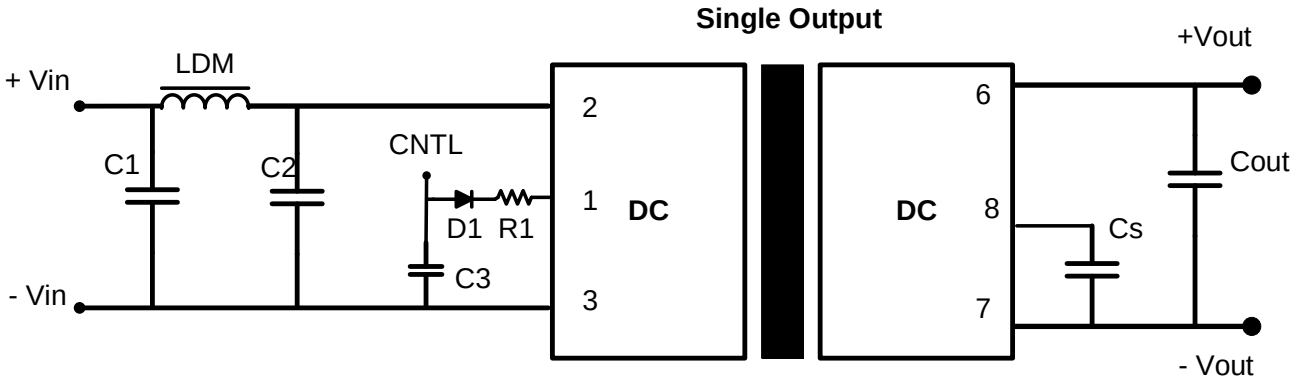

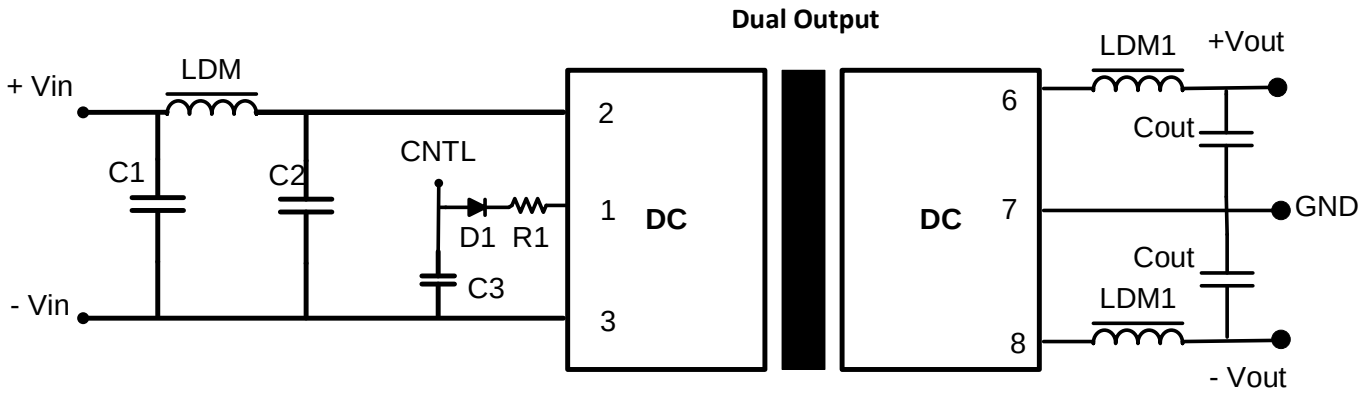

Model	C1	C2	Cout	C3	Cs	LDM	LDM1	D1	R1
12Vin	100µF	47µF	100µF	47nF/100V	10µF~22µF	47µH~12µH	2.2µH~10µH	60V, 1A	See formula
24Vin	10µF	1µF	100µF	47nF/100V	10µF~22µF	47µH~12µH	2.2µH~10µH	60V, 1A	See formula
48Vin	10µF	1µF	100µF	47nF/100V	10µF~22µF	47µH~12µH	2.2µH~10µH	60V, 1A	See formula

EMI recommended circuit

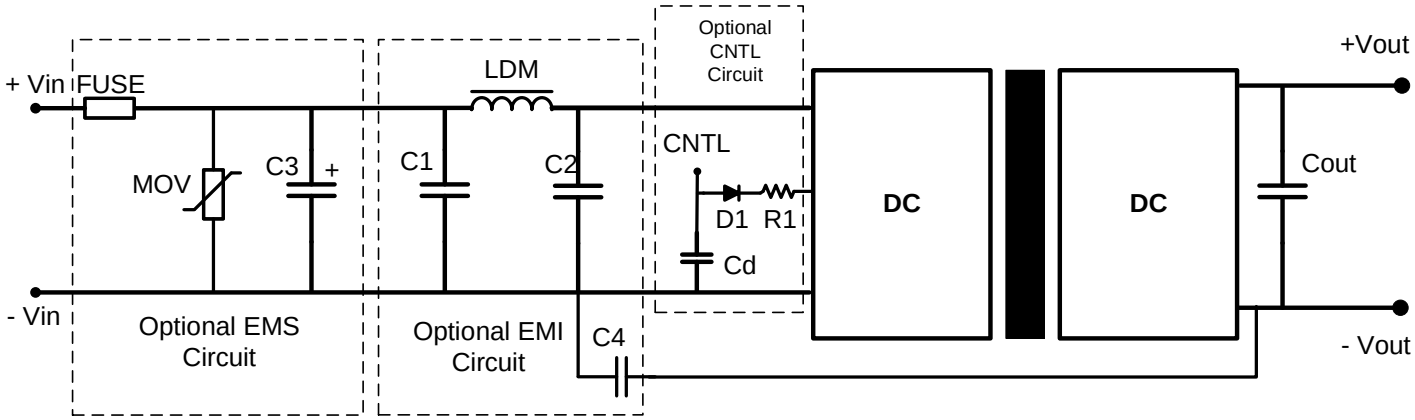

Model	C3	C1, C2	Cd	C4	D1	LDM	MOV	R1	Cout
12Vin	1000µF, 25V	4.7µF, 50V	47nF/100V	1nF/4000V	60V, 1A	12µH	14D390K	See formula	100µF
24Vin	330µF, 50V	4.7µF, 50V	47nF/100V	1nF/4000V	60V, 1A	12µH	14D560K	See formula	100µF
48Vin	330µF, 100V	4.7µF, 100V	47nF/100V	1nF/4000V	60V, 1A	12µH	14D101K	See formula	100µF
Note: Fuse is user selectable, slow blow type R1 = ((Vcd – Vd1 – 1.0) / Icntl) - 300									

Dimensions

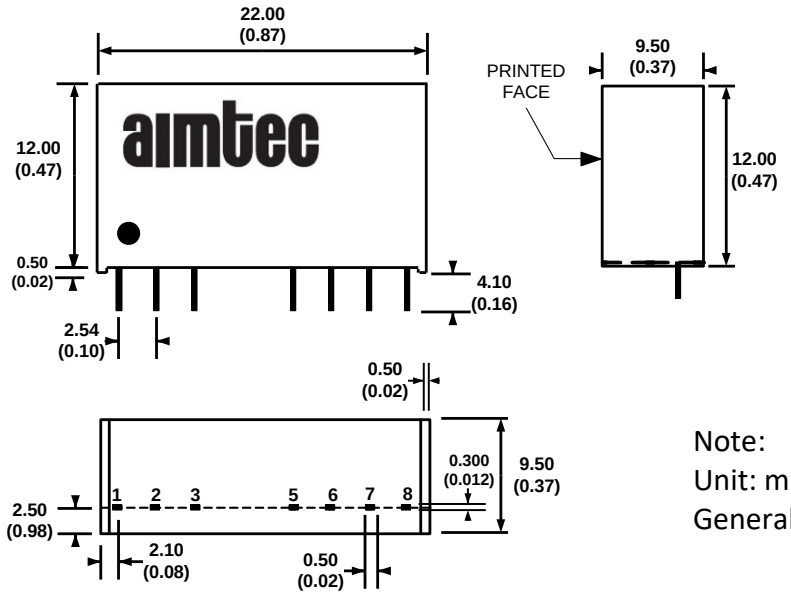

Pin Out Specifications		
Pin	Single output	Dual output
1	-V Input	-V Input
2	+V Input	+V Input
3	Ctrl-Control input (can be left open)	Ctrl-Control input (can be left open)
6	+V Output	+V Output
7	-V Output	Common
8	N.C.	-V Output

Note:
Unit: mm(inch)
General tolerances: ±0.25(±0.010)

NOTE: 1. Datasheets are updated as needed and as such, specifications are subject to change without notice. Once printed or downloaded, datasheets are no longer controlled by Aimtec; refer to www.aimtec.com for the most current product specifications. **2.** Product labels shown, including safety agency certifications on labels, may vary based on the date manufactured. **3.** Mechanical drawings and specifications are for reference only. **4.** All specifications are measured at an ambient temperature of 25°C, humidity<75%, nominal input voltage and at rated output load unless otherwise specified. **5.** Aimtec may not have conducted destructive testing or chemical analysis on all internal components and chemicals at the time of publishing this document. CAS numbers and other limited information are considered proprietary and may not be available for release. **6.** This product is not designed for use in critical life support systems, equipment used in hazardous environments, nuclear control systems or other such applications which necessitate specific safety and regulatory standards other the ones listed in this datasheet. **7.** Warranty is in accordance with Aimtec's standard Terms of Sale available at www.aimtec.com.