aimtec
Your Power Partner

Series AM3GH-Z

3 Watt | DC-DC Converter



FEATURES:

- SIP 8 Package
- Low Ripple and Noise
- Continuous Short Circuit Protection
- -40ºC to +85ºC Operating Temperature Range
- Ultra-Wide Input Range 4:1
- 1600VDC I/O Isolation
- Efficiency up to 82%
- Remote ON/OFF Control

Models
Single output

Model	Input Voltage (V)	Output Voltage (V)	Output Current max (mA)	Maximum capacitive load (µF)	Efficiency (%)
AM3GH-1203SZ	4.5-18	3.3	700	1760	72
AM3GH-1205SZ	4.5-18	5	600	1000	77
AM3GH-1212SZ	4.5-18	12	250	170	81
AM3GH-1215SZ	4.5-18	15	200	110	81
AM3GH-2403SZ	9-36	3.3	700	1760	75
AM3GH-2405SZ	9-36	5	600	1000	79
AM3GH-2412SZ	9-36	12	250	170	82
AM3GH-2415SZ	9-36	15	200	110	82
AM3GH-4803SZ	18-75	3.3	700	1760	74
AM3GH-4805SZ	18-75	5	600	1000	78
AM3GH-4812SZ	18-75	12	250	170	80
AM3GH-4815SZ	18-75	15	200	110	81

Models
Dual output

Model	Input Voltage (V)	Output Voltage (V)	Output Current max (mA)	Maximum capacitive load (µF)	Efficiency (%)
AM3GH-1205DZ	4.5-18	±5	±300	±470	77
AM3GH-1212DZ	4.5-18	±12	±125	±100	80
AM3GH-1215DZ	4.5-18	±15	±100	±47	80
AM3GH-2405DZ	9-36	±5	±300	±470	79
AM3GH-2412DZ	9-36	±12	±125	±100	79
AM3GH-2415DZ	9-36	±15	±100	±47	80
AM3GH-4805DZ	18-75	±5	±300	±470	79
AM3GH-4812DZ	18-75	±12	±125	±100	79
AM3GH-4815DZ	18-75	±15	±100	±47	79

NOTE: All specifications in this datasheet are measured at an ambient temperature of 25°C, humidity<75%, nominal input voltage and at rated output load unless otherwise specified.

Input Specifications

Parameters	Nominal	Typical	Maximum	Units
Voltage range	12	4.5-18		VDC
	24	9-36		VDC
	48	18-75		VDC
Filter	Capacitor			
Start up time		30		ms
Absolute Maximum Rating	12		25	VDC
	24		50	VDC
	48		100	VDC
Peak Input Voltage time			100	ms
On/Off control	ON 0 to 0.6VDC (or open) ; OFF:2.7 to 15.0VDC, OFF idle current: 2-4mA			
No Load Input Current			40	mA
Input reflected current*		20		mA p-p

* The input reflected ripple current should be measured with connected 12µH inductor and a 47µF capacitor.

Isolation Specifications

Parameters	Conditions	Typical	Rated	Units
Tested I/O voltage	60 sec		1600	VDC
Resistance		>1000		MOhm
Capacitance		200		pF

Output Specifications

Parameters	Conditions	Typical	Maximum	Units
Voltage accuracy			±1	%
Cross Regulation (Dual Output)	25% load on 1st output - 100% load on 2nd load	±5		%
Short Circuit protection	Continuous			
Short circuit restart	Auto-Recovery			
Line voltage regulation			±0.2	%
Load voltage regulation	0% to 100% load for single output models 10% to 100% load for dual output models		±1	%
Temperature coefficient		±0.02		%/°C
Ripple & Noise*	20MHz Bandwidth		30	mV p-p

* Measured with a 1µF CC

General Specifications

Parameters	Conditions	Typical	Maximum	Units
Switching frequency	100% load	100		KHz
Operating temperature		-40 to 85		°C
Storage temperature		-40 to +125		°C
Maximum case temperature			100	°C
Derating	Above 71°C	5		%/ °C
Cooling	Free Air Convection			
Humidity			95	% RH
Case material	Non conductive black plastic			
Potting Material	Silicon (UL94V-0 rated)			
Weight		4.5		g
Dimensions (L x W x H)	0.86 x 0.36 x 0.44 inches 21.85 x 9.20 x 11.10 mm			
MTBF	>1,700,000 hrs (MIL-HDBK -217F, Ground Benign, t=+25°C)			
Maximum soldering temperature	1.5mm from case for 10 second		260	°C
Transient recovery time	25% load step change, 25% to 100%	250		uS
Transient recovery deviation	25% load step change, 25% to 100%		±3	%

Safety Specifications

Parameters	
Agency Approval	CE
Standards	Designed to meet IEC60950-1, 62368-1
	EN55032, Class A with the recommended circuit
	IEC61000-4-2, Perf. Criteria A
	IEC61000-4-3, Perf. Criteria A
	IEC61000-4-4, Perf. Criteria A (external 220uF/100V cap required)
	IEC61000-4-5, Perf. Criteria A (external 220uF/100V cap required)
	IEC61000-4-6, Perf. Criteria A
	IEC61000-4-8, Perf. Criteria A

Dimensions

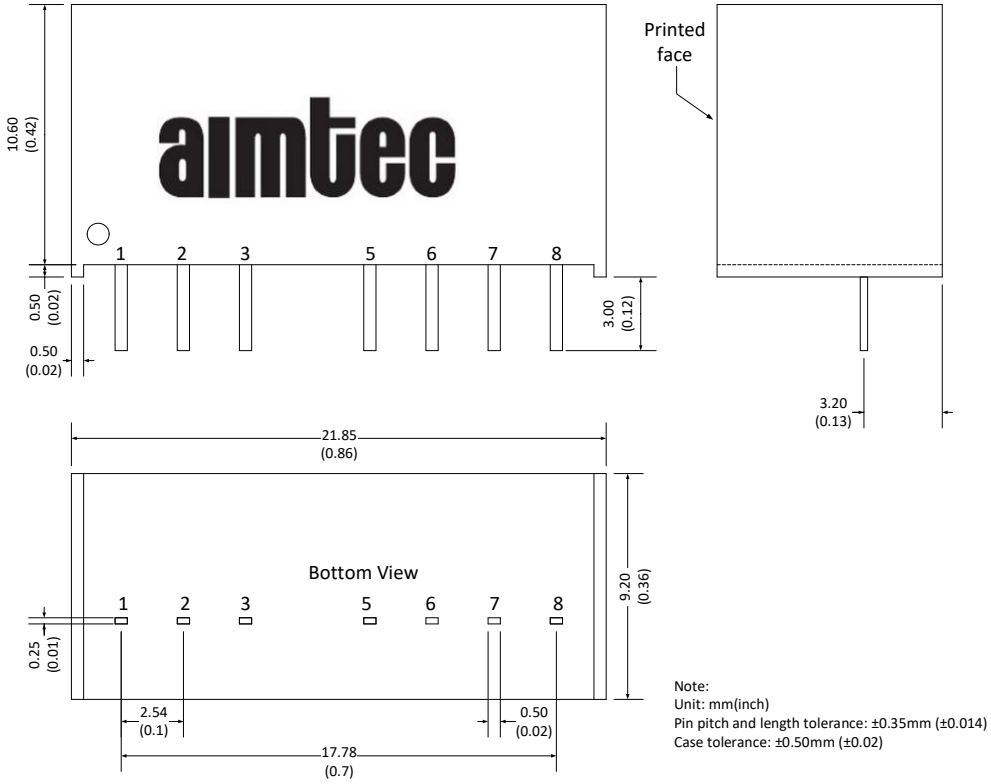

Note:
Unit: mm(inch)
Pin pitch and length tolerance: ±0.35mm (±0.014)
Case tolerance: ±0.50mm (±0.02)

Pin	Single	Dual
1	- V Input	- V Input
2	+ V Input	+ V Input
3	On/Off Control	On/Off Control
5	N.C.	N.C.
6	+ V Output	+ V Output
7	- V Output	Common
8	N.C.	- V Output
NC: Not Connected		

Derating

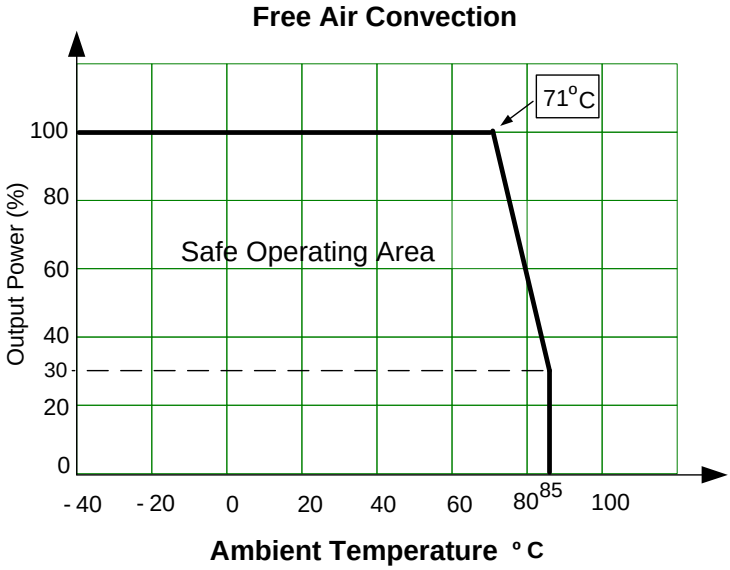

Control ON/OFF pin connection example

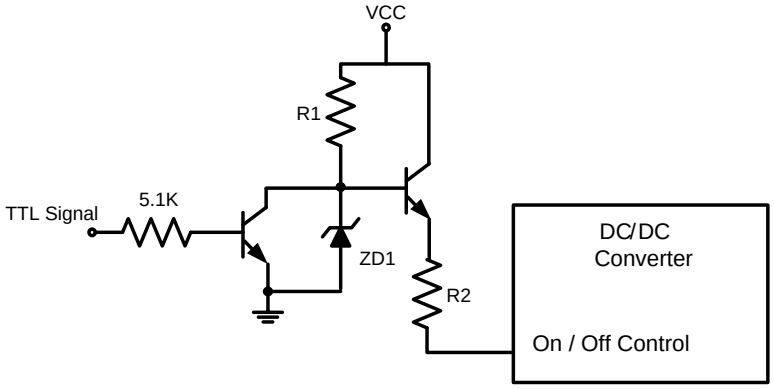

VCC (VDC)	R1 (KΩ)	R2(KΩ)	ZD1(V , mA)
4.5 -18	7.5	0	10, 5
9 - 36	18	2.2	18, 5
18 - 75	33	6.8	36, 5

Recommended Circuits

Conducted and Radiated Emissions

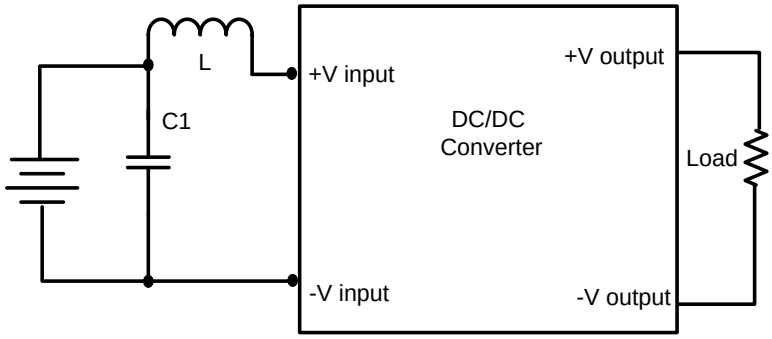

Input Voltage (V)	C1 (uF/V)	L(uH)
12	10/35	2.5
24	2.2/100	10
48	2.2/100	18

EFT/ Surge

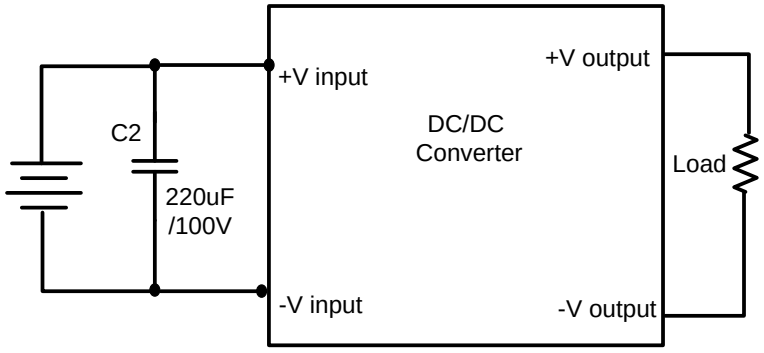

NOTE: 1. Datasheets are updated as needed and as such, specifications are subject to change without notice. Once printed or downloaded, datasheets are no longer controlled by Aimtec; refer to www.aimtec.com for the most current product specifications. **2.** Product labels shown, including safety agency certifications on labels, may vary based on the date manufactured. **3.** Mechanical drawings and specifications are for reference only. **4.** All specifications are measured at an ambient temperature of 25°C, humidity<75%, nominal input voltage and at rated output load unless otherwise specified. **5.** Aimtec may not have conducted destructive testing or chemical analysis on all internal components and chemicals at the time of publishing this document. CAS numbers and other limited information are considered proprietary and may not be available for release. **6.** This product is not designed for use in critical life support systems, equipment used in hazardous environments, nuclear control systems or other such applications which necessitate specific safety and regulatory standards other the ones listed in this datasheet. **7.** Warranty is in accordance with Aimtec's standard Terms of Sale available at www.aimtec.com.