aimtec
Your Power Partner

Series AM3GW-Z

3 Watt | DC-DC Converter



FEATURES:

- SIP9 Package
- Low Ripple and Noise
- Continuous Short Circuit Protection
- -40ºC to +85ºC Operating Temperature Range
- Ultra-Wide Input Range 4:1
- 1500VDC I/O Isolation
- Efficiency up to 85%
- Remote ON / OFF Control

Models
Single output

Model	Input Voltage (V)	Output Voltage (V)	Output Current Max (mA)	Maximum Capacitive Load (µF)	Input Current Full Load | No Load (mA)		Efficiency (%)
AM3GW-2403SZ	9-36	3.3	700	2200	125	10	77
AM3GW-2405SZ	9-36	5	600	1000	153	10	82
AM3GW-2412SZ	9-36	12	250	165	149	10	84
AM3GW-2415SZ	9-36	15	200	100	148	10	85
AM3GW-4803SZ	18-75	3.3	700	2200	65	5	75
AM3GW-4805SZ	18-75	5	600	1000	78	5	81
AM3GW-4812SZ	18-75	12	250	165	75	5	84
AM3GW-4815SZ	18-75	15	200	100	75	5	84

Models
Dual output

Model	Input Voltage (V)	Output Voltage (V)	Output Current Max (mA)	Maximum Capacitive Load (µF)	Input Current Full Load | No Load (mA)		Efficiency (%)
AM3GW-2405DZ	9-36	±5	±300	±470	155	10	81
AM3GW-2412DZ	9-36	±12	±125	±100	149	10	84
AM3GW-2415DZ	9-36	±15	±100	±47	149	10	84
AM3GW-4805DZ	18-75	±5	±300	±470	78	5	81
AM3GW-4812DZ	18-75	±12	±125	±100	75	5	84
AM3GW-4815DZ	18-75	±15	±100	±47	76	5	83

NOTE: All specifications in this datasheet are measured at an ambient temperature of 25°C, humidity<75%, nominal input voltage and at rated output load unless otherwise specified.

Input Specifications

Parameters	Nominal	Typical	Maximum	Units
Voltage Range	24 48	9-36 18-75		VDC
Filter		Capacitor		
Start Up Time		10		ms
Absolute Maximum Rating	24 48		50 100	VDC
Peak Input Voltage Time			100	ms
On/Off Control	ON: 0 to 0.6VDC (or open) ; OFF:2.7 to 15.0VDC, OFF idle current: 5mA, max			
Input Reflected Ripple Current		20		mA p-p

Isolation Specifications

Parameters	Conditions	Typical	Rated	Units
Tested I/O Voltage	60 sec		1500	VDC
Resistance		>1000		MOhm
Capacitance		500		pF

Output Specifications

Parameters	Conditions	Typical	Maximum	Units
Voltage Accuracy		±1		%
Cross Regulation (Dual Output Models)	25% load on one output – 100% load on second load	±5		%
Short Circuit Protection	Hiccup	Continuous		
Short Circuit Restart	Auto-Recovery			
Line Voltage Regulation	LL~HL	±0.5		%
Load Voltage Regulation	From 10% to 100% load From 0% to 100% load 12Vout and 15Vout From 0% to 100% load 3.3Vout and 5Vout	±0.5 ±0.5 ±1		%
Ripple & Noise	20MHz Bandwidth	50		mV p-p
Transient Response Deviation		±3		%
Transient Recovery Time		300		µs

General Specifications

Parameters	Conditions	Typical	Maximum	Units
Switching Frequency	100% load	250		KHz
Operating Temperature	-40 to 85			ºC
Storage Temperature	-40 to +125			ºC
Temperature Coefficient		±0.02		%/ºC
Maximum Case Temperature			100	ºC
Derating	Above 75°C	3.5		%/°C
Cooling	Free Air Convection			
Humidity			95	% RH
Case Material	Non conductive black plastic			
Potting Material	Epoxy (UL94V-0 rated)			
Weight	6.5			g
Dimensions (L x W x H)	1.02 x 0.37 x 0.49 inches 26.00 x 9.30 x 12.50 mm			
MTBF	>1,212,000 hrs (MIL-HDBK -217F, Ground Benign, t=+25ºC)			
Max Soldering Temperature	1.5mm from case 10 second		260	ºC

Safety Specifications

Parameters	
Agency Approval	CE, UL
Standards	UL 60950-1:2001, UL62368-1
	EN55032 Class A,
	IEC61000-4-2, Perf. Criteria B
	IEC61000-4-3, Perf. Criteria A
	IEC61000-4-4, Perf. Criteria B (external 220uF/100V cap required)
	IEC61000-4-5, Perf. Criteria B (external 220uF/100V cap required)
	IEC61000-4-6, Perf. Criteria A
	IEC61000-4-8, Perf. Criteria A

Pin Out Specifications

Pin	Single	Dual
1	- V Input	- V Input
2	+ V Input	+ V Input
3	On/Off Control	On/Off Control
6	+ V Output	+ V Output
7	NC	Common
8	NC	NC
9	- V Output	-V Output

Dimensions

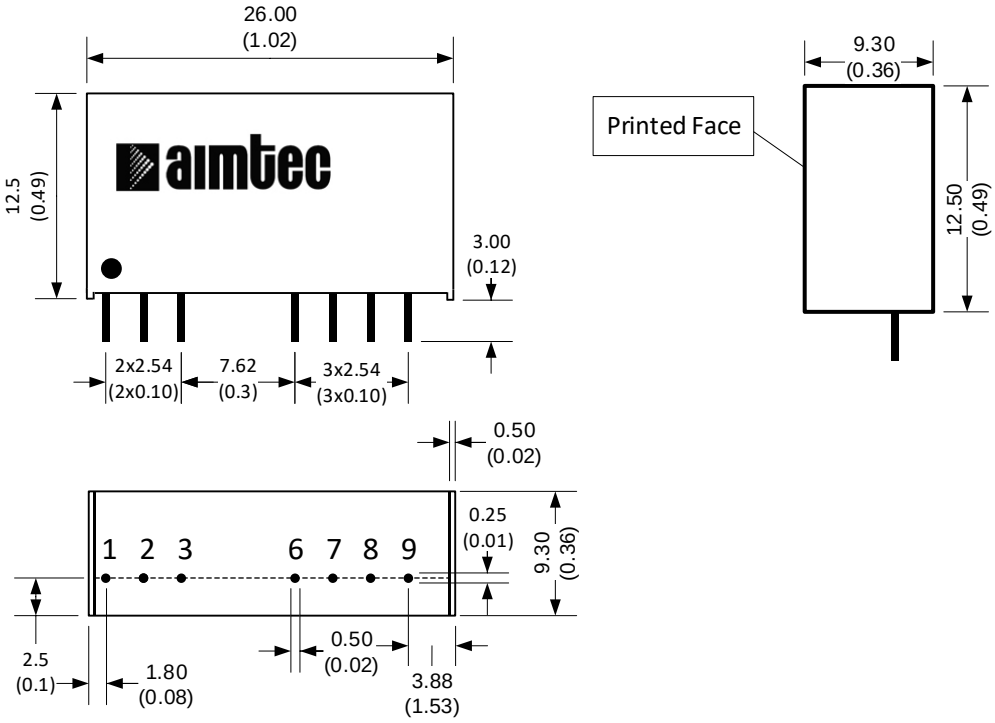

All dimensions are in millimeters (inches)
Pin diameter: 1.0 ±0.05 (0.04 ±0.002)
Pin pitch tolerance: ±0.35 (±0.014)
Case Tolerance: ±0.5 (±0.02)

Derating

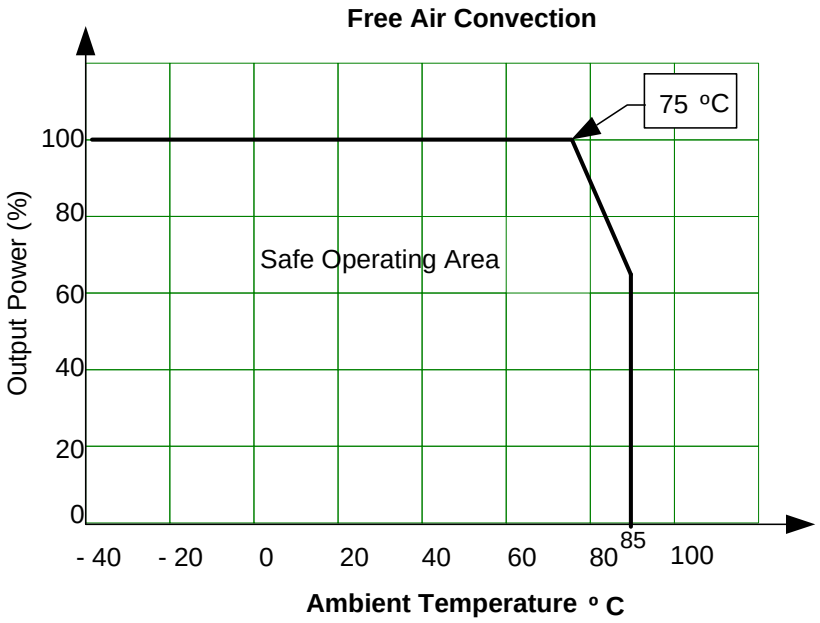

Conducted Emissions

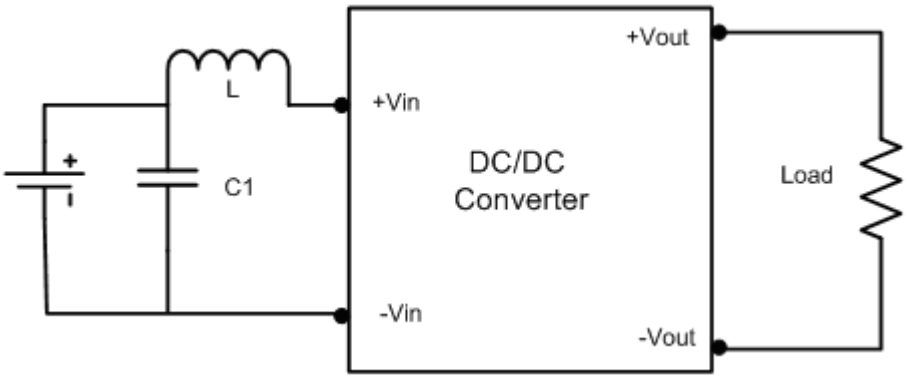

Models	C1	L1
AM2GW-24XX-Z	1210,225K/100V,X7R, 2pcs	6.8µH
AM2GW-48XX-Z	1210,105k/100V,X7R	56µH

Surge:

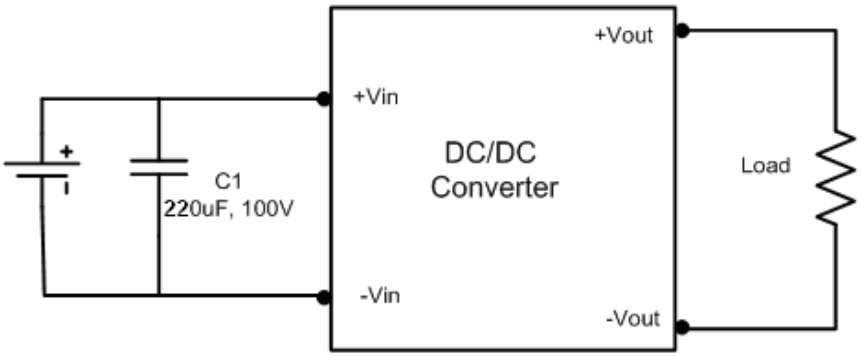

Input Reflected Ripple Current

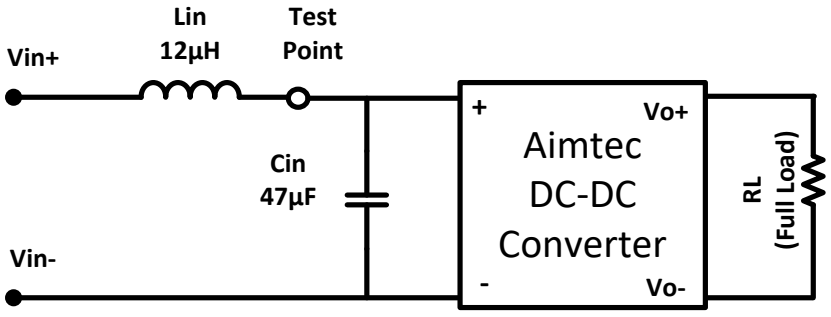

* Tested at full load, and nominal input

Typical Efficiency Example Charts

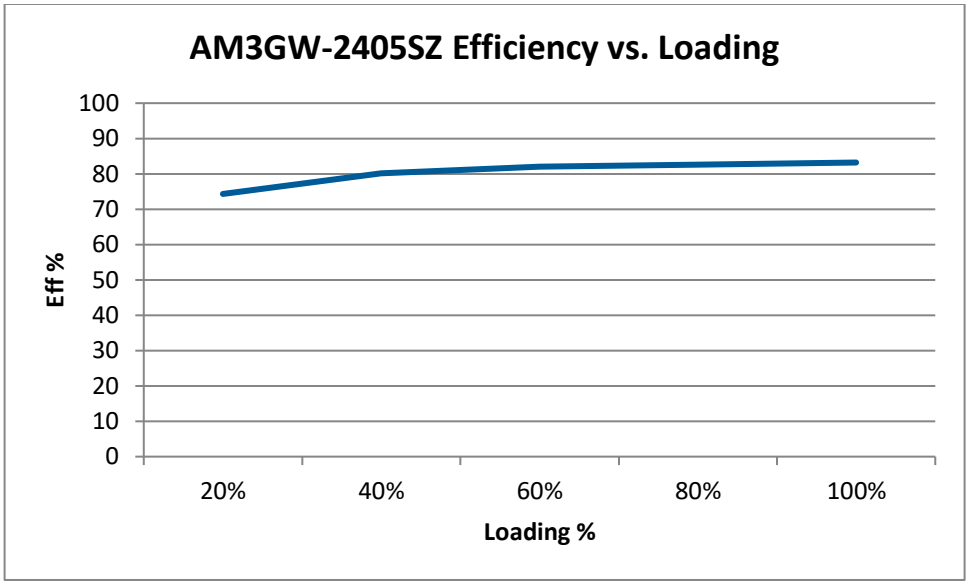

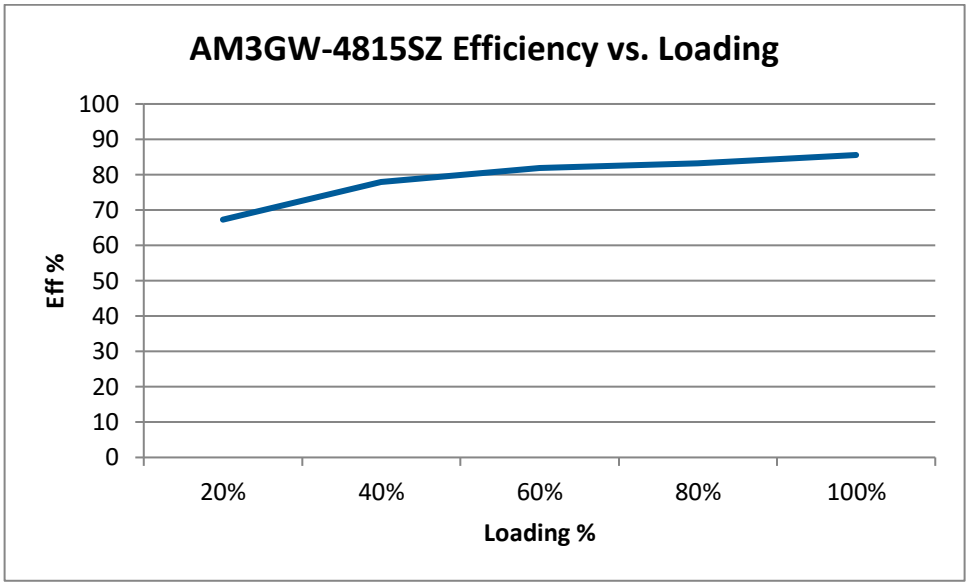

NOTE: 1. Datasheets are updated as needed and as such, specifications are subject to change without notice. Once printed or downloaded, datasheets are no longer controlled by Aimtec; refer to www.aimtec.com for the most current product specifications. **2.** Product labels shown, including safety agency certifications on labels, may vary based on the date manufactured. **3.** Mechanical drawings and specifications are for reference only. **4.** All specifications are measured at an ambient temperature of 25°C, humidity<75%, nominal input voltage and at rated output load unless otherwise specified. **5.** Aimtec may not have conducted destructive testing or chemical analysis on all internal components and chemicals at the time of publishing this document. CAS numbers and other limited information are considered proprietary and may not be available for release. **6.** This product is not designed for use in critical life support systems, equipment used in hazardous environments, nuclear control systems or other such applications which necessitate specific safety and regulatory standards other the ones listed in this datasheet. **7.** Warranty is in accordance with Aimtec's standard Terms of Sale available at www.aimtec.com.