Series AM3HW-NZ

3 Watt | DC-DC Converter



FEATURES:

- SMD Package
- Ultra-wide input range 4:1
- High efficiency up to 84%
- Low ripple and noise
- Remote On/Off Control
- Low no load power consumption of 0.10W
- Input to Output Isolation of 1500VDC
- Input under voltage lockout
- Over current and Short circuit protection
- Operating temperature of -40 to +85°C

RoHS

Models

Single output

Model	Input Voltage (V)	Max Input current full load (mA)	Output Voltage (V)	Output Current max (mA)	Isolation (VDC)	Max Capacitive Load (uF)	Efficiency (%)
AM3HW-2403S-NZ*	9-36	138	3.3	728	1500	2200	75
AM3HW-2405S-NZ	9-36	161	5	600	1500	2200	80
AM3HW-2409S-NZ	9-36	161	9	333	1500	1000	80
AM3HW-2412S-NZ	9-36	161	12	250	1500	680	82
AM3HW-2415S-NZ	9-36	161	15	200	1500	470	83
AM3HW-2424S-NZ	9-36	161	24	125	1500	100	82
AM3HW-4803S-NZ	18-75	69	3.3	728	1500	2200	75
AM3HW-4805S-NZ	18-75	82	5	600	1500	2200	79
AM3HW-4812S-NZ	18-75	82	12	250	1500	680	82
AM3HW-4815S-NZ	18-75	82	15	200	1500	470	84
AM3HW-4824S-NZ	18-75	82	24	125	1500	100	82

NOTE: All specifications in this datasheet are measured at an ambient temperature of 25°C, humidity<75%, nominal input voltage and at rated output load unless otherwise specified.

Input Specifications

Parameters	Nominal	Typical	Maximum	Units
Voltage range	24	9-36		VDC
	48	18-75		VDC
Filter	Capacitor			
Start up time		10		ms
Absolute Maximum Rating	24		-0.7 - 50	VDC
	48		-0.7 - 100	VDC
Peak Input Voltage time			1	s
On/Off control	ON – open or 3.5-12VDC; OFF – short to –Vin or 0-1.2VDC, Idle current: 6-10mA			
No Load Input Current	AM3HW-2424S-NZ	4	12	mA
	Others	4	7	mA
Under voltage lockout	24	6.5		VDC
	48	15.5		VDC
Input reflected ripple current	24	120		mA
	48	60		mA

Isolation Specifications

Parameters	Conditions	Typical	Maximum	Units
Tested I/O voltage	60 sec, 1mA	1500		VDC
Resistance	500VDC Isolation	>1000		MOhm
Capacitance	100KHz/0.1V	1000		pF

Output Specifications

Parameters	Conditions	Typical	Maximum	Units
Voltage accuracy		±1	±3	%
Over current protection		150	250	% of Iout
Short Circuit protection	Continuous, hiccup			
Short circuit restart	Auto-recovery			
Line voltage regulation	Full load, LL-HL	±0.2	±0.5	% of Vin
Load voltage regulation	0% to 100% load	±0.5	±1	%
Temperature coefficient			±0.03	%/°C
Ripple & Noise*	20MHz Bandwidth, 5% to 100% load	30	120	mV p-p
Transient recovery time	25% load step change	300	500	µs
Transient recovery deviation	25% load step change	±3	±5	%

*** 0-5% load up to 5% of Vout.**

General Specifications

Parameters	Conditions	Typical	Maximum	Units
Switching frequency*	100% load	350		KHz
Operating temperature	Derating above 71°C	-40 to +85		°C
Storage temperature		-55 to +125		°C
Maximum case temperature			105	°C
Cooling	Free air convection			
Humidity		>5	95	% RH
Case material	Black flame retardant heat proof plastic (UL94-V0)			
Weight		3.5		g
Dimensions (L x W x H)	0.76 x 0.71 x 0.4 inches 19.20 x 18.10 x 10.16 mm			
MTBF	>1,000,000 hours (MIL-HDBK -217F, Ground Benign, t=+25°C)			
Maximum soldering temperature	Look at the SMD soldering profile: http://www.aimtec.com/rohs-soldering-profiles			
Manual soldering temperature	1.5mm away form case for 10sec		300	°C
Moisture sensitive level (MSL)	PC/JEDEC J-STD-020D.1 Level I			

*** Switching frequency reduce when load <50% for better efficiency.**

Environment Specification

Test	Parameters	Conditions
Vibration	Test mode	10-55Hz
	Acceleration	10g, 30min, every axis tested

Safety Specifications

Parameters		
Standards	Designed to meet UL 60950-1 (only 24V input - 5, 9, 12, 15 and 24V output models) Meet EN 55032, (conducted & radiated) Class B, with the recommended EMC circuit part B	
	Electrostatic Discharge Immunity	IEC 61000-4-2, Contact ±4KV, Criteria B
	RF, Electromagnetic Field Immunity	IEC 61000-4-3, 10V/m, Criteria A
	Electrical Fast Transient / Burst Immunity	IEC 61000-4-4, ±2KV, Criteria B, with the recommended EMC circuit part A
	Surge Immunity	IEC 61000-4-5, ±2KV, Criteria B, with the recommended EMC circuit part A
	RF, Conducted Disturbance Immunity	IEC 61000-4-6, 3 Vrms, Criteria A
	Voltage dips, Short Interruptions & Voltage variations Immunity	IEC 61000-4-29: 0-70%, Criteria B

Derating

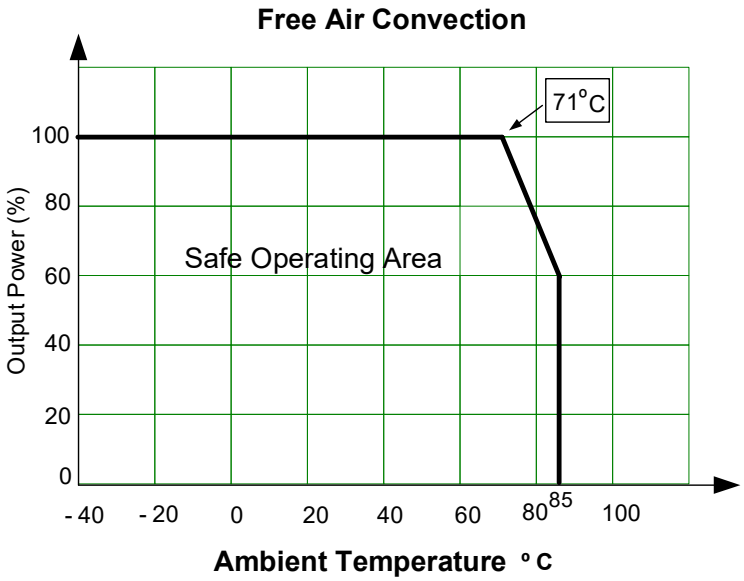

Dimensions

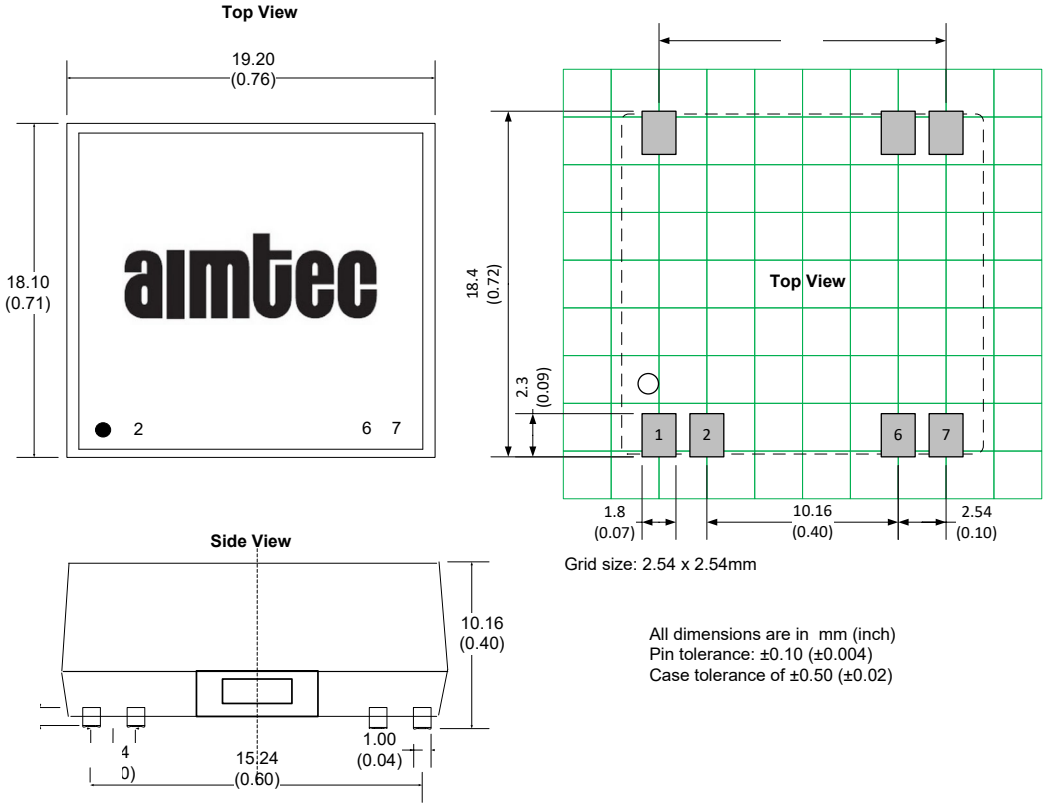

Grid size: 2.54 x 2.54mm

All dimensions are in mm (inch)
Pin tolerance: ±0.10 (±0.004)
Case tolerance of ±0.50 (±0.02)

Pin Out Specifications

Pin	Single
1	-Vin
2	On/Off Control
6	NC
7	NC
8	+Vout
9	-Vout
14	+Vin

Typical application circuit:



Model	Cin	Cout
24 Vin	100µF	10 µF
48 Vin	10µF - 47µF	

EMC recommended circuit:

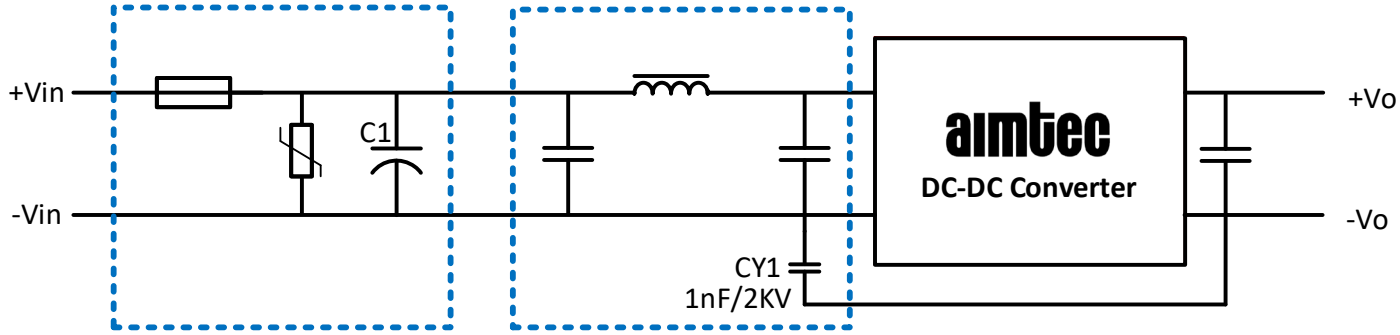

Notes: Part A for EMS filtering and Part B is for EMI filtering.

Model	MOV	C1	C2 &C3	C4
24 Vin	S20K30	680 µF / 50V	4.7 µF / 50V	10 µF
48 Vin	S14K60	680 µF / 100V	4.7 µF / 100V	

NOTE: 1. Datasheets are updated as needed and as such, specifications are subject to change without notice. Once printed or downloaded, datasheets are no longer controlled by Aimtec; refer to www.aimtec.com for the most current product specifications. **2.** Product labels shown, including safety agency certifications on labels, may vary based on the date manufactured. **3.** Mechanical drawings and specifications are for reference only. **4.** All specifications are measured at an ambient temperature of 25°C, humidity<75%, nominal input voltage and at rated output load unless otherwise specified. **5.** Aimtec may not have conducted destructive testing or chemical analysis on all internal components and chemicals at the time of publishing this document. CAS numbers and other limited information are considered proprietary and may not be available for release. **6.** This product is not designed for use in critical life support systems, equipment used in hazardous environments, nuclear control systems or other such applications which necessitate specific safety and regulatory standards other the ones listed in this datasheet. **7.** Warranty is in accordance with Aimtec's standard Terms of Sale available at www.aimtec.com.