aimtec
Your Power Partner

# Series AM3LV-NZ

## 3 Watt | DC-DC Converter




### FEATURES:

- SMD package
- Wide (2:1) input range
- 1500VDC isolation
- Continuous short circuit protection
- Operating temperature: -40°C to +85°C
- Regulated Output
- MTBF>1,000,000 hours

RoHS

## Models

### Single output

| Model | Input Voltage(V) | Output Voltage (V) | Output Current max(mA) | Isolation (VDC) | Efficiency (%) |
|---|---|---|---|---|---|
| AM3LV-1212S-NZ | 9-18 | 12 | 250 | 1500 | 77 |
| AM3LV-2405S-NZ | 18-36 | 5 | 600 | 1500 | 76 |
| AM3LV-2412S-NZ | 18-36 | 12 | 250 | 1500 | 81 |

NOTE: Unless otherwise specified, all specifications are measured at an ambient temperature of 25°C, humidity<75%, nominal input voltage and at rated output load.

**The model AM3LV-1212S-NZ is not recommended for new designs; For new design, please refer to model AM3HW-1212S-NZ.**

**The model AM3LV-2412S-NZ will be discontinued (EOL) by December 30, 2020; For new design, please refer to model AM3HW-2412S-NZ.**

## Input Specifications

| Parameters | Nominal | Typical | Maximum | Units |
|---|---|---|---|---|
| Voltage range | 12<br>24 | 9-18<br>18-36 | | VDC |
| Absolute Maximum Rating | 12<br>24 | | 25<br>50 | VDC |
| Peak Input Voltage time | | | 1 | s |
| Input Filter | | Pi (π) | | |

## Isolation Specifications

| Parameters | Conditions | Typical | Rated | Units |
|---|---|---|---|---|
| Tested I/O voltage | 60 sec, leakage current <1mA | | 1500 | VDC |
| Resistance | At 500 Vdc | 1000 | | MOhm |
| Capacitance | Input to Output, 100KHz/0.1V | 1000 | | pF |

## Output Specifications

| Parameters | Conditions | Typical | Maximum | Units |
|---|---|---|---|---|
| Voltage accuracy | | ±1 | ±3 | % |
| Short Circuit protection | Continuous | | | |
| Short circuit restart | Auto-Recovery | | | |
| Line voltage regulation | From Low in to High In | ±0.2 | ±0.4 | % |
| Load voltage regulation (Single) | From 5% to 100% load | ±0.2 | ±1 | % |
| Transient Recovery Time | 25% Load Step Change | 0.5 | 1 | m sec |
| Transient Response Deviation | 25% Load Step Change | ±2 | ±5 | % |
| Temperature coefficient | | ±0.03 | | %/ºC |
| Ripple & Noise * | 20MHz Bandwidth | 100 | | mVp-p |

***** Converters are designed to operate with a minimum load of 5%. If converter is operated with a load less than 10% the ripple will increase.

## General Specifications

| Parameters | Conditions | Typical | Maximum | Units |
|---|---|---|---|---|
| Switching frequency | 100% load, PFM mode | 350 | | KHz |
| Operating temperature | See derating curves | -40 to +85ºC | | ºC |
| Temperature Rise | Full load, 25ºC | 25ºC | | |
| Storage temperature | -55 to +125ºC | | | ºC |
| Maximum case temperature | | | 100 | ºC |
| Cooling | Free Air Convection | | | |
| Humidity | | | 95 | % RH |
| Case material | Epoxy resin (UL94-V0 rated) | | | |
| Weight | 5.2 | | | g |
| Dimensions (L x W x H) | 0.94 x 0.54 x 0.34inches 23.86 x 13.70 x 8.00 mm | | | |
| MTBF | >1,000,000 hours(MIL-HDBK -217F, Ground Benign, t=+25ºC) | | | |
| Hand Soldering Temperature | 1.5mm from case for 10 seconds | | 300 | ºC |

## Safety Specifications

| Parameters | |
|---|---|
| Standards | Meets IEC60950-1 |
| | Meet EN 55022, Class B, with external filter & EN 55024: 2010<br>IEC 61000-4-2, Contact ±4KV, Criteria B<br>IEC 61000-4-3, 10V/m, Criteria A<br>IEC 61000-4-4, ±2KV, Criteria B, with external filter<br>IEC 61000-4-5, ±2KV, Criteria B, with external filter<br>IEC 61000-4-6, 3Vrms, Criteria A<br>IEC 61000-4-29, 0-70%, Criteria B |

## Pin Out Specifications

| Pin | Single |
|---|---|
| 1 | - Vin |
| 7 | NC |
| 8 | NC |
| 9 | +Vout |
| 10 | - Vout |
| 16 | + Vin |

NC – not connected

## Dimensions

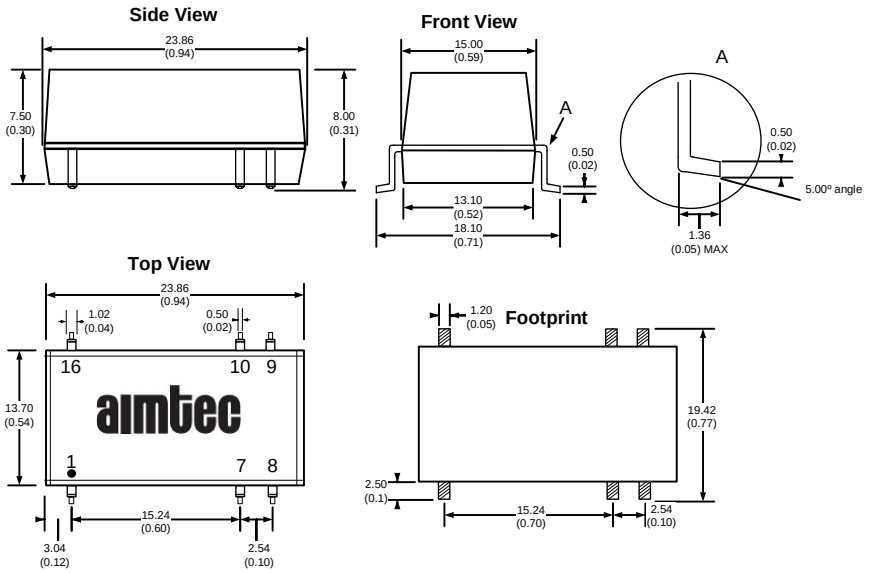


All dimensions are in millimeters (inches)
Pin Tolerance: ± 0.10 (±0.004)
Case Tolerance: ± 0.25 (±0.01)

## Recommended EMC Circuit

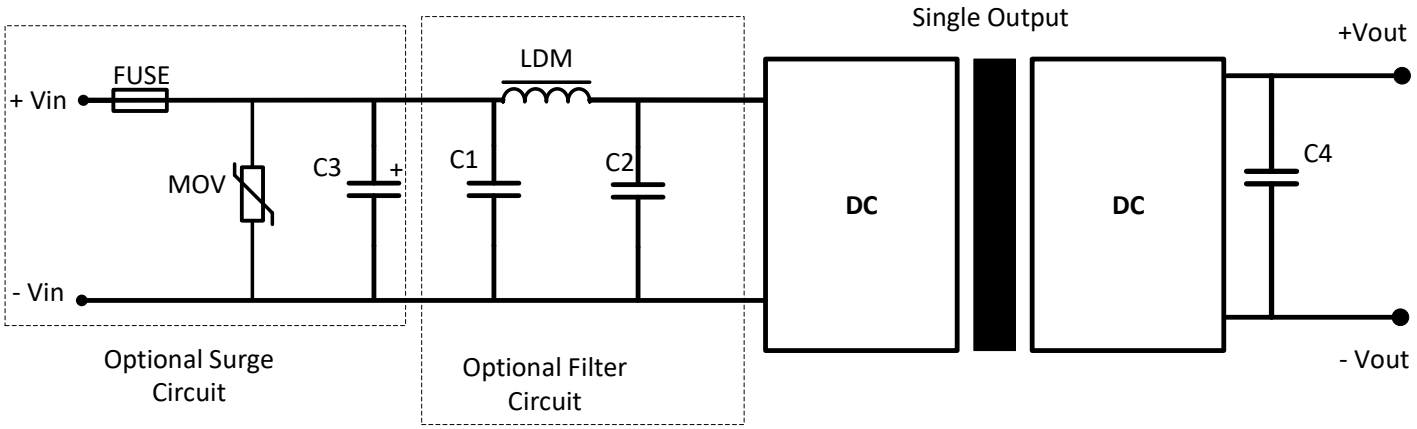


## External Capacitor Value

| Vin (VDC) | MOV | C1 & C2 | C3 | LDM | C4 |
|---|---|---|---|---|---|
| 12 | - | 4.7 µF / 50V | 680 µF / 25V | 12µH | 10 µF |
| 24 | S14K35 | 4.7 µF / 50V | 120 µF / 50V | 12µH | 10 µF |

All the AM3LV-NZ Series have been tested with the above recommended test circuit. This series should be tested under load.
If it is necessary to further decrease the input/output ripple, the value of the filter capacitor can be increased; a capacitor with a low ESR should be used. Excessive filter capacitance can cause start up problems with the converter.

Note: Fuse is user selectable

## Derating

### Single Output

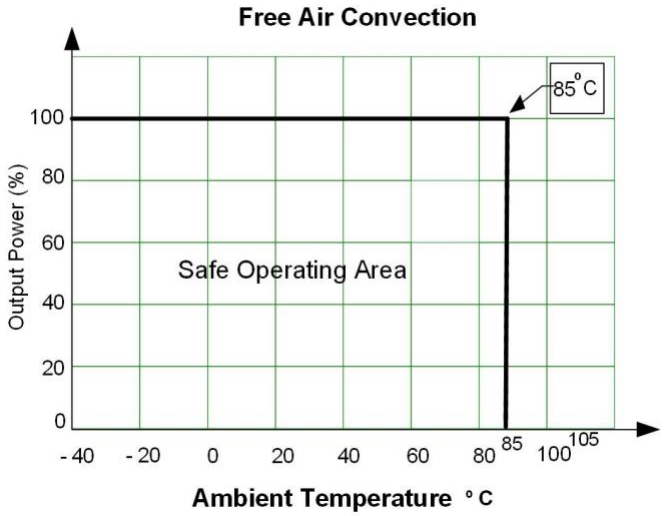


**NOTE: 1.** Datasheets are updated as needed and as such, specifications are subject to change without notice. Once printed or downloaded, datasheets are no longer controlled by Aimtec; refer to www.aimtec.com for the most current product specifications. **2.** Product labels shown, including safety agency certifications on labels, may vary based on the date manufactured. **3.** Mechanical drawings and specifications are for reference only. **4.** All specifications are measured at an ambient temperature of 25°C, humidity<75%, nominal input voltage and at rated output load unless otherwise specified. **5.** Aimtec may not have conducted destructive testing or chemical analysis on all internal components and chemicals at the time of publishing this document. CAS numbers and other limited information are considered proprietary and may not be available for release. **6.** This product is not designed for use in critical life support systems, equipment used in hazardous environments, nuclear control systems or other such applications which necessitate specific safety and regulatory standards other the ones listed in this datasheet. **7.** Warranty is in accordance with Aimtec's standard Terms of Sale available at www.aimtec.com.