AM3PR-NZ

Click to ORDER samples



DIP/SMD

The AM3PR-NZ is a DC/DC converter that offers a regulated output which contributes to more stable and reliable output performance. Offering a common DIP8 package and a SMD option for satisfying the requirement of compact size. Featuring a 2:1 input voltage range of 9-18VDC/18-36VDC and 1500VDC isolation, this series will offer many benefits to your new system design.

This new series offers great operating temperatures, from -40°C to 85°C with no derating. Furthermore, a high MTBF of 1,000,000h, continuous output short circuit protection (OSCP), under voltage lock-out come standard with the series.

The AM1PR-NZ is perfect for grid power, LED, instrumentation, industrial controls, communication, and civil applications.

Features

- Operating Temp: -40 °C to +85 °C
- Isolation voltage: 1500VDC
- High efficiency: Up to 83% typ.
- Regulated single and dual output
- Continuous output short circuit protection
- Compact DIP and SMD package
- Design to meet EN62368

RoHS

3yr Warranty

Summary

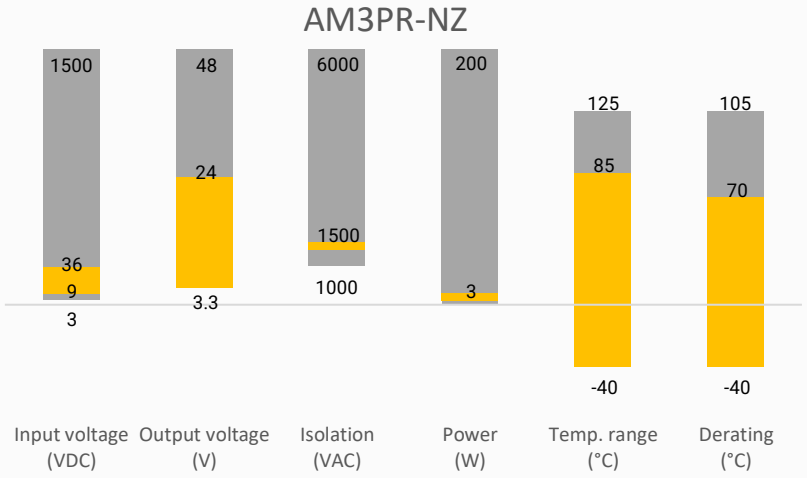

Training

Product Training Video (click to open)

Press Release

Coming Soon!

Application Notes

Applications

Power Grid

Industrial

Telecom

Instrumentation

Models & Specifications

Single Output

Model	Input Voltage (VDC)	Output Voltage (VDC)	Nominal Vin Input Current Max (mA)		Output Current Max (A)	Maximum Capacitive Load (µF)	Efficiency Full Load Typ (%)
			No Load	Full Load			
AM3PR-1203SNZ	12 (9-18)	3.3	50	338	758	2700	75
AM3PR-1205SNZ	12 (9-18)	5	50	338	600	2200	79
AM3PR-1212SNZ	12 (9-18)	12	50	338	250	680	82
AM3PR-1215SNZ	12 (9-18)	15	50	338	200	470	83
AM3PR-1224SNZ	12 (9-18)	24	50	338	125	330	81
AM3PR-2403SNZ	24 (18-36)	3.3	40	163	758	2700	74
AM3PR-2405SNZ	24 (18-36)	5	40	163	600	2200	81
AM3PR-2412SNZ	24 (18-36)	12	40	163	250	680	83
AM3PR-2415SNZ	24 (18-36)	15	40	163	200	470	83
AM3PR-2424SNZ	24 (18-36)	24	40	163	125	330	83
AM3PRL-1203SNZ	12 (9-18)	3.3	50	338	758	2700	75
AM3PRL-1205SNZ	12 (9-18)	5	50	338	600	2200	79
AM3PRL-1212SNZ	12 (9-18)	12	50	338	250	680	82
AM3PRL-1215SNZ	12 (9-18)	15	50	338	200	470	83
AM3PRL-1224SNZ	12 (9-18)	24	50	338	125	330	81
AM3PRL-2403SNZ	24 (18-36)	3.3	40	163	758	2700	74
AM3PRL-2405SNZ	24 (18-36)	5	40	163	600	2200	81
AM3PRL-2412SNZ	24 (18-36)	12	40	163	250	680	83
AM3PRL-2415SNZ	24 (18-36)	15	40	163	200	470	83
AM3PRL-2424SNZ	24 (18-36)	24	40	163	125	330	83

Note: Use prefix “L” for SMD package (ex. AM3PRL-1205SNZ).

Dual Output

Model	Input Voltage (VDC)	Output Voltage (VDC)	Nominal Vin Input Current Max (mA)		Output Current Max (mA)	Maximum Capacitive Load (µF)	Efficiency Full Load Typ (%)
			No Load	Full Load			
AM3PR-1205DNZ	12 (9-18)	±5	50	329	±300	1000	78
AM3PR-1209DNZ	12 (9-18)	±9	50	329	±167	680	78
AM3PR-1212DNZ	12 (9-18)	±12	50	329	±125	470	79
AM3PR-1215DNZ	12 (9-18)	±15	50	329	±100	330	79
AM3PR-2405DNZ	24 (18-36)	±5	40	165	±300	1000	78
AM3PR-2409DNZ	24 (18-36)	±9	40	165	±167	680	80
AM3PR-2412DNZ	24 (18-36)	±12	40	165	±125	470	82
AM3PR-2415DNZ	24 (18-36)	±15	40	165	±100	330	81
AM3PRL-1205DNZ	12 (9-18)	±5	50	329	±300	1000	78
AM3PRL-1209DNZ	12 (9-18)	±9	50	329	±167	680	78
AM3PRL-1212DNZ	12 (9-18)	±12	50	329	±125	470	79
AM3PRL-1215DNZ	12 (9-18)	±15	50	329	±100	330	79
AM3PRL-2405DNZ	24 (18-36)	±5	40	165	±300	1000	78
AM3PRL-2409DNZ	24 (18-36)	±9	40	165	±167	680	80
AM3PRL-2412DNZ	24 (18-36)	±12	40	165	±125	470	82
AM3PRL-2415DNZ	24 (18-36)	±15	40	165	±100	330	81

Note: Use prefix “L” for SMD package (ex. AM3PRL-1205DNZ).

Input Specification

Parameters	Conditions	Typical	Maximum	Units
Input voltage	Nominal 12V	9-18	20	VDC
	Nominal 24V	18-36	40	VDC
Absolute maximum rating	Nominal 12V, 1s max.	≥-0.7	25	VDC
	Nominal 24V, 1s max.	≥-0.7	50	VDC
Start-up voltage	Nominal 12V		9	VDC
	Nominal 24V		18	VDC
Input reflected current	Nominal 12V	40		mA
	Nominal 24V	55		mA
Input filter	Capacitor filter			

Isolation Specification

Parameters	Conditions	Typical	Maximum	Units
Tested isolation voltage	Input / output 60 sec, ≤ 1mA	≥1500		VDC
Resistance	500VDC	≥1000		MΩ
Capacitance	100KHz / 0.1V	100		pF

Output Specification

Parameters	Conditions	Typical	Maximum	Units
Voltage accuracy	5% -100% load, single and dual output 1	±1	±3	%
	5% -100% load, output 2	±3	±5	%
	0% load, single output, 3.3Vout	±5	±7	%
	0% load, single output, others	±1.5	±5	%
	0% load, dual output, output 1	±2	±5	%
	0% load, dual output, output 2	±5	±8	%
Line regulation	LL – HL 100% load, single and dual output, output 1	±0.2	±0.5	%
	LL – HL 100% load, dual output, output 2	±0.5	±1	%
Load regulation	5% -100% load, single and dual output 1	±0.5	±1	%
	5% -100% load, output 2		±3	%
Short circuit protection	Continues, Auto recovery			
Transient Recovery Time	25% load step change	1	3	ms
Transient Response Deviation	25% load step change, single output	±2.5	±5	%
	25% load step change, dual output	±3	±5	%
Ripple & Noise	20MHz bandwidth, 5% -100% load	50	100	mV pk-pk
Minimum load		5		%

General Specifications

Parameters	Conditions	Typical	Maximum	Units
Switching frequency		300		KHz
Operating temperature	With derating	-40 to +85		°C
Storage temperature		-55 to +125		°C
Soldering temperature	1.5mm distance, ≤ 10s		300	°C
Reflow temperature	Over 217°C for less than 60s		245	°C
Reflow method	IPC/JEDEC J-STD-020D.1.			
Temperature coefficient	100% Load		± 0.03	%/ °C
Cooling	Free air convection			

Humidity	Non-condensing	≥5	95	% RH
Weight		2.2		g
Dimensions (L x W x H)	DIP	0.55 x 0.55 x 0.35 inches (14.0 x 14.0 x 9.0 mm)		
	SMD	0.59 x 0.55 x 0.36 inches (15.0 x 14.0 x 9.1 mm)		
Case material	Black plastic			
MTBF	≥ 1 000 000 hrs (MIL-HDBK -217F, t=+25°C)			
NOTE: All specifications in this datasheet are measured at an ambient temperature of 25°C, humidity<75%, nominal input voltage and at rated output load unless otherwise specified.				

Safety Specifications		
Parameters		
Standards	Design to meet EN62368	
	EMI - Conducted and radiated emission	CISPR32/EN55032 Class B with the recommended EMC circuit part B
	Electrostatic Discharge Immunity	IEC/EN 61000-4-2, Contact ±6KV, Criteria B
	RF, Electromagnetic Field Immunity	IEC/EN 61000-4-3, 10V/m, Criteria A
	Electrical Fast Transient/Burst Immunity	IEC/EN 61000-4-4, ±2KV, Criteria B with the recommended EMC circuit part A
	Surge Immunity	IEC/EN 61000-4-5, L-L ±2KV, Criteria B with the recommended EMC circuit part A
	RF, Conducted Disturbance Immunity	IEC/EN 61000-4-6, 3Vr.m.s, Criteria A

Derating

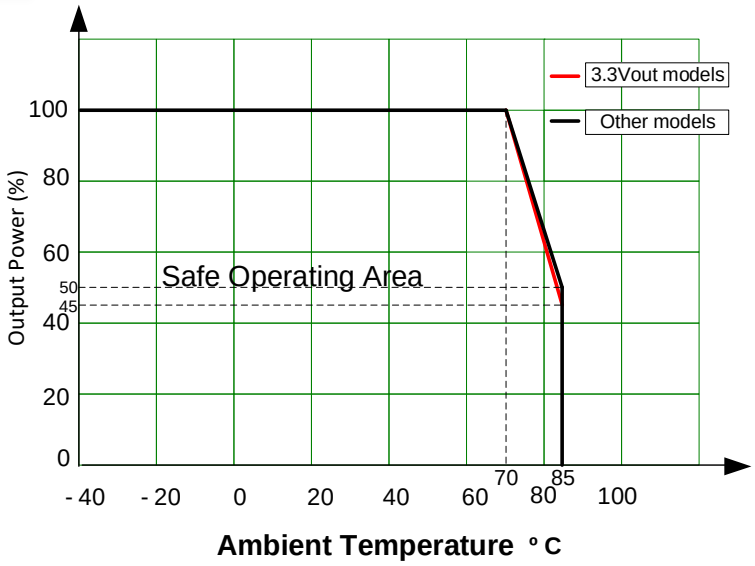

Typical application circuit

Single output models

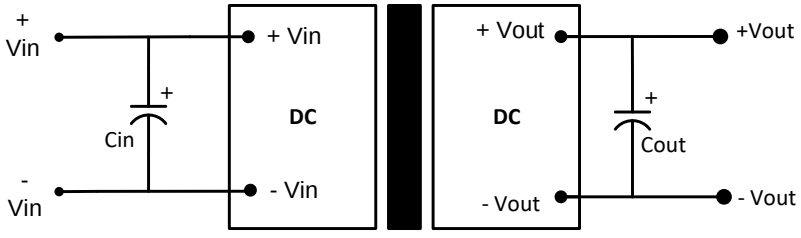

Single output	
Vin	Cin
12	47µF/25V
24	47µF/50V

Single output	
Vout	Cout
3.3/5	100µF/6.3V
12/15/24	27µF/35V

Dual output models

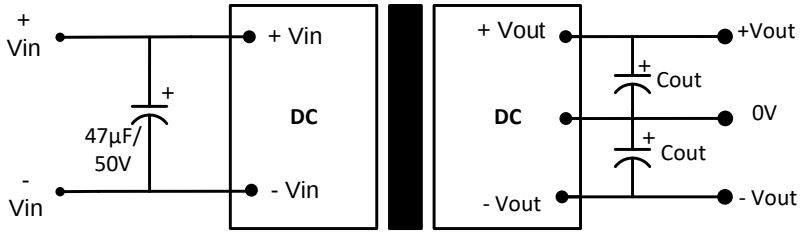

Dual output	
Vout	Cout
±5/ ±9	47µF/16V
±12/ ±15	10µF/25V

Recommended EMC circuit

Single output models

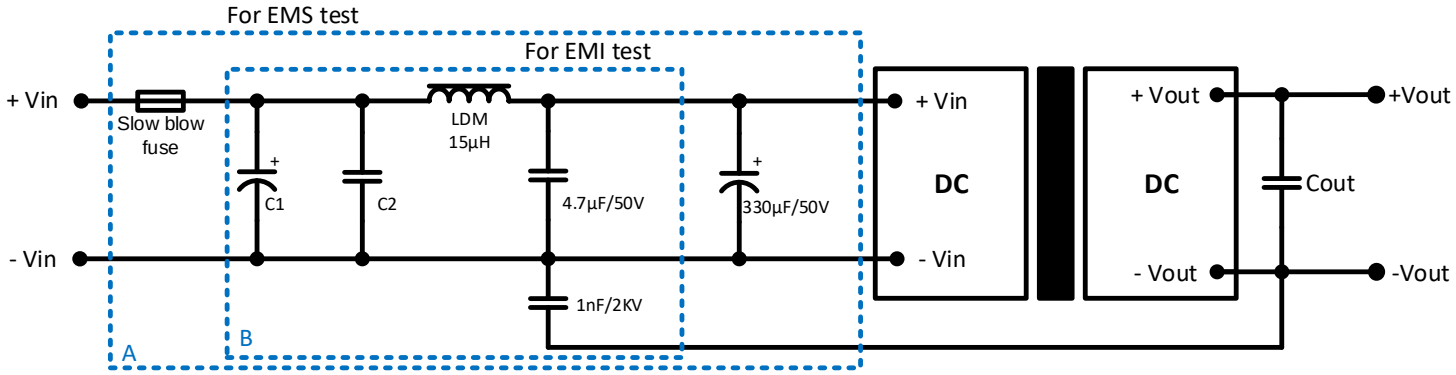

Vin	Vout	C1	C2
12	3.3/5	1000µF/25V	10µF/50V
	12/15/24	1000µF/25V	4.7µF/50V
24	3.3/5	680µF/50V	10µF/50V
	12/15/24	680µF/50V	4.7µF/50V

Dual output models

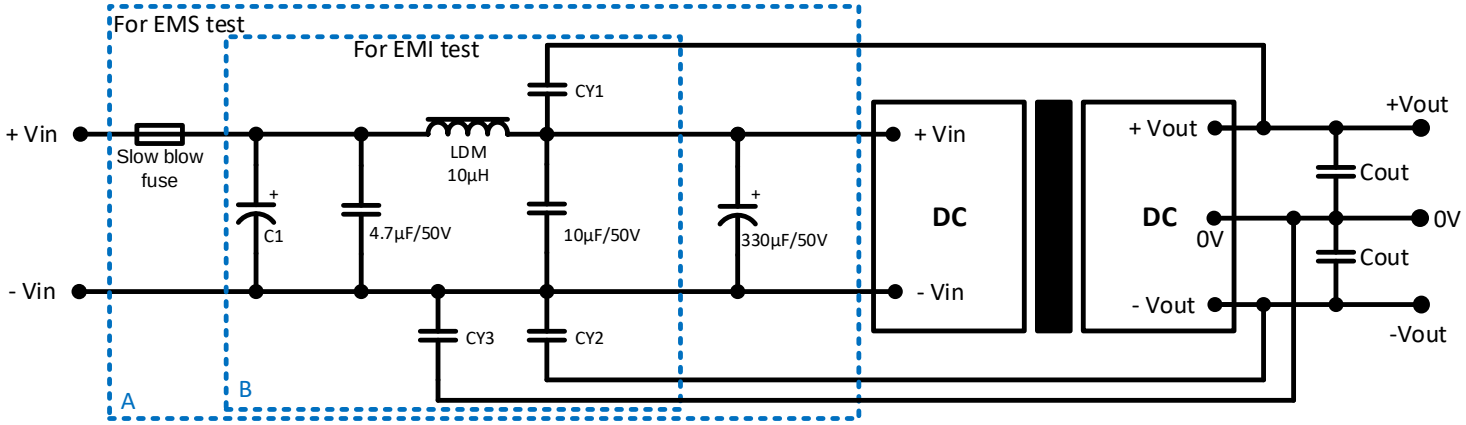

Vin	Vout	C1	CY1	CY2	CY3
12	±5/ ±9/ ±12	1000µF/25V	1nF/2000V	1nF/2000V	1nF/2000V
	±15	1000µF/25V	470pF/2000V	470pF/2000V	470pF/2000V
24	±5/ ±9/ ±12/ ±15	680µF/50V	1nF/2000V	1nF/2000V	-

Dimension

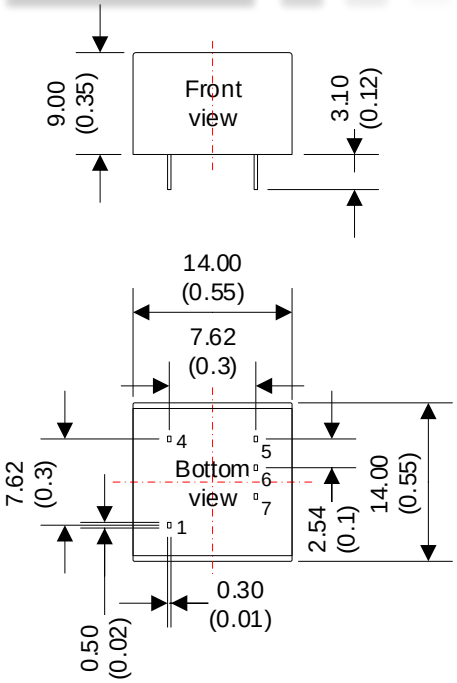

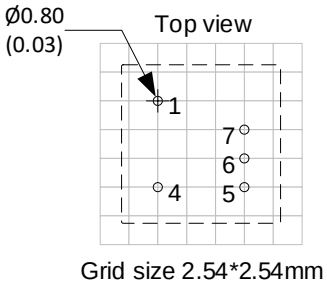

Grid size 2.54*2.54mm

Pin Out Specifications		
Pin	Single	Dual
1	-Vin	-Vin
4	+Vin	+Vin
5	+Vout	+Vout
6	NC	0V
7	-Vout	-Vout

Dimensions: mm (inch)
General Tolerance: ±0.50 (0.02)
Pin diameter Tolerance: ±0.10 (0.004)

Dimension for L models

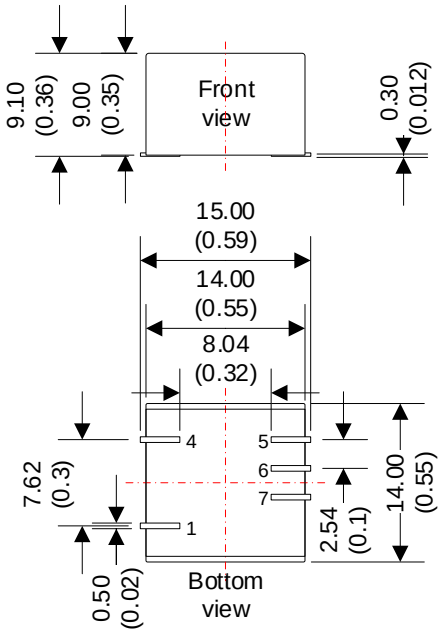

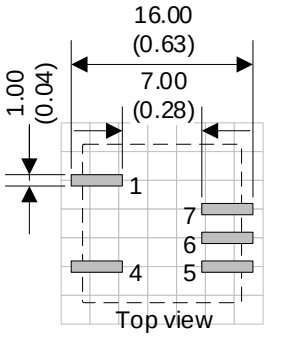

Grid size 2.54*2.54mm

Dimensions: mm (inch)
General Tolerance: ±0.50 (0.02)
Pin diameter Tolerance: ±0.10 (0.004)

NOTE: 1. Datasheets are updated as needed and as such, specifications are subject to change without notice. Once printed or downloaded, datasheets are no longer controlled by Aimtec; refer to www.aimtec.com for the most current product specifications. **2.** Product labels shown, including safety agency certifications on labels, may vary based on the date manufactured. **3.** Mechanical drawings and specifications are for reference only. **4.** All specifications are measured at an ambient temperature of 25°C, humidity<75%, nominal input voltage and at rated output load unless otherwise specified. **5.** Aimtec may not have conducted destructive testing or chemical analysis on all internal components and chemicals at the time of publishing this document. CAS numbers and other limited information are considered proprietary and may not be available for release. **6.** This product is not designed for use in critical life support systems, equipment used in hazardous environments, nuclear control systems or other such applications which necessitate specific safety and regulatory standards other the ones listed in this datasheet. **7.** Warranty is in accordance with Aimtec's standard Terms of Sale available at www.aimtec.com.