Click to ORDER samples

AM3T-LPZ



24PIN DIP Package

The AM3T-LPZ is a 3W 24PIN DIP DC/DC converter that offers great cost savings thanks to an improved manufacturing process. It also features excellent reliability and performance while offering a standard input voltage range of 4.5-75VDC as well as an output voltage of -24 to 24V. This compact 24PIN DIP design will surely benefit your new system design.

This new series offers a great operating temperature range from -40 to 85°C. Also, an isolation of 1500VDC for improved reliability and system safety.

The AM3T-LPZ is suitable for many applications such as industrial systems, portable equipment, and internet of things.

Features

- Continuous Short circuit protection
- Operating Temp: -40 °C to +85 °C
- Industry standard 24PIN DIP pin-out
- Efficiency up to 86%
- Regulated output
- 2:1 Input Voltages Range

Summary

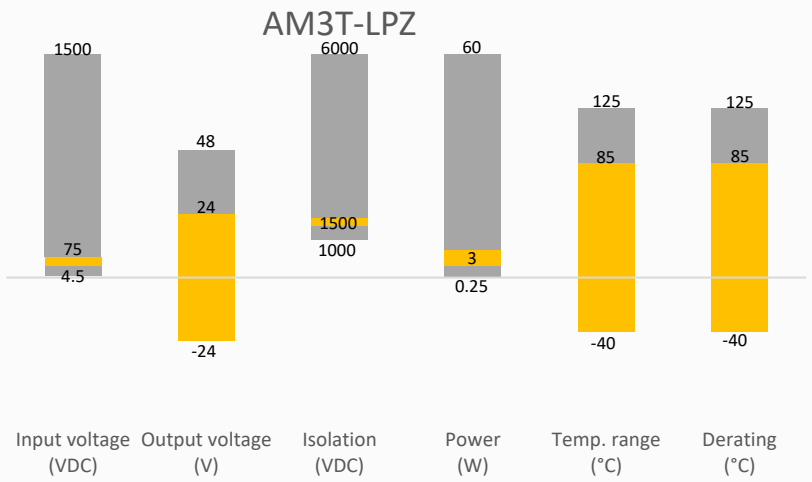

RoHS

3yr Warranty

Training

Product Training Video (click to open)

Press Release

Coming Soon!

Application Notes

Applications

Industrial

Portable Equipment

IoT

Models & Specifications

Single Output								
Model	Input Voltage (VDC)	Output Voltage (VDC)	Output Current max (mA)	Input Current		Efficiency Typ. (%)	Maximum Capacitive Load (µF)	Isolation (VDC)
				No Load mA	Full Load mA			
AM3T-0505SLPZ	5 (4.5-9)	5	600	40	789	74	4700	1500
AM3T-0512SLPZ	5 (4.5-9)	12	250	40	789	77	2700	1500
AM3T-0515SLPZ	5 (4.5-9)	15	200	40	789	77	2200	1500
AM3T-1203SLPZ	12 (9-18)	3.3	909	30	316	74	4700	1500
AM3T-1205SLPZ	12 (9-18)	5	600	30	316	81	4700	1500
AM3T-1212SLPZ	12 (9-18)	12	250	30	316	83	2700	1500
AM3T-1215SLPZ	12 (9-18)	15	200	30	316	82	2200	1500
AM3T-1224SLPZ	12 (9-18)	24	125	30	316	83	1800	1500
AM3T-2403SLPZ	24 (18-36)	3.3	909	15	152	78	4700	1500
AM3T-2405SLPZ	24 (18-36)	5	600	15	152	81	4700	1500
AM3T-2409SLPZ	24 (18-36)	9	333	15	152	81	2700	1500
AM3T-2412SLPZ	24 (18-36)	12	250	15	152	86	2700	1500
AM3T-2415SLPZ	24 (18-36)	15	200	15	152	86	2200	1500
AM3T-2424SLPZ	24 (18-36)	24	125	15	152	85	1800	1500
AM3T-4803SLPZ	48 (36-75)	3.3	909	5	77	76	4700	1500
AM3T-4805SLPZ	48 (36-75)	5	600	5	77	82	4700	1500
AM3T-4812SLPZ	48 (36-75)	12	250	5	77	86	2700	1500
AM3T-4815SLPZ	48 (36-75)	15	200	5	77	86	2200	1500

Dual Output								
Model	Input Voltage (VDC)	Output Voltage (VDC)	Output Current max (mA)	Input Current		Efficiency Typ. (%)	Maximum Capacitive Load (µF)	Isolation (VDC)
				No Load mA	Full Load mA			
AM3T-0505DLPZ	5 (4.5-9)	±5	±300	40	789	76	2200	1500
AM3T-0509DLPZ	5 (4.5-9)	±9	±166	40	789	76	1800	1500
AM3T-0512DLPZ	5 (4.5-9)	±12	±125	40	789	78	1800	1500
AM3T-0515DLPZ	5 (4.5-9)	±15	±100	40	789	78	1000	1500
AM3T-1205DLPZ	12 (9-18)	±5	±300	30	316	81	2200	1500
AM3T-1209DLPZ	12 (9-18)	±9	±166	30	316	84	2000	1500
AM3T-1212DLPZ	12 (9-18)	±12	±125	30	316	84	1800	1500
AM3T-1215DLPZ	12 (9-18)	±15	±100	30	316	85	1000	1500
AM3T-2405DLPZ	24 (18-36)	±5	±300	15	152	82	2200	1500
AM3T-2412DLPZ	24 (18-36)	±12	±125	15	152	84	1800	1500
AM3T-2415DLPZ	24 (18-36)	±15	±100	15	152	84	1000	1500
AM3T-4805DLPZ	48 (36-75)	±5	±300	5	77	82	2200	1500
AM3T-4812DLPZ	48 (36-75)	±12	±125	5	77	84	1800	1500
AM3T-4815DLPZ	48 (36-75)	±15	±100	5	77	85	1000	1500

Input Specification				
Parameters	Conditions	Typical	Maximum	Units
Filter	Pi filter			
Voltage Types			2:1	
Startup Input Voltage*	5Vin models		4.5	VDC

	12Vin models		9	VDC
	24Vin models		18	VDC
	48Vin models		36	VDC
Absolute maximum rating	5Vin models, 1sec. max.	≥-0.7	12	VDC
	12Vin models, 1sec. max.	≥-0.7	25	VDC
	24Vin models, 1sec. max.	≥-0.7	50	VDC
	48Vin models, 1sec. max.	≥-0.7	100	VDC
*Operating with less than 5% of rated load will not cause permanent damage to the converters, but the performance data may not fall into the specifications, and stable operating is not assured.				

Isolation Specification

Parameters	Conditions	Minimum	Typical	Maximum	Units
Tested I/O voltage	60 sec, leakage ≤ 1mA		1500		VDC
Resistance	500VDC	1000			MΩ
Capacitance	Input / output, 100KHz / 0.1V		1000		pF

Output Specification

Parameters	Conditions	Typical	Maximum	Units
Voltage Tolerance	5~100% load	±1	±3	%
	No load	±1.5	±5	%
Line Regulation	Full load	±0.2	±0.5	%
Load regulation	5~100% load	±0.2	±0.5	%
Ripple & Noise*	24Vout model	100	120	mV p-p
	Others	60	100	mV p-p
Temperature Coefficient	Full load	±0.02	±0.03	%/°C
Transient recovery time	25% load step change	500	2000	us
Transient recovery deviation	25% load step change	±2	±5	%
* Ripple and Noise are measured at 20MHz bandwidth. Please refer to the application note for specific details.				

General Specifications

Parameters	Conditions	Typical	Maximum	Units
Switching frequency		250		KHz
Short circuit protection	Continuous, auto-recovery			
Operating temperature	Derating when operating temperature ≥85°C	-40 to +85		°C
Storage temperature		-55 to +125		°C
Cooling	Free air convection			
Humidity	Non-condensing		95	% RH
Maximum soldering temperature	1.5mm from case for 10 sec		+300	°C
Case material	Aluminum alloy			
Weight		14		g
Dimensions (L x W x H)	1.26 x 0.79 x 0.44 inches (32.0 x 20.0 x 11.1 mm)			
MTBF	> 1 000 000 hrs (MIL-HDBK -217F, t=+25°C) / Full Load			
NOTE: All specifications in this datasheet are measured at an ambient temperature of 25°C, humidity<75%, nominal input voltage and at rated output load unless otherwise specified.				

Safety Specifications		
Parameters		
Standards	Designed to meet UL/EN/IEC62368-1	
	EMI - Conducted and radiated emission	CISPR32/EN55032 Class B with recommended EMC circuit
	Electrostatic Discharge Immunity	IEC/EN 61000-4-2
	RF, Electromagnetic Field Immunity	IEC/EN 61000-4-3
	Electrical Fast Transient/Burst Immunity	IEC/EN 61000-4-4
	Surge Immunity	IEC/EN 61000-4-5
	RF, Conducted Disturbance Immunity	IEC/EN 61000-4-6
	Voltage dips, Short Interruptions & Voltage variations Immunity	IEC/EN 61000-4-29

Derating

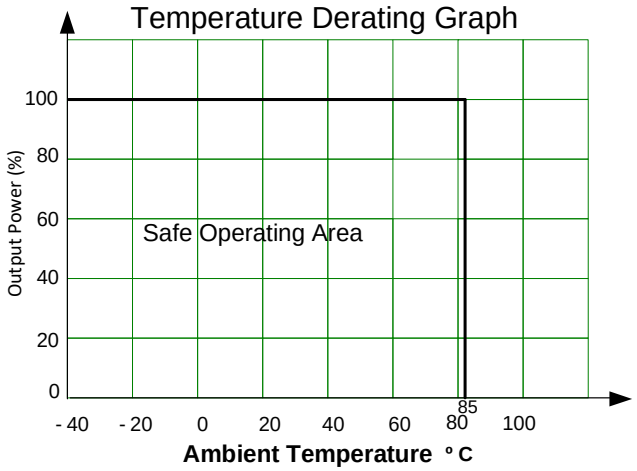

Typical application circuit

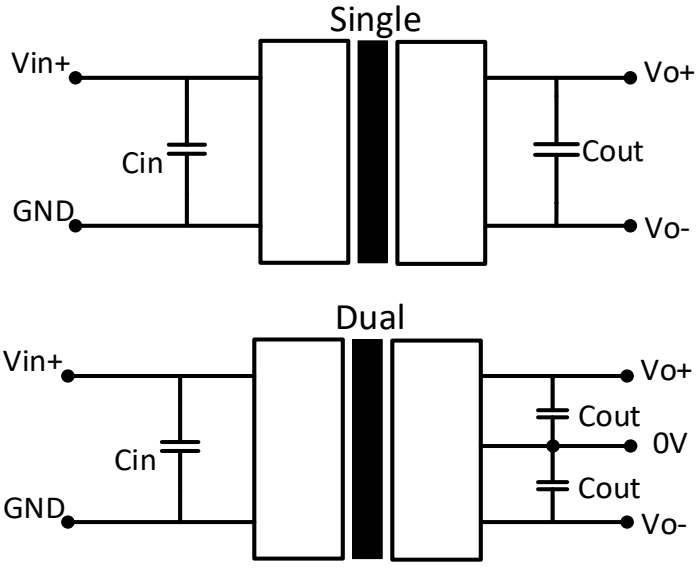

Vin	Cin	Cout
5VDC	100µF	10µF
12VDC	100µF	
24VDC	10-47µF	
48VDC	10-47µF	

EMC (CLASS B) Compliance Circuit

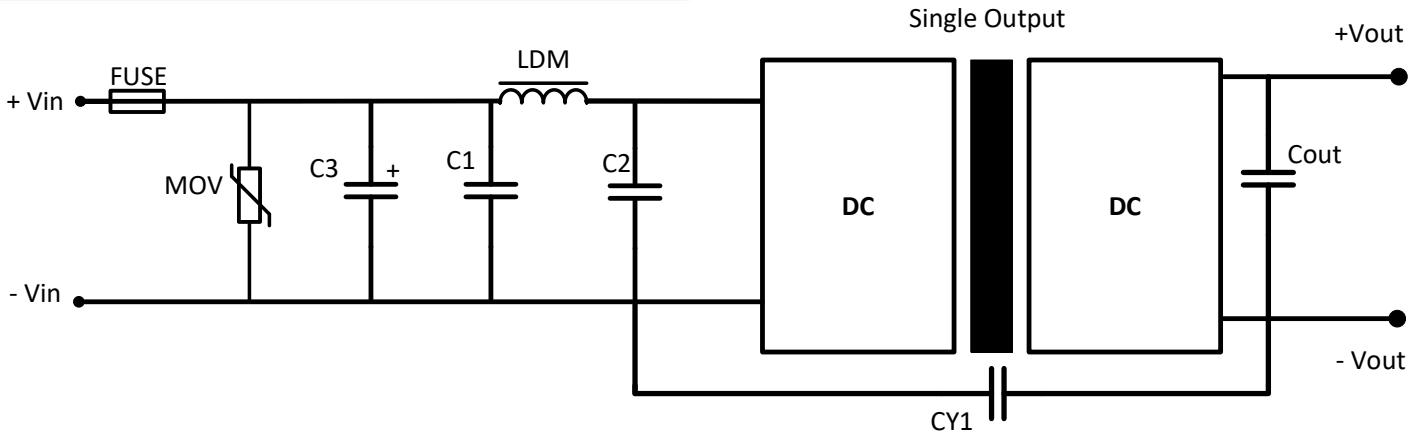

Model	C1 & C2	C3	Cout	LDM	MOV	CY1
5Vin	4.7μF/50V	1000μF/16V	10μF	12μH	-	1nF/2KV
12Vin	4.7μF/50V	1000μF/25V			14D330K	
24Vin	4.7μF/50V	330μF/50V			20D470K	
48Vin	4.7μF/100V	330μF/100V			14D101K	

FUSE：Choose according to actual input current

Dimensions

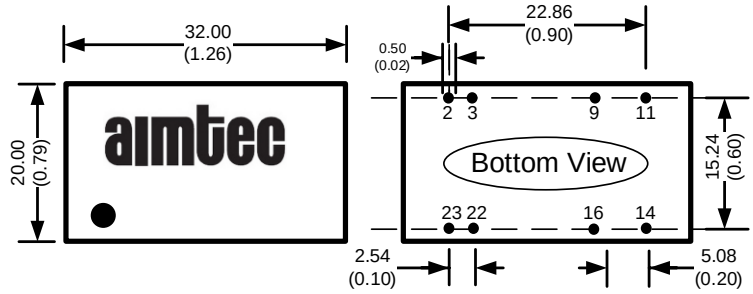

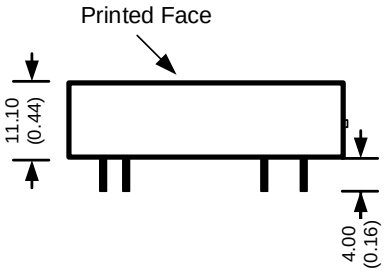

All dimensions are typical: millimeters (inches)
Pin Pitch Tolerance: ±0.10 (±0.004)
Case Tolerance: ±0.5 (±0.02)

Pin Out Specifications		
Pin	Single output	Dual output
2	-V Input	-V Input
3	-V Input	-V Input
9	No Pin	Common
11	NC	-V Output
14	+V Output	+V Output
16	-V Output	Common
22	+V Input	+V Input
23	+V Input	+V Input

NOTE: 1. Datasheets are updated as needed and as such, specifications are subject to change without notice. Once printed or downloaded, datasheets are no longer controlled by Aimtec; refer to www.aimtec.com for the most current product specifications. **2.** Product labels shown, including safety agency certifications on labels, may vary based on the date manufactured. **3.** Mechanical drawings and specifications are for reference only. **4.** All specifications are measured at an ambient temperature of 25°C, humidity<75%, nominal input voltage and at rated output load unless otherwise specified. **5.** Aimtec may not have conducted destructive testing or chemical analysis on all internal components and chemicals at the time of publishing this document. CAS numbers and other limited information are considered proprietary and may not be available for release. **6.** This product is not designed for use in critical life support systems, equipment used in hazardous environments, nuclear control systems or other such applications which necessitate specific safety and regulatory standards other the ones listed in this datasheet. **7.** Warranty is in accordance with Aimtec's standard Terms of Sale available at www.aimtec.com.